This is a digital copy of a book that was preserved for generations on library shelves before it was carefully scanned by Google as part of a project to make the world's books discoverable online.

It has survived long enough for the copyright to expire and the book to enter the public domain. A public domain book is one that was never subject to copyright or whose legal copyright term has expired. Whether a book is in the public domain may vary country to country. Public domain books are our gateways to the past, representing a wealth of history, culture and knowledge that's often difficult to discover.

Marks, notations and other marginalia present in the original volume will appear in this file - a reminder of this book's long journey from the publisher to a library and finally to you.

Usage guidelines

Google is proud to partner with libraries to digitize public domain materials and make them widely accessible. Public domain books belong to the public and we are merely their custodians. Nevertheless, this work is expensive, so in order to keep providing this resource, we have taken steps to prevent abuse by commercial parties, including placing technical restrictions on automated querying.

We also ask that you:

+ *Make non-commercial use of the files* We designed Google Book Search for use by individuals, and we request that you use these files for personal, non-commercial purposes.

+ *Refrain from automated querying* Do not send automated queries of any sort to Google's system: If you are conducting research on machine translation, optical character recognition or other areas where access to a large amount of text is helpful, please contact us. We encourage the use of public domain materials for these purposes and may be able to help.

+ *Maintain attribution* The Google "watermark" you see on each file is essential for informing people about this project and helping them find additional materials through Google Book Search. Please do not remove it.

+ *Keep it legal* Whatever your use, remember that you are responsible for ensuring that what you are doing is legal. Do not assume that just because we believe a book is in the public domain for users in the United States, that the work is also in the public domain for users in other countries. Whether a book is still in copyright varies from country to country, and we can't offer guidance on whether any specific use of any specific book is allowed. Please do not assume that a book's appearance in Google Book Search means it can be used in any manner anywhere in the world. Copyright infringement liability can be quite severe.

About Google Book Search

Google's mission is to organize the world's information and to make it universally accessible and useful. Google Book Search helps readers discover the world's books while helping authors and publishers reach new audiences. You can search through the full text of this book on the web at http://books.google.com/

Text-book of ordnance and gunnery

William Harvey Tschappat

Digitized by Google

Digitized by Google

Ac—
650

Library
UF
145
.T88

Digitized by Google

Digitized by Google

Digitized by Google

Digitized by Google

TEXT-BOOK

OF

ORDNANCE AND GUNNERY

BY

LT.-COL. WILLIAM H. TSCHAPPAT

ORD. DEPT., U. S. A.

FIRST EDITION

NEW YORK

JOHN WILEY & SONS, INC.

LONDON: CHAPMAN & HALL, LIMITED

1917

Digitized by Google

COPYRIGHT, 1917
BY
W. H. TSCHAPPAT

PRESS OF
BRAUNWORTH & CO.
BOOK MANUFACTURERS
BROOKLYN, N. Y.

Digitized by Google

0 247 218

PREFACE

THIS text is designed for the use of the senior class at the U. S. Military Academy or for students who have had an equal amount of mathematical training.

The present book is largely a revision of Lissak's "Ordnance and Gunnery," used for several years at the Military Academy, a number of the chapters having been taken almost verbatim from that excellent text.

For the chapter on explosives and interior ballistics the author takes full responsibility.

The chapter on exterior ballistics is taken, with very slight changes, from a pamphlet on that subject, prepared several years ago by Lt.-Col. E. P. O'Hern, Ord. Dept., and used for some years at the Military Academy.

The thanks of the author are due to Major R. H. Somers, Ord. Dept., for the method of treatment used in the section on the elastic strength of guns and for many other valuable suggestions as well as for many illustrations.

The author is also indebted to the following officers for suggestions, illustrations or proofreading:

Major Earl McFarland, Ord. Dept.,
Capt. Richard Donavan, C. A. C.,
Capt. Thruston Hughes, C. A. C.,
Capt. Claude B. Thummel, Ord. Dept.,
Capt. Harvey E. Hobbs, F. A.,
Capt. John G. Booton, C. A. C.,
Lt. Thomas J. Hayes, Infantry,
Capt. John S. Wood, Ord. Dept.,
Lt. David McL. Crawford, C. A. C.

318008

Digitized by Google

Most of the illustrations taken from "Lissak's Ordnance and Gunnery" and some of the new ones introduced were made from drawings prepared by Sergeant Carl A. Shopper, U.S.M.A. Detachment of Ordnance.

WILLIAM H. TSCHAPPAT.

WEST POINT, N. Y.,
July 1, 1917.

Digitized by Google

CONTENTS

(Figures refer to paragraph numbers)

CHAPTER I

PROPERTIES, MANUFACTURE, CARE AND USE OF EXPLOSIVES

Definitions, 1. Effects of Explosion, 2. Examples of Two Classes of Explosives, 3. Conditions that Influence Explosion, 4. Primers, Fuses and Detonating Caps, 5. Uses of the Two Classes of Explosives, 6. General Requirements of Explosives for use as Propelling Charges in Guns, 7. Requirements of High Explosives for Projectiles, 8. Historical Sketch of Development of Gunpowder, 10. Charcoal Powders, 11. Smokeless Powders, 12. Formation and Classification of Nitrocelluloses, 13. Raw Materials, 14. Preparation of Cotton, 15. Nitrating Processes, 16. Boiling Processes, 17. Principle Underlying the Manufacture of Smokeless Powder from Nitrocellulose, 18. Dehydrating, Mixing, Blocking and Graining, 19. Drying, Solvent Recovery and Blending, 20. Determination of Moisture and Volatiles, 21, 22. Special Tests for Stability, 22. Measurement of Grains, Physical Test, 23. Ballistic Test, 24. Effect of Moisture, 25. Effect of High Temperature, 26. Forms of Propelling Charges, 27. Cartridge Bags, 28. Central Core Igniting Charge, 29. Blank Charge, 30.

CHAPTER II

THEORY OF EXPLOSIVES

Object of Theoretical Calculations, 31. Practical Determination of the Quantity of Heat, 32. Heats of Formation, 33. Principle of the Initial and Final State, 34. Theoretical Determination of Quantity of Heat at Constant Pressure, 35. Properties of Gases, 36. Laws of Perfect Gases, 37. Characteristic Equation of Perfect Gases, 38. Characteristic Equation of Actual Gases, 39. Co-volume, 40. Modification of the Laws of Perfect Gases for Application to Actual Gases, 41. Thermodynamics of Gases, 42. Determination of External Work of Expansion, 43. Relation between Heat and Work in the Expansion of Gases, 44. Adiabatic Expansion, 45. Relation between Pressure, Volume of Temperature in Adiabatic Expansion when c_p and c_v are Constant, 46. Application of the Laws of Adiabatic Expansion to the Gases of Explosives, 47. Quantity of Heat at Constant Volume, 48. Potential, 49. Temperature of Explosion, 50. Temperature when Solid Products are Formed, 51. Density of Explosives, 52. Gravimetric Density, 53. Density of Loading, 54. Pressure in a Closed Chamber, 55.

Digitized by Google

CHAPTER III

MEASUREMENTS OF VELOCITIES AND PRESSURES

Le Boulengé Chronograph, 56. The Rheostat, 57. Disjunction, 58. Adjustments and Use, 59. Schultz Chronoscope, 60. Mettagang Recorder, 61. The Sebert Velocimeter, 62. Pressure in Guns, 63. The Tarage Table, 64. Accuracy of Gauge Pressures, 65. Direct Measurement of Pressure as a Function of Time, 66. Petavel's Time-Pressure Gauge, 67. Comparison of Measured Pressures in a Closed Chamber with those Obtained by Theory, 68.

CHAPTER IV

INTERIOR BALLISTICS

Scope, 69. Early Investigations, 70. Energy of Combustion of Nitrocellulose, 71. For Ennea-Nitrocellulose Per cent of Nitrogen 11 966, 72. Effect of Moisture and Volatiles, 73. Specific Rate of Combustion, 74. Effect of Granulation, 75. Volume Burned, when a Thickness γ is Burned, 76. Single-perforated Cylindrical Grain of Length Greater than Web, 77. Burning Surface when a Thickness γ is Burned, 78. Burning of Grains of Different Forms, 79. Considerations as to the Best Form of Grains, 80. Distribution of Energy of Powder in the Gun, 81. Energy of Translation of the Projectile, 82. Energy of Translation of the Unburnt Charge and Gases, 83. Energy Used in Overcoming Passive Resistance, 84. Total Amount of Energy Converted into Work, 85. Pressures, 86. Energy Lost to the Gun as Heat, 87. Reduced Length of Powder Chamber, 88. Energy Remaining in the Gas at any Instant, 89. Determination of Velocity as a Function of z, 90. Experimental Verification Eq. (89), 91. Differential Equation of Travel as a Function of z, 92. Determination of Travel During Time Powder is Burning, 93. Discussion of Eq. (107), 94. Determination of Travel after Powder is all Burned, 95. Special Case of Multiperforated Cylindrical Grains, 96. Le Duc's Formula, 97. Graphical Method of Integration of Eq. (97), 98. Determination of Pressure, 99. Data on Form A, 100. Calculations on Form B, 101. Example 2, 103. Design of Powder Grain for a Given Gun, 104. Design of a Gun, 105.

CHAPTER V

METALS USED IN ORDNANCE CONSTRUCTION

Elasticity, 106. Moduli of Elasticity, 107. Strength of Metals, 108. Physical Requirements, 109. Testing Machine, 110. Copper, Brass, Bronze, Aluminum, 111. Iron and Steel, 112. Uses, 113. Constituents of Iron and Steel, 114. Effect of Heat, 115. Allotropic Modifications, 116. Changes as Cooling is Continued below Solidus, 117. Cast Iron, 118. Effect of Time, 119. Microscopic Examination of Steel, 120. Hardening, 121. Tempering, 122. Other Substances in Steel, 123. Open-hearth Process, 124. The Furnace, 125. The Duplex Process, 126. Casting, 127. Whitworth's Process of Fluid Compression, 128. Processes after Casting, 129. Hollow Forgings, 130. Hardening in Oil or Water, 131.

Digitized by Google

CHAPTER VI

GUNS

Basic Principle of Gun Construction, 132. Strains Perpendicular to the Applied Stress, 133. Conditions which Limit the Maximum Powder Pressure, 134. Principal Stresses and Strains, 135. Stresses and Strains in a Closed Cylinder, 136. Relations between the Applied Stresses p and t, 137. Applied Stresses in the Cylinder in Terms of Applied Forces P_0 and P_1, 138. Discussion of Equations, 139. Distribution of Resultant Stresses in Cross-section of a Simple Cylinder, 140. Limiting Value of Interior Pressure Acting Alone, 141. Second Case. Exterior Pressures Only, 142. Limiting Value of Exterior Pressure Acting Alone, 143. Third Case. Both Interior and Exterior Pressures, 144. Limiting Interior Pressures, 145. When Resultant Tangential Stress Reaches Elastic Limit, 146. When Resultant Stress Reaches Elastic Limit, 147. Resultant Longitudinal Stress, 148. Conditions for Safety both Tangentially and Radially, 149. Compound Cylinders, 150. Gun Composed of Two Cylinders, 151. Practical Application of Formulas to Gun in Action, 152. Gun at Rest 153. Shrinkage, 154. Compression of the Bore and Expansion of the Outer Surface of the Jacket due to Shrinkage, 155. Prescribed Shrinkage, 156. Curves of Tangential Resultant Stress in Action, 157. Guns Composed of Three or More Cylinders, 158. The Gun in Action, 159. The Gun of Maximum Tangential Strength 160. Elastic Strength of Wire-wrapped Guns, 161. Construction of Guns, 162. Operations in Manufacture, 163. Boring Tools 164. Assembling, 165. Rifling the Bore, 166. Necessity of Accurate Measurements, 167. The Star Gauge, 168. Calipers, 169. Rifling: Purpose, 170. Pressure on the Lands, 171. Equation of the Developed Curve of the Rifling, 172. Form of Rifling Used in Army Guns, 173. General Characteristics, 174. The Slotted Screw Breech Mechanism, 175. Older form of Slotted Screw Breech Mechanism for Guns, 176. Welin Blocks, 177. Obturation, 178. Firing Mechanism, 179. Sliding Wedge Breech Mechanism, 180. Automatic and Semi-Automatic Breech Mechanism, 181.

CHAPTER VII

RECOIL AND RECOIL BRAKES

Stresses on the Gun Carriage, 182. Determination of the Circumstances of Free Recoil, 183. Maximum Velocity of Free Recoil, 184. Retarded Recoil, 185. Velocity of Retarded Recoil as a Function of Time and of Space, 186. Recoil Systems, 187. Counter Recoil Mechanism, 188. Hydro-pneumatic Recoil Systems, 189. Independent Recoil and Air Counter Recoil Systems, 190. Resistance of the Counter Recoil Springs or Air Cylinders, 191. Total Resistance to Recoil, 192. Relation between the Pressure, area of Orifice and Velocity of Recoil, 193. Area of Orifice, 194. Brake with Constant Pressure, 195. Profile of the Throttling Bar, 196. Variable Recoil, Modern Field Guns and Howitzers, 197. Length of Recoil in Artillery of Position, 198. Horizontal Recoil System on Seacoast Carriages, 199. Recoil Systems of the 6-inch Disappearing Carriages, models 1905 MI and 1905 MII, and of

Digitized by Google

the 14-inch Disappearing Carriage, model 1907 and 1907 MI, 200. Determination of the Length of Recoil of Guns Mounted on Wheeled Carriages, 201. Limiting Value of Total Resistance to Recoil in Wheeled Carriages, 202. Initial Strength of Counter Recoil Springs or Air Cylinders, 203. 3-inch Field Carriages Recoil System, 204.

CHAPTER VIII

ARTILLERY

Classification, 205. Method of Mounting, 206. Pedestal Mounts, 207. The Balanced Pillar Mount, 208. Barbette Carriages for Larger Guns, 209. Disappearing Carriages, 210. Elevating System, 211. Modification of the Recoil System, 212. Seacoast Mortar Carriages, 213. The 12-inch Mortar Carriage, Model 1896, 214. The 12-inch Mortar Carriage, Model 1908, 215. Recoil Cylinders, Counter Recoil Buffers and Springs, 216. Quick-loading Mechanism, 217. Breech Mechanism, 218. Turret Mounts for Seacoast Guns, 219. Calibers, 220. The Mountain Gun, 221. The 3-inch Field Gun, Model 1904, 222. The Firing Mechanism, 223. The Carriage, Model 1902, 224. The Shield, 225. The Caisson and other Wagons, 226. The 4.7-inch Heavy Field Gun, 227. The Wheels and the Trail, 228. The 6-inch Heavy Field Howitzer, 229. Traversing Mechanism, 230. Sights, 231. Recoil Controlling System, 232. Breech Mechanism, Firing Mechanism, 233. Other Howitzers, 234. Armored Mortar Cars, 235. Subcaliber Tubes, 236.

CHAPTER IX

EXTERIOR BALLISTICS

Definitions, 237. The Motion of an Oblong Projectile, 238. Determination of the Resistance of the Air, 239. The Ballistic Coefficient, 240. The Altitude Factor, 241. The Reducing Factor, 242. Trajectory in Air, Ballistic Formulas, 243. Solution of Equations, 244. Formulas for the Whole Range, 245. Computation of the Functions, 246. Secondary Function, 247. The Principle of the Rigidity of the Trajectory, 248. Table II, Artillery Circular M, 249. Determination of C from Firings, 250. Computation of C without Firings, 251. Range Table Conditions, 252. Range Corrections for Variations in C, 253. Range Corrections for Variations in δ_1/δ, 254. Range Corrections for Variations in V, 255. Range Corrections for Change in Weight of Projectile, 256. Range Correction for Tide, 257. Deflection Corrections, 258. Perforation of Armor, 259. The Danger Spaces, 260. The Danger Range, 261. Formulas for Velocities less than 825 F. s, 262. Curved and High-angle Fire, 263. Zones in Mortar Fire, 264. Range-elevation and Range-velocity Curves, 265. Conditions for 12-inch Steel Mortar, 266. Example 16, 267. Example 18, 268. Computation of Range Table without Firings, 269. Perforation of Armor, 270. Accuracy, 271. Probability of Fire, 272. Probability Curve, 273. Equation of the Probability Curve, 274. Illustration of the Use of the Table, 275. Probable Zones and Rectangles, 276. Probability of Hitting any Area, 277.

Digitized by Google

CHAPTER X

PROJECTILES

Classification, 278. Modern Projectiles, Banding, 279. Form of Projectiles, 280. Projectiles for Seacoast Guns, 281. Action of the Cap, 282. Projectiles for Field Guns, 283. The Bursting of Shrapnel, 284. The High Explosive Shrapnel, 285. Shell Tracers, 286. Grenades, 287. Volumes of Ogival Projectiles, 288. Thickness of Walls, 289. Sectional Density of Projectiles, 290. Cast-iron Projectiles, 291. Requirements in Manufacture, 292. Ballistic Test, 293. Common Steel Shell for Mobile Artillery, 294. Armor History, 295. Manufacture of Armor, 296. Classification of Armor, 297. Ballistic Test for Armor, 298. Armor Protection for Ships, 299.

CHAPTER XI

PRIMERS AND FUSES

Primers and Fuses for Cannon, 300. Service Combination Friction Electric Primer, 301. The Electric Primer for Guns Using Separate Loading Ammunition, 302. Primers for Fixed Ammunition, 303. 110-Grain Electric Primer for Fixed Ammunition, 304. Igniting Primers, 305. Fuses, 306. Ring Resistance Fuses, Point Percussion Fuse, 307. Arming Resistance of Split Ring Fuses, 308. Centrifugal Percussion Fuses, 309. Semple Centrifugal Plunger, 310. Arming Resistance of Centrifugal Fuses, 311. Combination Time and Percussion Fuses, 312. To Set the Fuse, 313. Combination Fuse, Old Pattern, 314. Combination Fuse for H. E. Shrapnel, 315. The Fuse Setter, 316.

CHAPTER XII

AIMING DEVICES

Purpose, 317. Direct-laying Sights, 318. Correction for Inclination of Trunnion Axis, 319. Independent Line of Sight, 320. Sights for Mobile Artillery, 321. Indirect Laying of Mobile Artillery Guns, the Panoramic Sight, 322. Improved Panoramic Sight, 323. Range Quadrants for Mobile Artillery Guns, 324. Aiming Seacoast Guns, 325. Telescopic Sight, Model 1898, 326. Telescopic Sight, Model 1904, 327. Telescopic Sight, Model 1912, 328. Aiming Seacoast Mortars, 329.

CHAPTER XIII

FIRE-CONTROL INSTRUMENTS

Definitions, 330. Swasey Depression Position Finder, 331. The Plotting Room, 332. The Pratt Range Board, 333. The Deflection Board for Guns, 334. Range Finders for Mobile Artillery, 335. The Self-contained Range Finder, 336. The Battery Commander's Telescope, Model 1915, 337. The Battery Commander's Ruler, 338. The Field Artillery Plotter, Model 1907, 339. The Parallax Table, 340.

Digitized by Google

CHAPTER XIV

SMALL ARMS AND HAND ARMS

Service Small Arms, 341. Requirements, 342. Life of Rifle Erosion, 343. The U. S. Magazine Rifle, Model 1903, 344. The Sights, Model 1905, 345. Deviation, Drift, 346. The Bell Cartridge, 347. The Blank Cartridge, 348. Proof of Ammunition, 349. The .45-caliber Pistol, Model 1911, 350. Operation in Firing, 351. The Magazine, 352.

CHAPTER XV

MACHINE GUNS

Classification, 353. The Gatling Gun, 354. Operation, 355. The Maxim Machine Gun, Model 1904, 356. The Breech Mechanism, 357. The Water Jacket, 358. The Automatic Machine Rifle, Model 1909, 359. Actuator, 360. Feed Arm, 361. To Cock for First Shot, 362. The Lewis Machine Gun, 363. Action, 364.

TABLES

PAGE

I. Atomic Weights 670
II. Physical Properties of Certain Gases at 0° C. and 760 mm. Pressure 671
III. Specific Heats (solids) 672
IV. Specific Heats (gases) 673
V. Heats of Formation 674
VI. Molecular Specific Heats as a Function of Temperature of Certain Gases 677
VII. Ratio of Specific Heats of Certain Gases at Ordinary Temperature 679
VIII. Ratio of Specific Heat of Certain Gases at Various Temperatures 680
IX. Characteristics of Right Prismatic Grains 682
X. Value of y' Corresponding to z for Right Prismatic Grains 683
XI. Characteristics of Cylindrical Multiperforated Grains 685
XII. Values of y' Corresponding to z for Cylindrical Multiperforated Grains 686
XIII. Characteristics and Values of y' Corresponding to z for Single Perforated Grains 689
XIV. Values of s'/s 690

Digitized by Google

ORDNANCE AND GUNNERY

CHAPTER I

PROPERTIES, MANUFACTURE, CARE AND USES OF EXPLOSIVES

Definitions and General Considerations

1. Definitions.—An explosive is a substance whose elements are capable of rapid recombination to form other substances whose combined volume is much greater than that of the original substance.

The new substances formed are known as the "products of explosion," or the "products of combustion," and that their volume may be much greater than that of the original substance it is necessary that at least one of them be a gas.

That a substance may be an explosive it is also necessary that the recombination of its elements be capable of being effected without the aid of any outside element, such as oxygen, and without the aid of exterior energy, such as heat, except the small quantity required to start the explosion.

The following considerations lead to a better understanding of the action of explosives: All chemical compounds, whether explosive or not, may be considered as being theoretically capable of being broken up or resolved into their constituent chemical elements, or radicles, by the application of a sufficient quantity of heat. The elements or radicles may then recombine to form other compounds and, in doing so, heat may be evolved. If the heat thus evolved per unit weight of the original compound is greater than the heat required to break up a unit weight of the original compound, the original compound is an explosive, pro-

Copyright, 1916, by W. H. Tschappat

Digitized by Google

viding at least one of the products of the recombination is a gas, for in this case the heat given off by the recombination of the elements of the first unit weight of explosive will be sufficient to break up the second unit weight, and so on until the entire quantity has been consumed.

In most practical explosives the heat furnished by the recombination of the elements to form the products of explosion is sufficiently great not only to continue breaking up what remains of the original substance, but also to heat the products themselves to a high temperature.

The heat given off by an explosive is the heat retained by the products of explosion plus the heat absorbed by the surrounding medium. The heat given off is the difference between the heat required to break up the explosive into its elements and the heat developed on recombination of these elements to form the products of explosion.

A great many chemical compounds or mixtures of chemical compounds are explosives, but practically only the class of explosives containing oxygen and some oxidizable elements, like hydrogen or carbon, is in use to any extent. Oxygen generally enters the explosive in combination with nitrogen as in the radicles NO, NO_2, etc., and on explosion it separates from the nitrogen and combines with carbon, hydrogen, or other oxidizable elements contained in the explosive.

As to their constitution, explosives may be divided into three classes:

(*a*) Those consisting of a definite chemical compound which is itself an explosive. Examples are: Nitroglycerine, nitrocellulose, picric acid and ammonium nitrate.

(*b*) Those consisting of mixtures of several elements or compounds none of which is itself an explosive. On explosion one of the constituents, which are intimately mixed, supplies the oxygen and the others supply the oxidizable elements. The most common explosive of this class is black powder.

(*c*) Those consisting of two or more chemical compounds,

Digitized by Google

themselves explosives, or one or more explosive chemical compounds and one or more non-explosive elements or compounds.

Nitroglycerine smokeless powder which contains nitroglycerine, nitrocellulose and vaseline, is an example.

2. Effects of Explosion.—The effects produced by an explosion are dependent upon the heat given off; upon the quantity of gas evolved; and upon the rapidity of reaction.

In comparing explosives the first two of these quantities are measured per unit weight of the explosive, and the last is the linear rate at which the explosion travels through the explosive and is measured in inches or feet per second.

Heat Given Off. Work. Potential.—The heat given off by an explosive is the difference between the heat evolved by the recombination of the elements and that required to break up the original compound, or compounds, forming the explosive.

The work which a unit weight of explosive is capable of doing depends principally upon the heat given off. Berthelot has determined the heats of formation from the elements of most explosive substances, as well as those of the usual products of combustion.

Now the heat of formation from its elements of a substance is the heat given off when the substance is formed from its elements and is exactly equal to the heat required to break up the substance into its elements. Knowing the heat of formation of an explosive and that of the products of explosion, it is easy to calculate the heat given off and available for work.

When the heat given off per unit weight of explosive is expressed in units of work it is known as the potential of the explosion. In practice the entire amount of heat given off by a unit weight of explosive cannot be utilized as work. The losses of energy as heat are so great that, in the most favorable circumstances, not more than 40% of the potential can be utilized as work.

Quantity of Gas Evolved.—The volume of gas evolved at the temperature of explosion determines the pressure developed by the explosion in any closed chamber.

Rapidity of Reaction.—This is an important consideration in

Digitized by Google

comparing explosives. Explosives differ greatly in the rapidity at which the explosion travels.

In the first class, known as *low* or *progressive explosives*, the explosion progresses from the initial point by the heating of successive layers of the explosive to the explosion temperature. These explosives therefore burn on the outside or exposed surface only. In these explosives the rapidity of reaction is not great under ordinary conditions, but increases greatly if the explosion takes place under a high pressure. Pressure seems to hold the heated products against the burning explosive and causes successive layers to reach the explosion temperature more rapidly. Different low explosives differ considerably in their rapidity of reaction or, as usually expressed, their rate of burning.

In the second class, known as *high explosives*, the explosion travels from the initial point in a wave of vibration known as the explosive wave. The successive layers are not raised to the temperature of explosion by the heat derived fron the preceding ones, but the energy required to break up the successive layers is furnished first by the initial impulse produced by a primer or other means, and then by the explosive wave. The explosive wave consists of molecules of the products of combustion of the part of the explosive last exploded. The impact of these rapidly moving molecules on the adjacent parts of the explosive causes it to explode and furnish in turn new rapidly moving molecules of the explosive wave. The speed of the explosive wave, or rate of detonation, varies considerably in different high explosives.

3. **Examples of Two Classes of Explosives.**—Examples of low or progressive explosives are black gunpowder and smokeless powder.

The explosion of these differs from the burning of a piece of wood only in that the oxygen is furnished in the one case from the surrounding air, and in the other from the material of the explosive itself.

The rapidity of reaction, or rate of combustion, of these explosives is a perfectly definite quantity for an explosive of a

Digitized by Google

given composition, providing the explosion is taking place under a given pressure. The rate of combustion increases rapidly with the pressure under which the explosion is taking place. When burning in air the rate of combustion of smokeless powder is about .05 in. per second, while when burning in its gas at a pressure of 3000 lbs. per square inch its rate of combustion is estimated to be 0.5 in. per second.

Examples of high explosives are nitroglycerine, guncotton, picric acid, trinitrotoluol, etc. These explosives explode with extreme rapidity. The velocity of propagation of the explosive wave through a mass of guncotton has been determined experimentally, by Sébert, to be from 16,500 to 20,000 ft. per second.

Effects of Low or Progressive Explosives and of High Explosives.—Low or progressive explosives are those that consume an appreciable amount of time in explosion. They produce explosions of the second order. The explosion is comparatively slow and produces a pushing effect. This class of explosives is used as propelling charges in guns and sometimes for blasting. High explosives are those of great rapidity of reaction. They produce explosions of the first order also known as detonations. By reason of their quickness of reaction, they produce a shattering or crushing effect. This class of explosives is used for blasting; for bursting charges for projectiles; for mines; for demolition purposes, etc.

4. Conditions that Influence Explosion.—While the above is the general classification of explosives as regards their rapidity of reaction, there are cases where the same explosive may act either as low or high explosive depending upon the conditions under which it is exploded. The character of the explosion is influenced by the physical condition of the explosive; by the external conditions and by the nature of the exciting cause.

Physical Conditions.—The influence of physical conditions is seen in the slowness or quickness of smokeless powder when the granulation is, respectively, large or small and also in the insensitiveness to explosion of nitroglycerine when frozen.

External Conditions.—External conditions influence explosion

Digitized by Google

chiefly by the amount of confinement they impose. Explosives whose rapidity of reaction is very great are not affected by the degree of confinement to the same extent as the low order of explosives. Thus, dynamite exploded in contact with blocks of iron in the open air may break them. Its rapidity of reaction is so great that the surrounding air and the products of combustion cannot escape with sufficient rapidity to prevent the development of a high pressure. Smokeless powder, on the other hand, requires strong confinement if it is desired to develop the full pressure it can produce. Black powder also, to a less extent, requires strong confinement.

Exciting Cause.—All explosives are exploded by the addition of sufficient energy to some particle to cause that particle to break up into its constituent elements or radicles. In the case of low explosives each have a more or less well defined " temperature of ignition " above which they explode. In the case of high explosives the necessary energy to start explosion may be applied as heat, or as the kinetic energy of a moving body striking the explosive, or as a combination of both. In these explosives the nature of the exciting cause frequently causes different orders of explosion in the same explosive. Thus, dry guncotton when ignited by a flame may burn quietly, while when detonated by an explosive cap the explosion is of the first order.

High explosives differ greatly in their insensitiveness to ignition. Some, like nitroglycerine, are readily exploded by an ordinary commercial exploder, while others, like wet guncotton, require the addition of an auxiliary charge of a more sensitive explosive.

5. Primers, Fuses and Detonating Caps.—Explosives may be exploded by three methods. By the application of heat directly, or through a wire heated by electricity, as in the electric primer and detonating cap; by the application of heat through friction, as in the friction primer; by percussion, or the application of energy through a blow. As it is not convenient to apply any of these methods to the main charge of explosive directly, small charges of special explosives are made up in the form of primers, fuses

Digitized by Google

or detonating caps. These are exploded by one of the above methods and communicate the explosion to the main charge.

Many of the best high explosives are not readily detonated by the direct application of heat, but require shock or impact to secure explosions of the first order. The primers or caps for these explosives must therefore consist largely of some high explosive which produces a very violent explosion. Fulminate of mercury is one of the high explosives readily detonated by any of the above methods and its detonation is very violent. For these reasons it enters into the composition of many primers and fuses and all detonating caps.

For the explosion of charges of low explosives, as the propelling charge in guns, primers containing as their igniting element a composition whose explosive ingredient is chlorate of potash are now used in our service. These primers are safer than those containing fulminate of mercury and may be made either of the friction or the percussion type. Primers for cannon always contain an additional charge of black powder to increase the flame.

In propelling charges for cannon a very large amount of flame is necessary to thoroughly ignite the smokeless powder. In addition to the primer there are therefore used with these charges "igniting charges" of black powder attached to the cartridge bags containing the charge of smokeless powder. Detailed description of primers, fuses, etc., will be given in the chapter devoted to that purpose.

6. Uses of the Two Classes of Explosives.—The chief use of low or progressive explosives is as propelling charges in guns, and for blasting where it is desired, for instance, to move a large quantity of earth, rather than to break rock or other material. In other words, these explosives are used when it is desired to exert a pushing effect rather than a blow. High explosives are used when it is desired to exert a high pressure so as to shatter the container, whether that be the walls of a shell, or a mine, or the surrounding rock in blasting. This class of explosives is not satisfactory for use as propelling charges for the reason that the rapidity of reac-

Digitized by Google

tion is so great that a pressure sufficient to burst the gun is developed before the projectile can start moving. On the other hand, low explosives are not satisfactory as shell fillers for the reason that the rapidity of reaction is so low that the rupture of the shell at the weakest point takes place before all the explosive has exploded. The remaining explosive is thus wasted and the projective is broken into a few pieces only.

With a high explosive charge all or nearly all the charge is exploded before the projectile has time to rupture. The greater the rapidity of reaction of the high explosive charge, the smaller the pieces into which the projectile will be broken. These pieces should not be so small as to make them ineffective against gun carriages or other mechanisms against which the projectiles are used. There is, therefore, a limit to the rapidity of reaction desirable in an explosive intended to be used as a shell filler.

7. General Requirements of Explosives for Use as Propelling Charges in Guns.—The following have been determined by experience to be the principal characteristics required of explosives in order that they may be satisfactory for use as propelling charges in guns. Explosives used as propelling charges are known as powders.

Safety and Insensitiveness.—The powder should be reasonably safe in manufacture and free from very injurious effect upon the operatives. It should be comparatively free from danger of ignition by bullets fired into it. It should be incapable of being detonated by the strongest detonator, i.e., it should always act as a low, rather than as a high, explosive. It should produce as little erosion of the bore as possible. Grains of the powder should be tough and not easily broken, rather than brittle. The products of combustion should not be poisonous to an objectionable degree.

Ballistic Requirements.—The powder must, with proper granulation, be capable of giving at least the adopted muzzle velocities in all the service guns within the maximum pressures prescribed for them. The powder must not unduly heat the guns. The powder must be practically smokeless and must not unduly foul

Digitized by Google

the bore. It must not require an unduly strong primer for ignition. The products of combustion must have no chemical action on metals.

Stability.—The powder must not explode in less than five hours in sealed tubes at 135° C. The powder must not give off red fumes or explode in less than sixty days when kept at a temperature of 65.5° C.

In long-continued storage at the ordinary temperature and at 50° C., the powder must show no marked loss in stability as measured by the preceding tests. The powder must show no marked change in any of its characteristics between temperatures of −15° C and +50° C. The powder must be practically non-hygroscopic.

General Requirements.—It should be possible to secure all the raw material for the powder in this country at a reasonable cost. When granulated for small arms, the powder should be capable of being machine loaded into cartridges.

Nitrocellulose Powder.—Up to the present time, nitrocellulose powder has complied better with the above requirements than any other that has been proposed, and it is therefore used universally in our service for propelling charges in guns. Nitroglycerine powder, formerly used in our service, was given up for the reason, principally, that it caused too great erosion of the bores of guns. The danger of manufacture is also greater than that of nitrocellulose powder.

8. Requirements of High Explosives for Projectiles.—The following requirements of explosives to be used as filling charges for projectiles have been found necessary by experience and tests.

Safety and Insensitiveness.—The explosive should be reasonably safe in manufacture and free from very injurious effects upon the operatives. It must not explode by the shock of discharge from the gun when loaded in the shell for which it is intended. It must withstand the shock of impact when fired in unfused shells against the strongest armor plate that the shells alone will penetrate without breaking up.

Detonation and Strength.—The explosive must be capable of

Digitized by Google

being completely detonated by the service detonating fuse and should have the greatest strength compatible with other requirements.

Stability.—The explosive must not decompose when a dry or wet sample is hermetically sealed and subjected to a temperature 65.5° C. for one week; must be reasonably non-hygroscopic; must not attack ordinary metals to an extent not easily prevented; must not deteriorate or undergo chemical change in storage.

General Conditions.—Loading into projectiles must not be attended with unusual danger or difficulty. It should be possible to secure a supply of the explosive quickly and at a reasonable cost.

Explosive D, trinitrotoluol and picric acid are among the explosives which comply well with these requirements. Explosive D, on account of its great insensitiveness, can be carried through the thickest armor without explosion by impact. For this reason it has been adopted for armor-piercing projectiles where it is desired to get the explosion by action of the fuse after penetration of the armor. This explosive is also used in field gun and howitzer shell.

Trinitrotoluol is used as bursting charge for submarine mines and for demolition purposes. It is easier to detonate than Explosive D.

9. The principal explosives used in our service are as follows:

Purpose	Kind of Explosive, Low or High	Name
Propelling charges in guns.....	Low.	Nitrocellulose Smokeless Powder.
Bursting charges for projectiles.....	High.	Picric acid, Explosive D, Trinitrotoluol.
Blank or saluting charges for cannon.	Low.	Black Powder, Smokeless Powder.
Reenforce charges in primers.....	Low.	Black Powder.
Base charge in shrapnel.....	Low.	Black Powder.
Time trains for fuses.....	Low.	Black Powder.
Igniting charges for cannon.....	Low.	Black Powder.
Charges for submarine mines.....	High.	Trinitrotoluol or Wet Guncotton.
Demolition purposes.....	High.	Trinitrotoluol, Dynamite.
Igniting elements of primers and fuses.....	High.	Fulminate of Mercury, Chlorate of Potash.

Digitized by Google

10. Historical Sketch of Development of Gunpowder.—The Chinese are said to have employed an explosive mixture, very similar to gunpowder, in rockets and other pyrotechny as early as the seventh century.

The earliest record of the use in actual war of the mixture of charcoal, niter, and sulphur called gunpowder, dates back to the fourteenth century. Its use in war became general at the beginning of the sixteenth century. Until the end of the sixteenth century it was used in the form of fine powder or dust. To overcome the difficulty experienced in loading small arms from the muzzle with powder in this form, the powder was at the end of the sixteenth century given a granular form. With the same end in view attempts at breech-loading were made; but without success, as no effective gas check, which would prevent the escape of the powder gases to the rear, was devised.

No marked improvement was made in gunpowder until 1860, when General Rodman, of the Ordnance Department, U. S. Army, discovered the principle of progressive combustion of powder, and that the rate of combustion, and consequently the pressure exerted in the gun, could be controlled by compressing the fine-grained powder previously used into larger grains of greater density. The rate or velocity of combustion was found to diminish as the density of the powder increased. The increase in size of grain diminished the surface inflamed, and the increased density diminished the rate of combustion, so that, in the new form, the powder evolved less gas in the first instants of combustion, and the evolution of gas continued as the projectile moved through the bore. By these means higher muzzle velocities were attained with lower maximum pressures. To obtain a progressively increasing surface of combustion General Rodman proposed the perforated grain, and the prismatic form as the most convenient for building into charges. As a result of his investigations powder was thereafter made in grains of size suitable to the gun for which intended, small-grained powder for guns of small caliber, and large-grained powder for the larger guns. The powders of regu-

Digitized by Google

lar granulation, such as the cubical, hexagonal, and sphero-hexagonal, came into use, and finally for larger guns the prismatic powder in the form of perforated hexagonal prisms. Some forms of granulation for black and brown powders are shown in Fig. 1.

A further control of the velocity of combustion of powder was obtained in 1880 by the substitution of an underburnt charcoal for the black charcoal previously used. The resulting powder called *brown* or *cocoa* powder from its appearance, burned more

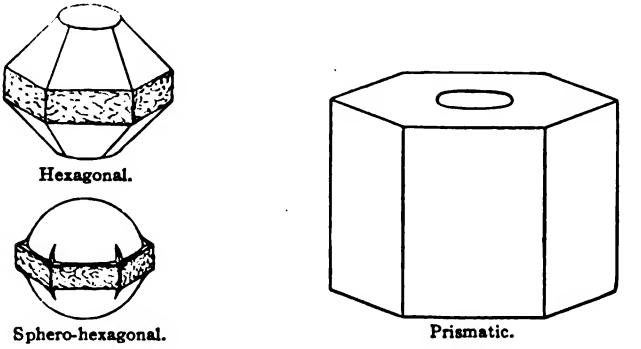

FIG. 1.—Forms of Granulation of Black and Brown Powder.

slowly than the black powder, and wholly replaced that powder in the larger guns.

A still further advance in the improvement of powder was brought about in 1886 by the introduction of smokeless powders. These powders are chemical compounds, and not mechanical mixtures like the charcoal powders; they burn more slowly than the charcoal powders, and produce practically no smoke. Smokeless powders have now almost wholly replaced black and brown powders for charges in guns. Black powder is used in fuses, primers and igniters and in saluting charges.

11. **Charcoal Powders.**—*Composition.*—Black gunpowder is a mechanical mixture of niter, charcoal, and sulphur, in the proportions of 75 parts niter 15 charcoal, and 10 sulphur.

The niter furnishes the oxygen to burn the charcoal and sul-

Digitized by Google

phur. The charcoal furnishes the carbon, and the sulphur gives density to the grain and lowers its point of ignition.

The distinguishing characteristic of charcoal is its color, being brown when prepared at a temperature up to 280°, from this to 340° red, and beyond 340° black.

Brown powder contains a larger percentage of niter than black powder, and a smaller percentage of sulphur. A small percentage of some carbohydrate, such as sugar, is also added. Its color is due to the underburnt charcoal.

Manufacture.—The ingredients, purified and finely pulverized, are intimately mixed in a wheel mill under heavy iron rollers. The mixture is next subjected to high pressure in a hydraulic press. The cake from the press is broken up into grains by rollers, and the grains are rumbled in wooden barrels to glaze and give uniform density to their surfaces. The powder is then dried in a current of warm, dry air, and the dust removed. The powder is thoroughly blended to overcome as far as possible irregularities in manufacture.

For powders of regular granulation the mixture from the wheel mill is broken up and pressed between die plates constructed to give the desired shape to the grains. Prismatic powder was made by reducing the mill cake to powder and pressing it into the required form.

12. Smokeless Powders.—There are two general classes of smokeless powders, nitrocellulose and nitroglycerine powders. They are both made from guncotton to which is added for the nitroglycerine powder a variable proportion of nitroglycerine.

Comparison of Nitroglycerine and Nitrocellulose Powders.—The temperature of explosion of nitroglycerine powder is higher than that of nitrocellulose powder and it increases with the percentage of nitroglycerine contained in the powder. As the erosion of the metal of the bore is found to increase with the temperature of the powder gases, greater erosion follows the use of nitroglycerine powder. The endurance or life of a gun is dependent on the condition of the bore and on this account nitrocellulose powder possesses

Digitized by Google

a great advantage over nitroglycerine powder. Owing to the fact that the erosion in a gun increases with the caliber nitroglycerine powders are less objectionable in small arms than in cannon and until 1906 such powders were used in the U. S. service small arms, but even there it was found so objectionable that its use was abandoned and a nitrocellulose small arms powder of the same composition as the cannon powder was adopted in its place.

To produce a given velocity a larger charge of nitrocellulose than of nitroglycerine powder is required. This necessitates for nitrocellulose powder a larger powder chamber which increases the weight of metal in the gun. The advantage of nitroglycerine powder in this respect has caused its retention in the British service and as a charge for some sporting rifles and shot guns in this country, but its final abandonment for all arms in the U. S. service has been forced by the necessity for using a smokeless powder producing as little erosion as possible.

The Manufacture of Nitrocellulose Smokeless Powder

13. Formation and Classification of Nitrocelluloses.—Nitrocellulose smokeless powder being the principal kind of gunpowder used in our service, a brief description of its manufacture will be given.

Nitrocellulose is formed by the action of nitric acid on cellulose. In our service the form of cellulose used is cotton, the chemical formula for which is $C_{24}H_{40}O_{20}$, or some multiple of that formula.

Nitrocellulose is a nitro-substitution compound formed by the substitution of NO_2 radicles for the hydrogen of cellulose.

By varying the process of nitration, to be described, a varying number of NO_2 radicles may be introduced into the cellulose molecule, thus giving various percentages of nitrogen in the nitrocellulose.

Vielle's classification of the various nitrocelluloses is as follows:

Digitized by Google

VIELLE'S CLASSIFICATION OF NITROCELLULOSES.

Formula.	Designation.	C.c. of NO_2.	Per Cent of N.	Remarks.
$C_{24}H_{36}O_{20}(NO_2)_4$	Tetra-n.c.	108	6.76	
$C_{24}H_{35}O_{20}(NO_2)_5$	Penta-	128	8.02	
$C_{24}H_{34}O_{20}(NO_2)_6$	Hexa-	146	9.15	Only slightly attacked by acetic ether and ether-alcohol. } Friable cottons.
$C_{24}H_{33}O_{20}(NO_2)_7$	Hepta-	162	10.18	Becomes gelatinous in acetic ether and ether-alcohol. } Friable cottons.
$C_{24}H_{32}O_{20}(NO_2)_8$	Octo-	178	11.11	Soluble in ether-alcohol. Inferior colloid.
$C_{24}H_{31}O_{20}(NO_2)_9$	Ennea-	190	11.96	} Highly soluble in ether-alcohol. Superior colloid.
$C_{24}H_{30}O_{20}(NO_2)_{10}$	Deca-	203	12.75	
$C_{24}H_{29}O_{20}(NO_2)_{11}$	Endeca-	214	13.47	Insoluble in ether-alcohol. Soluble in acetone. Guncotton.

The nitrocellulose used in our service contains 12.60% nitrogen and is soluble in a mixture of 36% alcohol and 64% ether. Nitrocellulose not soluble in this solvent, known as insoluble nitrocellulose, is sometimes also used in the manufacture of smokeless powder, generally in connection with a suitable percentage of soluble nitrocellulose.

In the manufacture of nitrocellulose smokeless powder there are two distinct processes:

1. The manufacture of nitrocellulose.
2. The manufacture of smokeless powder from nitrocellulose.

14. Raw Materials.—*Cotton.*—The cotton used is generally the short fiber cotton known as "linters," that grows next to the cotton seed and is not suitable for use in fabrics. This form of cotton is cheaper than long fiber cotton and has other advantages for use in the manufacture of nitrocellulose. There is somewhat more wastage of this short fiber cotton during the manufacture, and the production of nitrocellulose per pound of raw cotton as compared with that of long fiber cotton is somewhat less. For this reason long fiber cotton is also sometimes used.

Digitized by Google

The cotton is purchased under specifications which require it to have been bleached and purified so as to remove oil and other extractive and foreign matter and all but traces of lime, chlorides and sulphates. It is required to be of uniform character and free from lumps that would interfere with nitration.

Acids.—The acid used in nitrating is a mixture of the following composition:

HNO_3	21% to 26%
H_2SO_4	64% to 60%
H_2O	15% to 14%

The acid weaker in nitric is used with the displacement process and that stronger in nitric with the centrifugal process, to be described later.

The acids purchased as raw material are much stronger than the above since they are intended to build up the spent acid resulting from the nitration process to the strength of the nitrating acid whose composition is given above. The two acids purchased are:

Fortifying acid whose strongest composition is

HNO_3	52%
H_2SO_4	47%
H_2O	3%

This is the highest percentage of nitric safe to transport in iron tank cars. This acid is intended to supply the deficiency of nitric to the spent acid.

Sulphuric acid whose composition is:

H_2SO_4	98%
H_2O	2%

This is the strongest commercial form of sulphuric and is intended to supply the deficiency of sulphuric in the spent acid.

Acids must contain no metallic salts, other than salts of iron, and must contain not more than a trace of chlorine compounds.

Alcohol.—Ethyl alcohol is used in the dehydration process to be described later and also as an ingredient of the ether-alcohol

Digitized by Google

solvent used in making a colloid of the nitrocellulose. The alcohol used is 92.3% absolute, by weight, and is practically free from acid and aldehyde.

Ether.—This is the other ingredient of the solvent. Practically pure ethyl ether containing only small quantities of water and alcohol is required.

15. Preparation of Cotton.—The cotton normally contains 5% or 6% of moisture which it has absorbed from the atmosphere. In the process of nitration this amount of moisture placed in the nitrating acid would result in heating which might cause the partially nitrated cotton to catch fire.

The cotton is received tightly packed in bales tied with cords. Packing causes the cotton to stick together in bunches after the bales are pulled apart. These bunches would interfere with nitration by preventing the acid from reaching all the fibers.

First Process.—The first process consists in feeding the cotton to a machine known as a " cotton picker " which pulls apart the bunches and separates the fibers, placing the cotton in an open, fluffy condition easily penetrated by the acid.

Second Process.—The picked cotton is now placed in one of a series of bins with wire-mesh floors. Arrangements are provided for blowing heated air through the mesh floors and through the cotton so as to thoroughly dry it. The temperature of the bins may be as high as 100° C. and after 24 hours the cotton is dried to a moisture content of less than 1%. The cotton is then carefully weighed out in 15- or 20-lb. charges and placed in cans which are tightly closed to prevent the absorption of moisture. Each can forms a charge for one of the nitrating machines.

Preparation of Acid.—As previously stated fortifying acid and sulphuric acid are obtained from the acid factory and used to build up, or strengthen, the spent acid resulting from the nitrating process. These acids are kept in separate iron tanks. To obtain by their mixture a proper strength of nitrating acid a mixing tank is provided. This consists of a cylindrical iron tank mounted on a scale and provided with a paddle for stirring the acids. (See Fig. 2.)

Digitized by Google

From the chemical composition of the acids previously determined the amount of each required to produce a nitrating acid of the required composition is calculated.

Spent acid, of which the largest amount is required, is then run into the tank and the motor which propels the paddle is started.

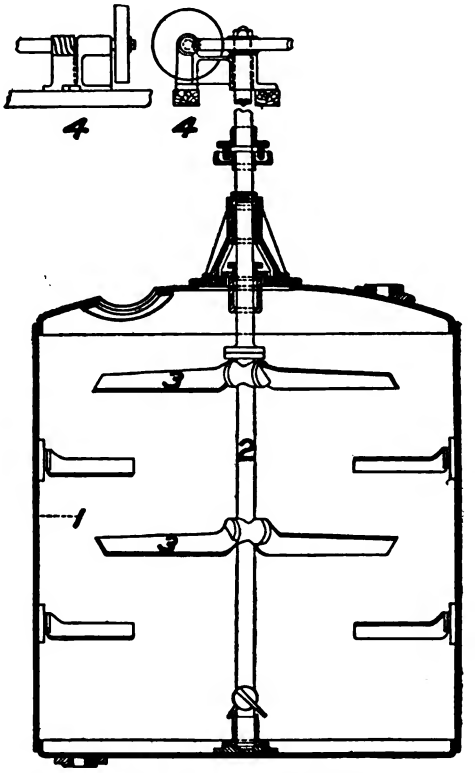

FIG. 2.—Acid Mixing Tank.
1, iron tank. 2, paddle shaft. 3, paddles. 4, worm drive.

The required weights of fortifying acid and sulphuric acid are then successively run into the tank through pipes, weights being checked by the scale. During all this time, and for some time after all the acids are in, the paddle is kept running. Stirring is necessary to prevent undue heating and possible fuming off of the nitric acid.

Digitized by Google

When the acid is thoroughly mixed and has cooled it is drawn off into another tank and is ready for use in nitrating.

16. Nitrating Processes.—Two methods of nitration are used. The first, known as the Thomson displacement process, is used to some extent in England and is used exclusively at the Army powder factory at Picatinny Arsenal. The second, known as the centrifugal process, is used generally at powder factories.

The Displacement Process.—In this process the cotton is nitrated in earthenware pans, one of which is illustrated in Fig. 3. Four

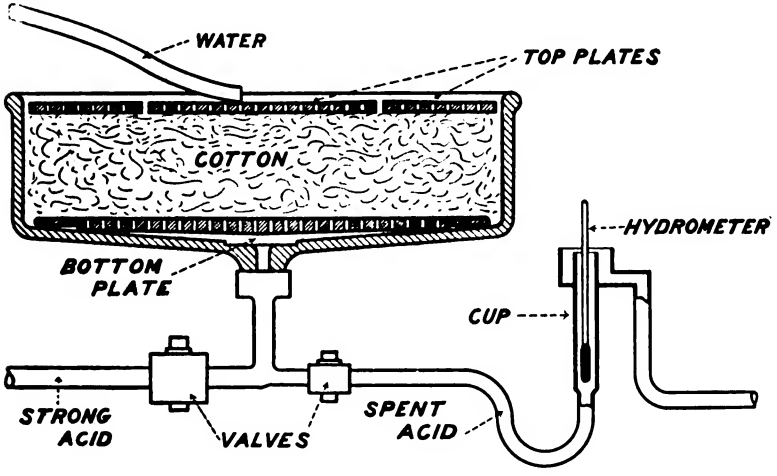

FIG. 3.—Nitrating Pan.

of these pans are connected together so as to form a single nitrating unit. Each unit is piped so that it may be filled with nitrating acid through pipes entering at the bottom. Spent acid is drawn off through the same pipes and then diverted to other pipes connected with the spent acid tanks.

The pans of a unit are first filled with nitrating acid which has been previously heated to 25° or 30° C.

Each unit of four pans is covered with a wooden hood provided with doors for feeding and dipping the cotton. The proper charge of cotton is then placed in each pan being immediately submerged

Digitized by Google

or dipped in the acid by means of a fork. Dipping is necessary to prevent excessive fuming and heating. During this process of dipping fumes developed under the hood are removed by an exhaust fan or steam jet causing draught through earthenware pipes leading from the hood out of the building.

When the entire charge for one unit has been dipped water is run on top of each pan to a depth of about half an inch. Since it is lighter than the acid it remains on top, seals the pan, and prevents fuming. The wooden hood is then removed to another unit.

The charge of cotton is allowed to remain in the acid for one hour, at the end of which time the nitration is complete.

A valve at the bottom of the pan is then opened and the acid is allowed to run out into the spent acid tank. At the same time water is allowed to run on top of the pan at such a rate as to keep it filled with liquid. There is found to be not much mixture between the water and the acid. As the acid runs out it passes through a vessel containing a hydrometer which gives its specific gravity. When this passes a certain lower limit the liquid is allowed to run into a sewer. For some time after, this water is allowed to run through the cotton in the pan, thus removing as much acid as possible.

The Centrifugal Process.—In this process the nitrating is done in a special centrifugal machine such as is shown in Fig. 4. Stronger acids are used than in the previous process and the nitration is completed in fifteen or twenty minutes. The acid is then separated from the cotton by starting the machine. In a few minutes all except a small part of the acid has been removed from the cotton. To prevent the cotton from catching fire when exposed to the air it is " drowned " in water as soon as possible after the machine is stopped.

17. **Boiling Processes.**—*First Boiling.*—The nitrated cotton, or nitrocellulose, is now placed in large wooden tubs with perforated false bottoms as shown in Fig. 5. It is washed with several changes of cold and hot water, the water being heated by introducing

Digitized by Google

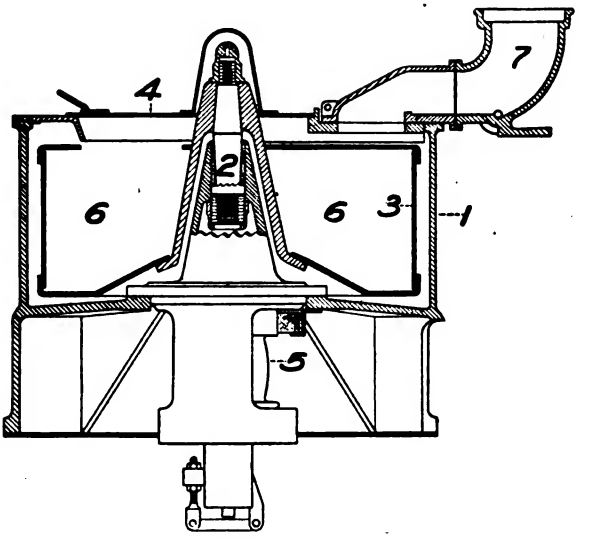

FIG. 4.—Nitrating Centrifugal.

1, body. 2, vertical revolving shaft. 3, perforated basket for holding cotton. 4, lid of basket. 5, drive pulley. 6, space for cotton. 7, fume pipe.

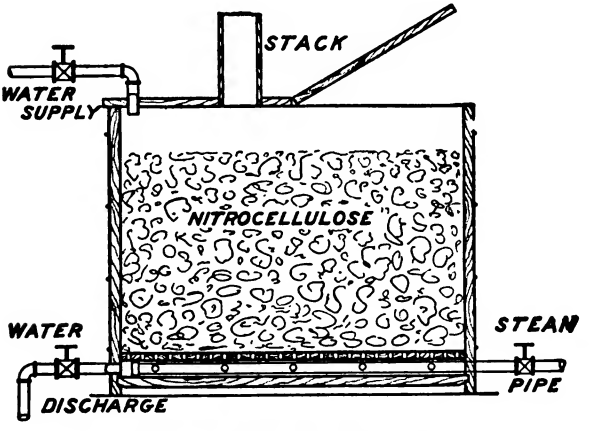

FIG. 5.—Preliminary Boiling Tub.

Digitized by Google

steam under the false bottom so that it may not come into direct contact with the nitrocellulose.

Washing removes practically all acidity from the outside of the nitrocellulose fibers, but acidity may still remain in the hollow interior of the fibers.

Pulping Process.—The nitrocellulose is now placed in a pulping or beating machine, similar to those used in pulping wood fiber in the paper industry. (See Fig. 6.) Mixed with water it is run through this machine until the fibers have been thoroughly broken up and the dried pulp has a mealy appearance. This operation releases whatever acidity may have remained inside the fibers and further washing to entirely remove the acidity is necessary.

Second Boiling.—In this process wooden tubs known as "poaching tubs," provided with paddles to stir the mixture of pulped nitrocellulose and water, are used. The nitrocellulose is washed in several changes of hot and finally in several changes of cold water, the paddles being kept running so as to prevent caking. (See Fig. 7.)

Wringing Out of the Water.—The wet nitrocellulose from the poaching tubs is now passed through centrifugal wringers so as to remove excess of water. A type of wringer used for this purpose is shown in Figs. 8 and 9. After passing through the wringers the nitrocellulose contains about 30% water. In this condition it is packed in boxes and stored for use in the manufacture of powder. At this stage the manufacture of the nitrocellulose is complete and the manufacture of powder begins. At each of the preceding stages chemical or other tests are made to determine whether the nitrocellulose complies with the required condition.

18. Principle Underlying the Manufacture of Smokeless Powder from Nitrocellulose.—The nitrocellulose of smokeless powders is chemically identical except in per cent of nitrogen with the gun-cotton used as a high explosive and the nitroglycerine of nitroglycerine powders differs not at all chemically from the nitroglycerine used as a high explosive in its liquid form or absorbed in Kieselguhr to form dynamite. It is well known that any

Digitized by Google

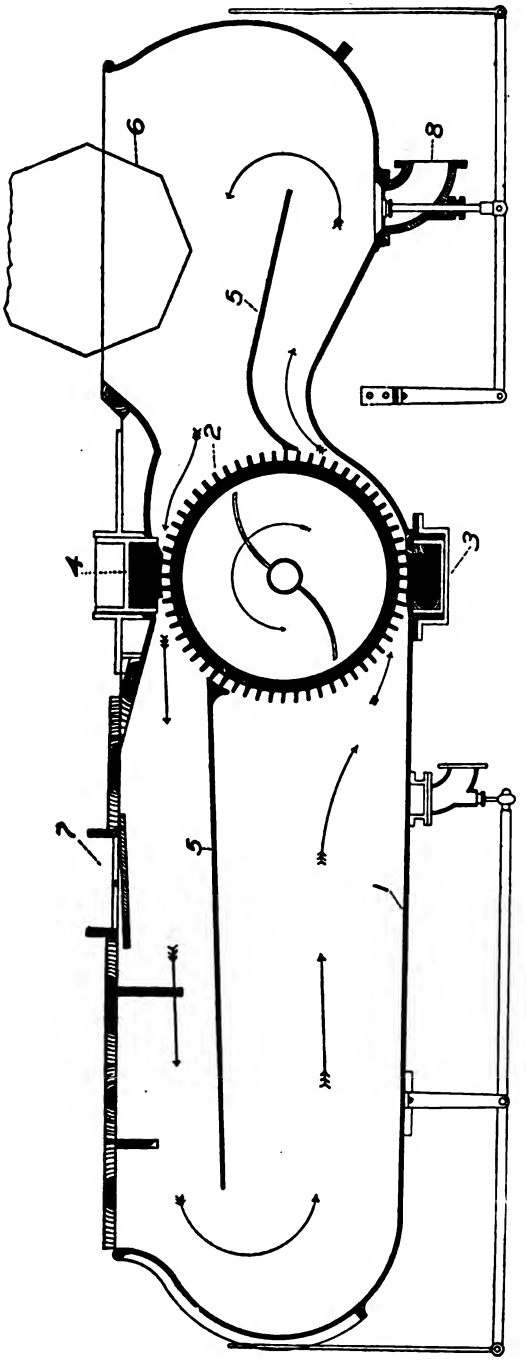

FIG. 6.—Pulping Machine.

1, body, of wood or iron. 2, cutting cylinder. 3, bottom cutting bed. 4, top cutting bed. 5, baffles to control flow of cotton and water. 6, hexagonal frame covered with silk cloth for removing water from charge. 7, opening for charging machine. 8, discharge pipe with valve.

Digitized by Google

attempt to fire guncotton, nitroglycerine, or dynamite in a gun would result in a disastrous explosion and it may not at first be apparent why these materials in the form of smokeless powder are so useful and reliable propellants for projectiles. The reason is to be found in the different physical condition of the substances.

Guncotton in the form used for high explosives, even though it may be compressed by hydraulic pressure into blocks, is relatively

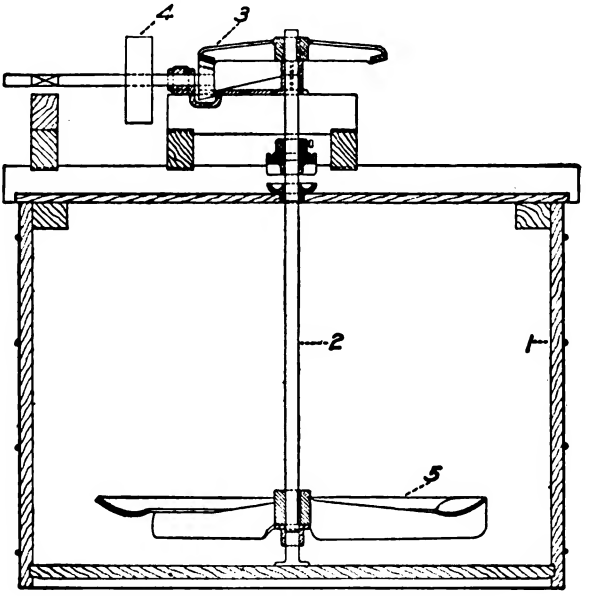

FIG. 7.—Final Boiling or Poaching Tub.

1, body of tub, wood. 2, paddle shaft. 3, drive gear. 4 drive pulley. 5, paddle for stirring pulped nitrocellulose and water.

porous, so that when a small portion is exploded the explosive wave not only travels throughout the rest of the mass of the guncotton instead of over its surface only, but travels so rapidly that the conversion of the whole into gas is almost instantaneous; and the same may be said of nitroglycerine in its ordinary form. In the form of smokeless powder, however, these substances are so dense and tough that the explosive wave cannot travel throughout the

Digitized by Google

mass but must, even under the confinement and high pressure existing in the gun, travel over the surface only, and this also at a relatively low velocity. The result is that smokeless powder burns progressively and relatively slowly, and the rate of combustion of the charge may be controlled by varying the shape and size of the powder grains in such manner as to control not only the initial

FIG. 8.—Tolhurst Centrifugal Wringer.

surfaces exposed to ignition but the manner in which this surface changes as the charge is gradually converted into gas.

The change in the physical condition of the guncotton alone or the mixture of guncotton and nitroglycerine to the dense and tough form required for smokeless powder is readily accomplished by dissolving the substances in a suitable solvent and then remov-

Digitized by Google

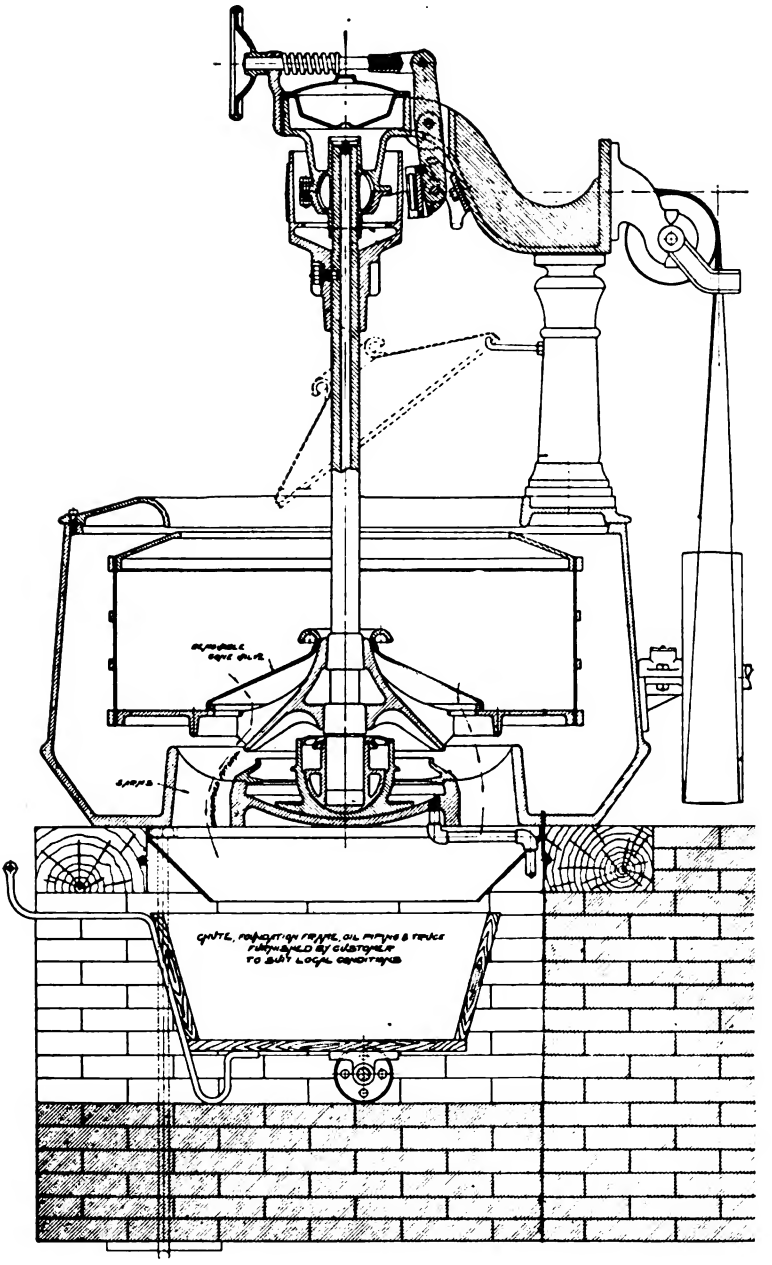

FIG. 9.—Tolhurst Centrifugal Wringer.
Sectional view showing method of discharging the material from the bottom.

Digitized by Google

ing all or nearly all of the solvent by drying the product. This process, which is the basis of the manufacture of smokeless powder, is called colloiding, and the dense, tough, and horn-like product obtained is called the colloid.

19. Dehydrating, Mixing, Blocking and Graining.—*Dehydration.*—Smokeless powder is a colloid formed by dissolving nitrocellulose in a mixture of ether and alcohol and subsequently drying out the solvent. Nitrocellulose will not dissolve in the ether-alcohol solvent unless it is dry, so the first process is to dehydrate the nitrocellulose. This is now universally done by slightly compressing a charge of wet nitrocellulose in a press known as a dehydrating press and then forcing alcohol under pressure through it. The alcohol drives all the water out ahead of it and at the end of the operation the nitrocellulose contains alcohol but no water. (See Fig. 10.)

A weight of solvent varying from 80% to 105% of the dry weight of the nitrocellulose is necessary to make a good colloid. The composition of the solvent is 64% ether and 36% alcohol. On this basis the amount of alcohol required to be left in the charge of the dehydrating press is calculated and all in excess is pressed out. What remains will be just sufficient, when the proper amount of ether is added, to make the required weight of solvent. The alcohol, and mixture of alcohol and water, from the dehydrating press is saved and rectified for further use.

Mixing.—This operation is carried on in mixing machines similar to those used in bread making. The blocks of nitrocellulose containing alcohol, as they are received from the dehydrating press, are broken up by hand and placed in the machine. The machine is then run for a short time so as to break up the lumps, after which the required amount of ether is added. Running of the machine is then continued until a satisfactory colloid is obtained. This is determined by the appearance of the colloid and by compressing it in the hand.

In addition to the ether added in the mixing machines there is added to all powder .4 of one per cent of diphenylamine. This is

Digitized by Google

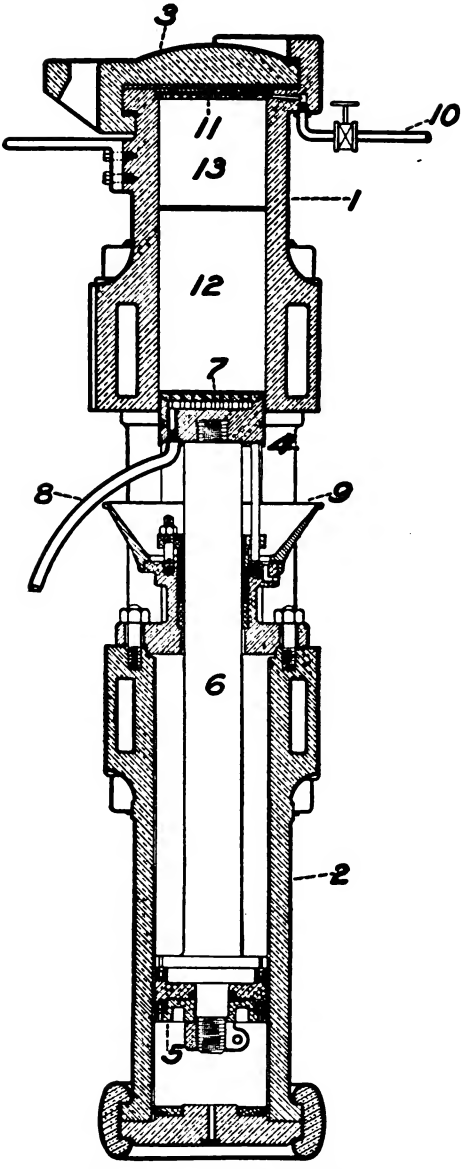

FIG. 10.—Dehydrating Press.

1, powder cylinder. 2, water cylinder. 3, sliding head for powder cylinder. 4, powder cylinder piston. 5, water cylinder piston. 6, piston rod. 7, perforations for passage of water and alcohol. 8, pipe leading to spent alcohol tank. 9, funnel for catching drips. 10, alcohol inlet pipe and valve. 11, perforated gasket. 12, space occupied by block of wet cotton before compression. 13, space occupied by alcohol before compression.

Digitized by Google

a weak base. It prevents the development of acidity in the finished powder and thus increases its chemical stability.

For small arms powder 1% of graphite is also added to the colloid in the mixers and thoroughly incorporated with it. It has been found that the addition of graphite to small arms powder tends to lubricate the bore and prevent metallic fouling.

Preliminary Blocking Press.—The nitrocellulose from the mixers is next taken to the preliminary blocking press, which is a hydraulic press with removable head similar in general features to the dehydrating press. This press compresses the colloid into a solid block easily handled.

Macaroni and Final Blocking Press.—These presses are combined in one machine. The object of the macaroni press is to break up lumps in the colloid and to thoroughly distribute the solvent throughout it. A wire-mesh screen is placed over the perforated head of this press for the purpose of catching grit or other foreign matter as well as such insoluble nitrocellulose as may be present. This screen is changed at each operation of the press.

The final blocking press, directly underneath the macaroni press, is for the purpose of getting the colloid again into the form of a block so as to make it convenient for handling and to prevent the escape of solvent.

Graining Press and Cutting Machine.—The former is a horizontal hydraulic press arranged for pressing the block of colloid from the final blocking press through a die machined to give the proper cross-section to the grain. The press is illustrated in Fig. 11 and a die for 12-in. powder is illustrated in Fig. 12.

For making powders of small granulation, as for instance .30 cal. powder, a large number of dies is required and these may be arranged as shown in Fig. 13.

When a single die is used the string of powder coming from the die is led directly to the powder-cutting machine where it is cut into grains of suitable length.

In making dies for the graining press and in setting the length of cut on the cutting machine allowance has to be made for shrink-

Digitized by Google

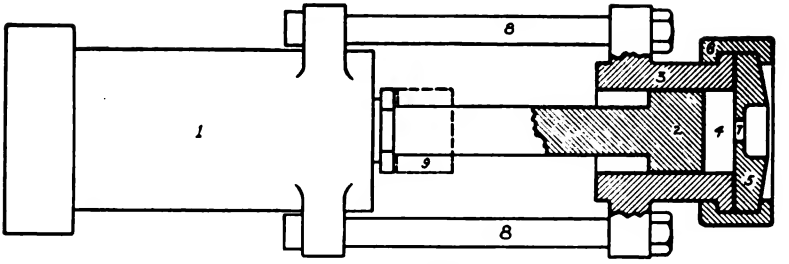

FIG. 11.—Graining Press.

1, water cylinder. 2, piston. 3, powder cylinder. 4, space for powder colloid. 5, powder cylinder head. 6, locking ring for head. 7, threaded hole for powder die. 8, connecting rods between powder and water cylinders. 9, withdrawn position of piston.

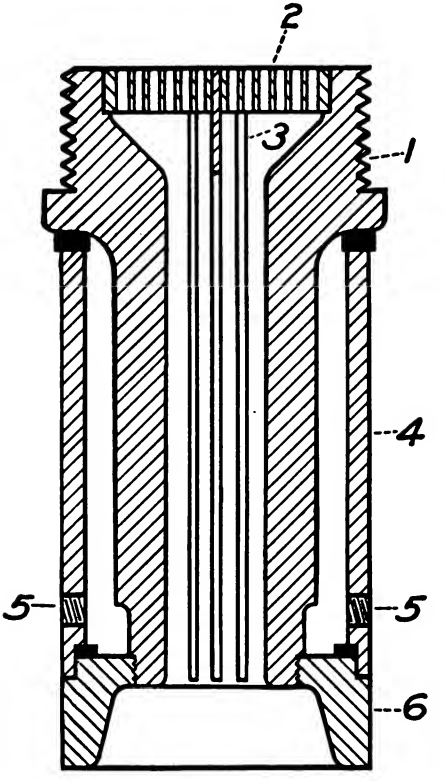

FIG. 12.—Die for Graining Powder.

1, body, steel. 2, perforated plate for holding wires. 3, wires for making perforations in grain. 4, water jacket. 5, inlet and outlet for water used for cooling die while running powder. 6, closing screw for water jacket.

Digitized by Google

age of the powder on drying of solvent. With the percentage of solvent ordinarily used shrinkage amounts to about 30% on the diameter of the die and 10% on the length of cut.

20. Drying, Solvent Recovery and Blending.—*Drying Powder.* As the powder comes from the graining machine it contains from 40% to 50% of solvent. Before the powder can be used the solvent must be dried out so as to leave not over 7% for the largest granu-

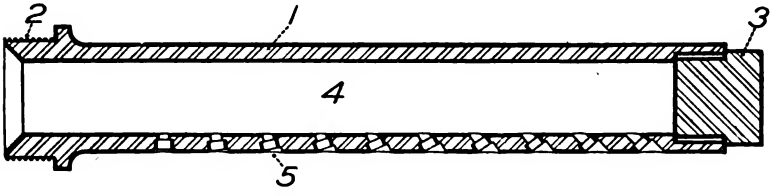

FIG. 13.—Die Holder for Small Arms Die.

1, body. 2, threads for screwing die into press. 3, end closing plug. 4, hollow part into which colloid is pressed. 5, holes for small arms powder dies.

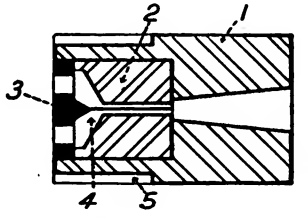

FIG. 13*a*.—Small Arms Powder Die.

1, body. 2, hardened bushing. 3, pin holder. 4, pin. 5, thread for screwing into die holder.

lations and not over 2.5% for the smallest granulations. Drying is done in two operations; in the first the solvent is recovered; in the second the solvent is allowed to escape.

Solvent Recovery Process.—The powder from the cutter is placed in perforated metal baskets which are placed in sealed boxes (see Fig. 14), arranged with steam coils and cold water or brine coils. Warm air from the steam coils passes through the powder, evaporating the solvent, thence over the brine coils where the solvent is condensed and drawn off from the bottom of the box.

Digitized by Google

Solvent recovery boxes are kept at a temperature of about 38° C. The powder is allowed to remain in these boxes for several days or until the percentage of solvent in it is reduced to 12% or 15%.

Dry-houses.—When the solvent has been reduced to 12% or 15% in the solvent recovery process it is no longer profitable to continue the process, as the value of the solvent saved no longer pays for the expense of the operation. The percentage of solvent is then reduced to that required in finished powder by placing

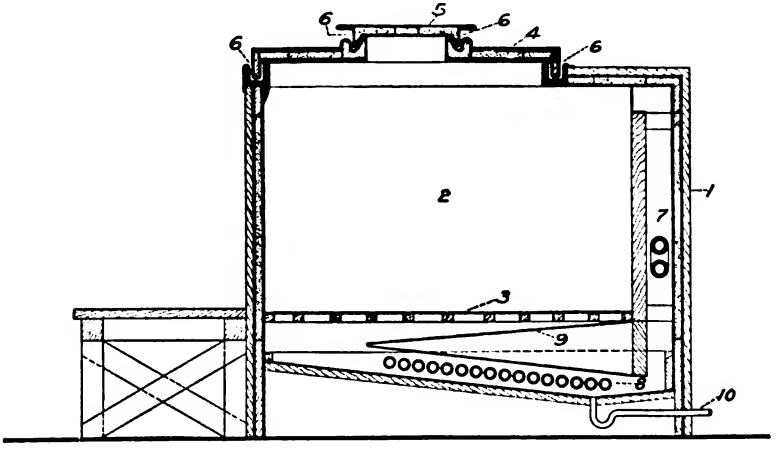

FIG. 14.—Solvent Recovery Box.

1, body of box, wood. 2, space occupied by powder in metal boxes. 3, wire mesh floor. 4, cover. 5, hand hole. 6, water seals: troughs are filled with water to prevent escape of solvent. 7, steam pipes. 8, cold water or brine pipes. 9, baffle for making uniform circulation of heat. 10, recovered solvent pipe.

the powder in dry-houses in which no attempt is made to save the remaining solvent.

Dry-houses for cannon powder usually contain a series of bins with mesh bottoms and sometimes mesh sides as well. Heat may be furnished by blowing heated air into the building or by steam coils placed under the bins, or around the walls of the room. Dry-houses are usually kept at a temperature of 40°–43° C. Temperatures as high as 50° C. have been tried, but high temperatures tend to make the powder brittle. The time required to dry ranges

Digitized by Google

from fifteen days for .30 cal. powder to three months or more for 12-in. powder.

Blending and Boxing.—In order to obtain as great uniformity in ballistics as possible it has been found necessary to thoroughly blend all the powder of a lot before it is sent to the service. For cannon powder this is now generally done by placing the entire lot of powder in the topmost of a series of bins shown diagrammatically in Fig. 15, and successively allowing it to run by gravity to the bins below. The entire lot is run to the middle bin before it is started into the bottom bin, and the entire lot is run into the bottom bin before powder is drawn off and packed in boxes.

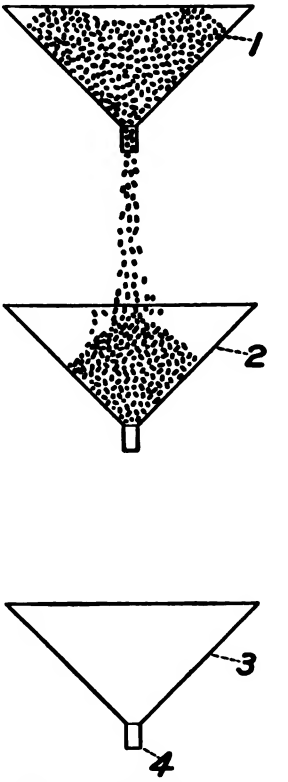

FIG. 15.—Diagrammatic Sketch of Powder Blending Bin.

1, upper bin. 2, middle bin. 3, lower bin. 4, chute from which powder is drawn and packed.

For small-arms powder or other powder of very small granulation blending is usually done by placing the powder in a large tank which, when half full of powder, is slowly rotated.

Small arms powder is always "glazed" by placing loose graphite in the blending tank. It has been found necessary to glaze this powder to make it work properly in the automatic loading machines used for loading cartridges.

Powder is boxed in wooden boxes metal lined and provided with lids so arranged as to be air-tight. It has been found that powder keeps longer and gives more uniform ballistics when thus boxed than when exposed to circulation of air which may contain varying amounts of moisture.

Digitized by Google

Proof and Care of Smokeless Powder and Other Explosives

21. Determination of Moisture and Volatiles.—As has been stated, chemical tests are made at each stage during the process of the manufacture of smokeless powder to determine whether the product complies with the specifications. During the process of drying tests are made to determine the percentage of residual solvent and moisture, generally referred to as moisture and volatiles, remaining in the powder.

It has been found by experience that each size of granulation will retain a certain definite percentage of moisture and volatiles better than a higher or lower percentage. For instance, a 12-in. powder will retain 6.5% of moisture and volatiles very well under service conditions, whereas were the powder originally dried to 4% M and V, it would probably absorb moisture if ever exposed to it, and were the powder originally dried to 8% M and V, it would lose solvent in service.

A 3-in. powder, a smaller granulation than 12-in., will retain 3.5% to 4% M and V very well, but if it were dried to 6% M and V, it would lose solvent readily in service.

For this reason the amount of moisture and volatiles allowed in the finished powder is specified and is larger for large granulations than for small granulations. When the powder reaches the required percentage of moisture and volatiles for the particular granulation, it is removed from the dry houses.

22. Special Tests for Stability.—Tests for stability are made during the manufacture of the powder, immediately after the completion of each lot and at regular intervals as long as the lot remains in service.

KI Starch Paper Test.—This is applied to the finished nitrocellulose during the manufacture of powder. The sample after being properly prepared and dried is heated to 65.5° C. in a glass tube in which is inserted a piece of paper impregnated with potassium iodide and starch.

The test is measured by the length of time required to discolor

Digitized by Google

the paper. The specifications require that the paper shall not be discolored in less than thirty-five minutes.

German Test.—In this test the sample is placed in a glass tube with prepared " methyl-violet " paper and heated at 135° C. The test ends when the methyl-violet paper turns salmon pink. This test is applied both to the finished nitrocellulose and to the finished powder. If applied to the nitrocellulose the time of the test must be at least 35 minutes and if applied to powder the time of the test must be at least one hour and the sample must not explode in less than five hours.

Ordnance Department 115° C. Test.—This test which is applied only to finished powder consists in exposing whole grains of the powder to a temperature of 115° C. for a period of eight hours each day for six days and noting the loss in weight of the samples. The loss in weight must be less than the limit specified for each size of granulation.

Surveillance Test at 65.5° C.—This test is applied only to finished powder and consists in placing samples in sealed bottles in a magazine kept at a constant temperature of 65.5° C. The test ends when red nitrous fumes appear in the bottle. The minimum time of the appearance of these fumes is specified for each size of granulation, being smaller for small granulations than for large granulations.

Tests for Stability of Powder in Service.—The preceding tests relating to finished powder are made immediately after the completion of a lot. After the lot is in the service it is in general not possible to conduct tests at other than magazine temperature. The methyl-violet paper test is now prescribed for all powder in the service. It consists of placing a sample of the powder in a sealed bottle with a piece of methyl-violet paper and storing it in the magazine near the powder under test. If loss in color of the paper does not occur in less than thirty days the test is considered satisfactory. If a sample gives a test in less than thirty days the test should be repeated on a new sample from the same lot.

New test papers are placed in the sample bottles each month

Digitized by Google

and new samples are selected at three or six month intervals. If a powder shows unsatisfactory stability by this test it is segregated from the other lots on hand and samples are sent to a laboratory to be subjected to the stability tests previously described.

23. Measurement of Grains. Physical Test.—In order that the proper ballistic results may be obtained a particular size of granulation of powder is required for each gun. It was noted that a large shrinkage occurs in the grain during the process of drying after granulation. To determine whether the right size of granulation is obtained after drying careful measurements are made on 30 grains selected at random from the lot under consideration. It will be shown later that the most important dimension of a grain is the least burning thickness or the web thickness. The mean result of the measurements of this dimension must be nearly the web thickness prescribed for the gun. In addition the variation of individual measurements from the mean must not be great, that is the grains must be as uniform as possible.

Physical Test.—When a gun is fired the powder grains before being completely consumed are subjected to the enormous pressure of the powder gases in the gun. In addition they may be thrown violently against the walls of the gun or base of the projectile. If the grains are brittle they may be broken into pieces and thus expose a larger surface of powder for burning. This increased burning surface will cause a more rapid evolution of gas and therefore higher pressures in the gun. Since it is not probable that the same number of grains would break at each round, irregular and possibly dangerous pressures might be obtained.

To insure that the grains have sufficient strength to withstand the pressure and blows to which they are subjected a physical test is prescribed. A number of grains are prepared by cutting off the ends so that they form cylinders whose lengths equal the diameters. Each of these cylinders is then slowly compressed endwise between parallel surfaces until a crack appears on the cylindrical surface. The amount of compression when the crack appears must not be less than 35% of the original length of the cylinder.

Digitized by Google

Another test consists in dropping a weight on grains from a height which depends upon the size of the granulation. The number of grains broken by the falling weight must be below a certain percentage of the number tested.

24. Ballistic Test.—This is the final test before the acceptance of a lot of powder. For cannon powders a number of rounds are fired in the gun for which the lot of powder is intended, the charge being increased for successive rounds until a muzzle velocity equal to or greater than that required in the gun is obtained, or until the maximum pressure prescribed for the gun is reached.

The maximum pressures and muzzle velocities are plotted as functions of the charge and the charge required to give the specified muzzle velocity is determined. Three rounds are then fired with this charge. The difference between the muzzle velocities for any two of these three rounds must not be greater than 2% of the mean velocity, and similarly the difference between any two maximum pressures of the group must not be greater than 10% of the mean maximum pressure. For guns of less than 3 ins. caliber these allowed variations are increased 25%.

The muzzle velocity must be obtained with a maximum pressure not greater than that specified for the gun.

Both the pressure and velocity curves must be as smooth as possible, especially there must be no abnormally rapid increase in the pressure for an increase in the charge.

For proof of .30-caliber powders the charge for the required velocity, 2700 ft. per second, is first determined by firing a number of rounds as for cannon powder. Forty consecutive rounds are then fired for velocity. The mean variation from the mean velocity must not exceed 8 ft. per second, and the extreme variation from the mean velocity must not exceed 40 ft. per second. Ten rounds are fired for pressure. The maximum pressure must not exceed 50,000 lbs. per square inch for any round.

25. Effect of Moisture.—If smokeless powder is exposed to a damp atmosphere it will gradually absorb moisture. Decomposition of powder, which is an oxidation process, is facilitated by mois-

Digitized by Google

ture, hence the necessity of keeping the powder protected from damp air. Besides accelerating the decomposition of powder, the absorption of moisture affects the ballistics, the usual effect being to lower the muzzle velocity and maximum pressure for a given charge. To protect against moisture, powder stored in bulk is packed in metal boxes or in wooden boxes metal lined, each with lids supplied with rubber gaskets which are made air-tight.

Powder stored in the form for propelling charges for cannon, that is, charges put up in cartridge bags, is also packed in air-tight metal containers.

Powder assembled in fixed ammunition would appear to be fairly well protected from moisture by the cartridge case, but ever here some dampness may enter the powder through the imperfectly sealed joint between the cartridge case and the projectile, or dampness may enter the primer composition and the time fuse composition. To prevent these possibilities each round of fixed ammunition is packed in a hermetically sealed metal container from which it is not removed until shortly before use. Each complete round of semi-fixed ammunition is likewise packed in a hermetically sealed container.

Effect of Moisture on Other Explosives.—Black powder also readily absorbs moisture. An unusual amount of moisture may entirely destroy its explosive properties. Black powder is stored in iron barrels with tightly closed covers.

Guncotton is made less sensitive to explosion by moisture and for this reason is usually stored wet. When in this condition it requires a stronger primer to effect its detonation but it does not lose in explosive force.

Explosive D does not readily absorb moisture. Such moisture as it may absorb does not effect its stability or explosive force, but increases the difficulty of complete detonation. Explosive D is packed in double paper bags placed in wooden kegs.

26. Effect of High Temperature.—*Storage.*—Smokeless powder deteriorates much more rapidly at a high temperature than at a low temperature. This is especially so if moisture has access to

Digitized by Google

the powder. Great variations in temperature should be avoided because the resultant changes in the dimensions of the metal containers may develop leaks. By causing a difference in the atmospheric pressure inside and outside of the containers, changes in the temperature tend to cause alternate drawing in and expulsion of the air through these leaks, the moisture in the air drawn in being absorbed by the powder.

Magazines.—To avoid the bad effects due to moisture and high temperature, powder should be stored in magazines or other storage places not subject to these conditions. Preferably the walls of the building should be thick and the roof well insulated against the heat of the sun. The building should admit of proper ventilation, which should be under such control that air will not be admitted where it would result in condensation of moisture in the magazine. Powder or ammunition boxes should be raised off the floor and should be separated from each other so as to permit of free circulation of the air.

Preparation of Propelling Charges

27. Forms of Propelling Charges.—Guns are loaded either with fixed, semi-fixed or separate loading ammunition.

Fixed ammunition is that in which the cartridge case, the propelling charge and the projectile are assembled and loaded into the gun at the same time. All of our guns below 5 ins. in caliber, including the .30-cal. rifle use fixed ammunition. In fixed ammunition the powder charge is placed loose in the cartridge case, the latter being filled if necessary by packing paper, excelsior, or felt next to the projectile so as to hold the charge in contact with the primer. In some fixed ammunition a brass diaphragm is soldered to the inside of the case above the powder to hold the powder against the primer and to prevent the entrance of moisture.

The igniting charge of black powder is included in the primer which is inserted in the head of the case. In some fixed ammunition an additional charge of igniting powder is used in which case

Digitized by Google

it is contained between two disks of quilted crinoline at the forward end of the charge.

Semi-fixed ammunition is that in which the propelling charge is contained in a cartridge case not attached to the projectile.

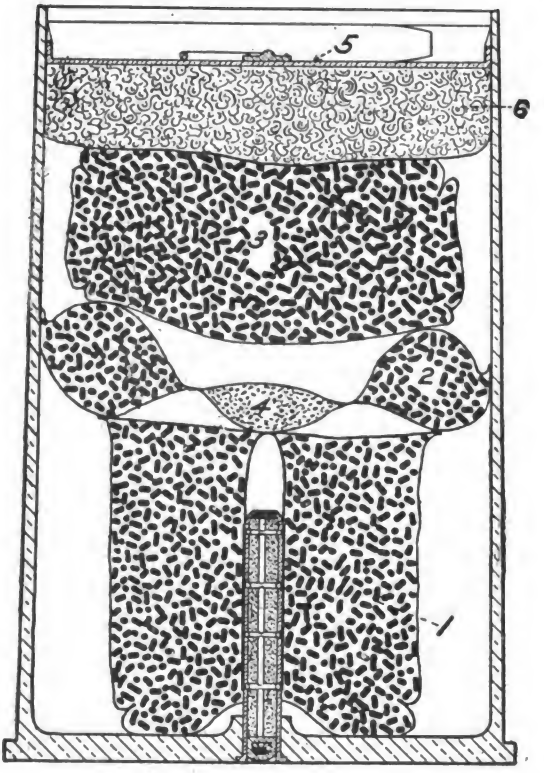

FIG. 16.—Cartridge Case for 6-in. Field Howitzer.

1, first zone powder bag. 2, second zone powder bag. 3, third zone powder bag. 4, igniting charge. 5, brass diaphragm. 6, filling material, excelsior or felt.

Semi-fixed ammunition is used in our service in field howitzers in which three weights of propelling charges are used in order to obtain the three zones of fire necessary for high-angle fire with these howitzers. The full propelling charge consisting of three bags of powder is assembled in the case when the ammunition is made

Digitized by Google

up and the charge is the one for the third zone. In case it is desired to fire in the second or first zone, one or two bags, respectively, are removed, and the removal is facilitated by having the cartridge case separate from the projectile.

The same primer is used as in fixed ammunition, and in some cases an additional igniting charge is attached to the second zone charge.

The case is sealed by a brass diaphragm soldered to the forward end by means of a soldering strip in such a manner as to be easily removable in case it is desired to change the charge by removing one or two of the bags. The cartridge case for the 6-in. field howitzer is illustrated in Fig. 16.

Separate loading ammunition includes all that in which the propelling charge, in bags, is placed directly in the chamber of the gun.

Practically all of our guns 5 ins. and above in caliber use separate loading ammunition. The number of separate bags used for each propelling charge is so adjusted that the weight of each is not greater than can be readily handled by one man. In the 12-in. gun the charge, weighing about 270 lbs., is held in four bags, while in the 10-in. gun the charge, weighing 155 lbs., is held in two bags.

28. Cartridge Bags.—These bags are made of special raw silk and are sewed with silk thread. The ends of each bag are double and between the two pieces at each end is placed an igniting charge of black powder quilted in squares of about 2 ins. on a side and uniformly spread over the surface. The bags are filled by opening a seam at one end. After filling, the seam is sewed up and the bag is made tight around the charge by lacing drawn through two pleats on the exterior. (See Fig. 17.) The bags for large-caliber guns are reenforced so as to prevent bulging by sewing a central core of cartridge bag material to the two ends on the inside of the bag. Wings extending from this central core are sewed to the sides.

Flareback.—While bags made of cotton cloth sometimes leave burning fragments in the bore after firing, bags made of raw silk either burn up completely or the fire on any parts which may

Digitized by Google

remain unburned goes out immediately. The gas from smokeless powder is explosive providing sufficient oxygen or air is added to it. It is thus possible, when the breech of a gun is opened immediately after firing, that enough air may enter the bore to form with the gas still in the bore an explosive mixture which may be ignited

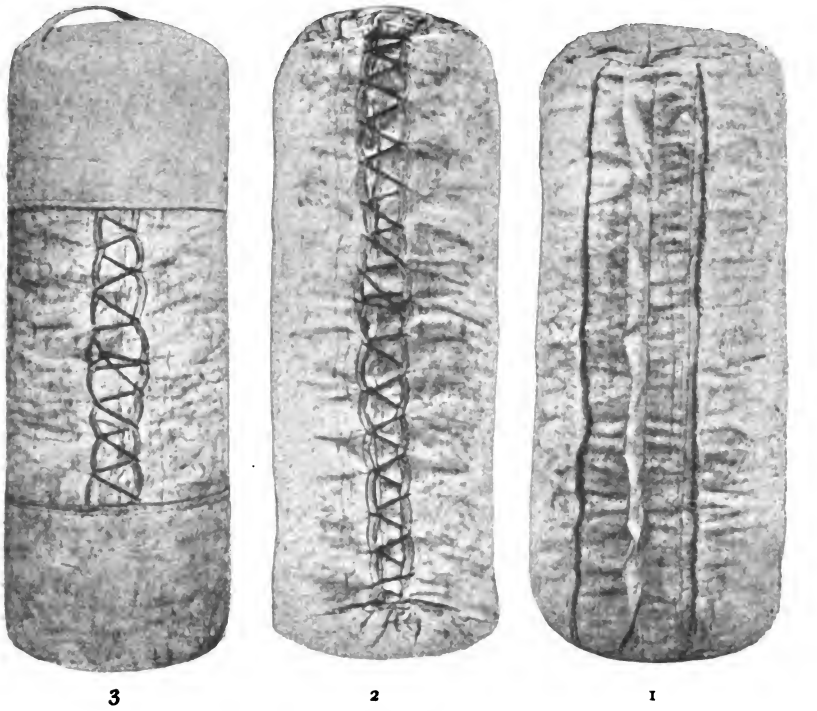

FIG. 17.—Sections of Powder Charge for Heavy Guns.
1, bag filled and ready for lacing. 2, bag laced. 3, bag laced and supplied with protector caps.

by a piece of burning cartridge bag. An explosion of this nature is known as a flareback. A flareback may also occur, especially in rapid firing, due to the high temperature of the gas remaining in the bore causing a spontaneous explosion as soon as the breach is opened. Guns mounted in turrets are now provided with an arrangement by which a jet of air is blown into the gun from the

Digitized by Google

breech end as soon as the breech is opened, thus driving from the muzzle any gas which might form an explosive mixture as well as any unburnt pieces of cartridge cloth.

29. Central Core Igniting Charge.—In the bags for 5- and 6-in. guns and in the base charges for 12-in. mortars, the central core is made hollow and contains some of the igniting charge. The central disposition of the igniting charge gives more uniform ignition

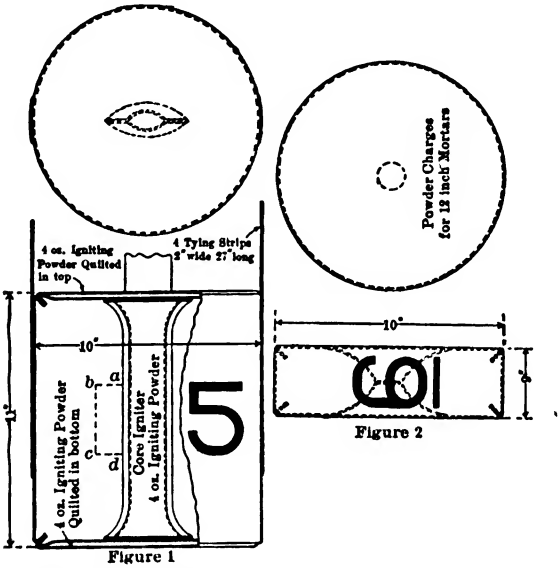

FIG. 18.—Bags for Base Charge and Increment Charge for 12-in. Mortar.

of the smokeless powder charge and consequently more uniform muzzle velocity. It is likely that a similar disposition of the igniting charge will be made for other guns using separate loading ammunition. Greater advantage is obtained from the central disposition of the igniting charge providing the entire smokeless powder charge is placed in a single bag. If the single bag is adopted for large caliber guns, special arrangements will have to be made for handling the charge. It is probable that the charge made up in a single bag will be kept in a cylindrical metal container with

Digitized by Google

removable lids at both ends. The container will be brought to the gun on a truck similar to the shot truck and, after removing both lids, the charge will be rammed through the container into the gun.

12-In. Mortar Charges.—In the 12-in. mortar, the field of fire is divided into from 6 to 9 zones, each requiring a different muzzle velocity and some requiring a projectile of different weight. A different charge is therefore required for each zone. To permit a change of ammunition from one zone to another, mortar charges as made up consist of base charges and one or two increments for each base charge. (See Fig. 18.) Each base charge is in a single bag, and each increment, when used, is in a single bag tied to the forward end of the base charge by means of ribbons of cartridge cloth sewed to the base charge bag. The increments are small compared with the base charge. By removing one or two increments from the charge as made up, we obtain the charges for the next two lower zones.

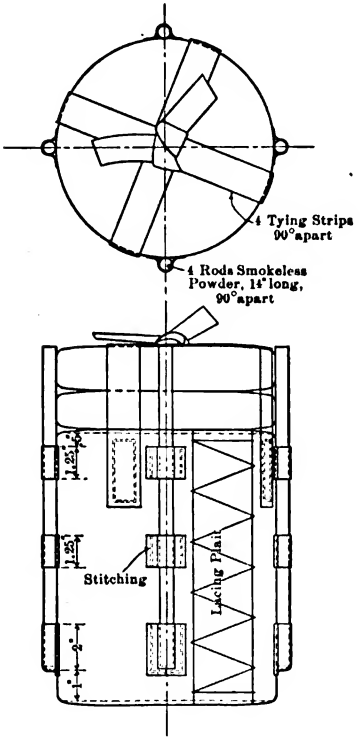

FIG. 19.—12-in. Mortar Bag Showing Rods of Powder for Increasing Rigidity.

In order to make mortar charges containing increment charges more rigid for handling, four rods of smokeless powder the length of the entire charge are passed through loops of cartridge cloth attached to the outside of the base charge bag and 90° apart on the circumference. These rods prevent the increment charges from

Digitized by Google

slipping sidewise on the base charge and add rigidity to the entire charge. (Fig. 19.)

30. **Blank Charge.**—Blank charges are used in maneuvers and for salutes. Smokeless powder in the form used in service charges is not suitable for blank charges because the pressure developed is as a rule not sufficient to cause the powder to burn up, and the report is not nearly as loud as that obtained with service charges. There have been a number of cases, however, where dangerously high pressures have been obtained with smokeless powder blank charges. On account of the irregular action of smokeless powder when used in blank charges, black powder is generally used for this purpose, though successful results have been obtained with a special smokeless powder known as Thorn maneuver powder.

This powder is granulated in cross-shaped disks, is of low density and has the appearance of blotting paper. Good results have also been obtained with the shavings of ordinary smokeless powder obtained by turning down rods of the latter in a lathe.

Digitized by Google

CHAPTER II

THEORY OF EXPLOSIVES

Determination of Quantity of Heat at Constant Pressure

31. Object of Theoretical Calculations.—The general considerations as to the action of explosives enunciated at the beginning of Chapter I, together with certain principles of thermo-chemistry to be stated, enable us to calculate the effects produced by explosives when the chemical reaction on explosion is known.

The reaction can in many cases be predicted from the chemical composition of the explosive and can in all cases be determined by chemical analysis of the products of explosion.

Theoretical calculations enable us to compare proposed explosives with others whose properties are known and thus to obtain information concerning them which could be experimentally determined only by a series of expensive tests. The principles to be determined apply both to low and to high explosives.

Unless otherwise stated French units will be used in this discussion.

Definitions of terms used in thermo-chemistry will first be given.

Molugram.—This term is used to designate a weight of as many grams as there are units in the molecular weight of the substance considered. Thus, the molecular weight of CO_2 is 44. The molugram of CO_2 is therefore 44 grams.

The molugram of a mixture has a weight in grams equal to the sum of the molecular weights of as many molecules of each constituent as appear in the formula for the mixture. Thus the molugram of $2C_6H_2(NO_2)_3OH+NH_4NO_3$ is 538 grams.

Thermal Unit.—The thermal unit is the amount of heat required to raise the temperature of a unit weight of water from the standard

Digitized by Google

temperature to one degree of the thermometer above that temperature.

There are two thermal units in general use, the calorie and the British thermal unit or B.T.U.

Calorie.—A small calorie is the quantity of heat required to raise the temperature of 1 gram of water (1 cubic centimeter), from 0° to 1° C. A large calorie is 1000 small calories.

British Thermal Unit.—The B.T.U. is the amount of heat required to raise 1 lb. of water from the freezing point to 1° F. above that point.

Exothermic and Endothermic Reactions.—An exothermic reaction gives off heat. An endothermic reaction absorbs heat. Since heat must be supplied to the latter to cause it to take place, endothermic reactions are not as usual as exothermic reactions.

32. Practical Determination of the Quantity of Heat.—The quantity of heat given off by an explosive may be measured experimentally by means of an instrument called the calorimeter, illustrated in Fig. 20.

The instrument consists of a strong steel bomb 1 closed by a screw cap 5 and containing a cup 4 holding the explosive to be experimented with. The end of the insulated wire 6 which carries the current for firing the explosive, is grounded on the cup 4 by a fine iron wire which is heated sufficiently on passage of the current to fire the explosive. A needle valve 7 permits oxygen under pressure to be drawn into the bomb, so as to facilitate the firing of the explosive, or permits the products of combustion to be drawn from the bomb for analysis. The bomb is placed in a double-walled vessel 3 filled with water and having an air space between the walls. The second large vessel surrounding the double-walled vessel is also sometimes filled with water to prevent sudden changes of temperature around the double-walled vessel. For the same reason the outside vessel is covered with felt, 11.

When the explosive is fired the resulting heat is communicated to the water surrounding the bomb, causing a rise in temperature. In order that the heat may be as uniformly distributed throughout

Digitized by Google

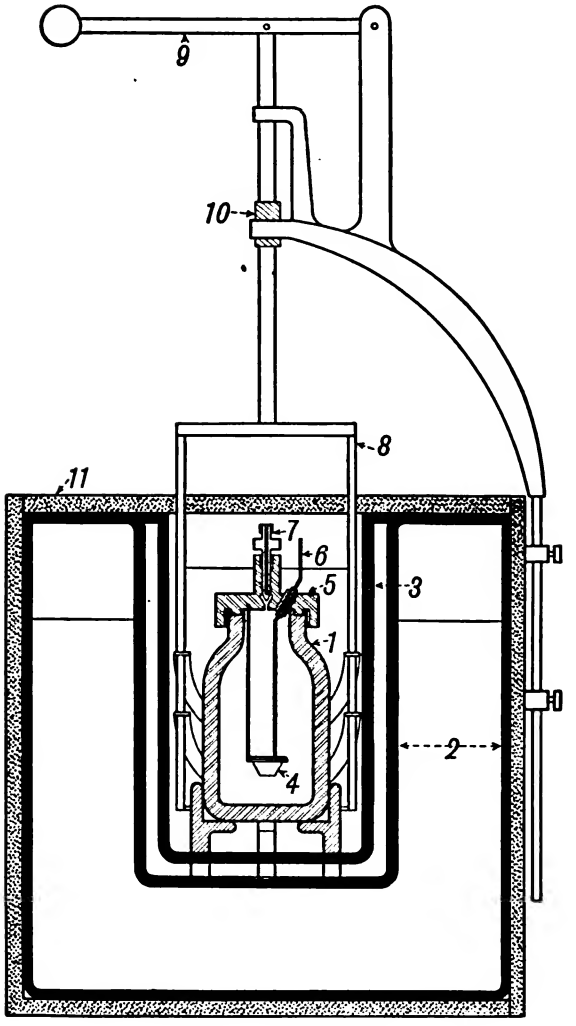

FIG. 20.—Calorimeter.

1, steel bomb. 2, outside vessel. 3, double-walled vessel. 4, cup for holding explosive. 5, cover of bomb. 6, ignition wire. 7, needle valve. 8, 9, 10, stirring apparatus. 11, felt cover.

Digitized by Google

the water as possible a stirring apparatus 8, 9 and 10 is provided. After the explosion the temperature of the water is read at half minute intervals until it reaches a maximum. The weight of water in the vessel and its rise in temperature being known, it is easy to calculate the amount of heat that has been communicated to the water. After correction has been made for loss of heat to the bomb and vessel, we obtain the quantity of heat given off by the explosive.

33. **Heats of Formation.**—The heat liberated or absorbed per molugram when a compound is formed from its elements is known as the heat of formation of the compound. By the use of the calorimeter and by application of the principle given in the next article, the heats of formation of most chemical compounds have been determined. A number of them are tabulated in Table V at the end of the book. In the tabulated heats of formation it is assumed that the compounds and their elements were both brought to 15° C. and that the reaction took place at constant (atmospheric) pressure. It will be shown that the heat given off in an exothermic reaction is greater when the reaction takes place in a constant volume than when it takes place at a constant pressure and at a variable volume. Heats of formation are given in large calories per molugram.

34. **Principle of the Initial and Final State.**—This principle first enunciated by Berthelot is as follows: The heat liberated (or absorbed), in any chemical modification of a system of simple or compound bodies, effected without external mechanical work, depends solely on the initial and final states of the system. It is completely independent of the intermediate transformations. From this it follows that the heat liberated in any transformation accomplished through successive reactions is the algebraic sum of the heats liberated in the different reactions.

We may therefore consider the formation of an explosive as an intermediate reaction in the formation of the products of explosion from simple elements. If, then, we subtract from the total heat liberated when the products of explosion are formed from their elements, the heat liberated on the formation of the explosive

Digitized by Google

from its elements, the difference will be the heat liberated in the reaction of the explosion.

The quantity of heat liberated, or absorbed, in the reaction is independent of the time occupied in the reaction.

35. Theoretical Determination of Quantity of Heat at Constant Pressure.—If the reaction on explosion is known or has been determined, the chemical formula for it may be written. The heats of formation of the explosive and of the products of explosion may then be found by reference to Table V. The sum of the heats of formation of the products of explosion less the heat of formation of the explosive itself is the heat given off on explosion.

EXAMPLE 1.—The explosion of nitroglycerine is represented by the following reaction:

Molecular Wts. = 454 264 90 84 16

$$2C_3H_2(NO_2)_3(OH)_3 = 6CO_2 + 5H_2O + 3N_2 + \tfrac{1}{2}O_2.$$

With the heats of formation from Table V, we obtain as the heat of formation of the products of explosion

$6C_2O$ . . . . . $6 \times 94.3 = 565.8$ large cal.
$5H_2O$ . . . . . $5 \times 58.3 = 291.5$ large cal.

Total . . . . . 857.3 large cal.

We take the heat of formation of water that for water gaseous. While water is not gaseous at 15° C. it is gaseous at the temperature of explosion or at any temperature the products of combustion may have when their properties are worth investigating. Nitrogen and oxygen being simple elements have no heats of formation.

We now have to subtract from this total the heat of formation of 2 molecules of nitroglycerine, or

$2C_3H_2(NO_2)_3(OH)_3$, $2 \times 98 = 196$ large cal.

The difference, 661.3 large calories, is the heat given off on the explosion of 2 molugrams of nitroglycerine at constant pressure when the explosive is at a temperature of 15° C. and the products of explosion are cooled to the same temperature.

Digitized by Google

Representing by Q_{mp} the heat given off on the explosion of 1 molugram, we have for nitroglycerine,

$$Q_{mp} = 330.7 \text{ large calories.}$$

Representing by Q_{kp} the heat given off on the explosion of 1 kilogram, we have for nitroglycerine,

$$Q_{kp} = 330.7 \times \tfrac{1000}{227} = 1456.8 \text{ large calories.}$$

When Solid Products are Formed.—If the explosion produces solid products the heats of formation of these bodies are added to the heats of formation of the gases in the determination of Q_{mp} and Q_{kp}.

EXAMPLE 2.—A mixture of mononitrobenzene with sufficient potassium chlorate to make the combustion of the mononitrobenzene complete is exploded.

The reaction is

Mol. Wts. = 1266.8 528 90 28 620.8

$$2C_6H_5NO_2 + \tfrac{2}{3}KClO_3 = 12CO_2 + 5H_2O + N_2 + \tfrac{2}{3}KCl.$$

A molugram of a mixture is the sum of the molecular weights in grams of as many molecules of each of the constituents as appear in the reaction. The molugram of this explosive mixture is therefore $2 \times 123 + \tfrac{2}{3} \times 122.5 = 1266.8$ grams.

Heats of formation:

$12CO_2$,	$12 \times 94.3 =$	1131.6
$5H_2O$,	$5 \times 58.3 =$	291.5
$\tfrac{2}{3}KCl$,	$\tfrac{2}{3} \times 105 =$	875
		2298.1
$2C_6H_5NO_2$,	$2 \times 5.1 =$	10.2
$\tfrac{2}{3}KClO_3$,	$\tfrac{2}{3} \times 93.8 =$	781.7
		791.9

$$Q_{mp} = 2298.1 - 791.9 = 1506.2 \text{ large cal.}$$

$$Q_{kp} = \frac{1506.2 \times 1000}{1266.8} = 1187.4 \text{ large cal.}$$

Digitized by Google

PROBLEMS

1. The explosion of ammonium picrate is represented by the following reaction:

$$2C_6H_2(NO_2)_3ONH_4 = 3CO_2 + 8CO + 6H_2 + 4N_2 + \tfrac{1}{2}C_2.$$

How much heat is given off by the explosion of 5 grams of the picrate?

Ans. 3.33 large calories.

2. Explosive gelatine (4% camphor) has the following reaction equation:

$$43C_3H_2(NO_2)_3(OH)_3 + C_{24}H_{31}(NO_2)_9O_{20} + 3C_{10}H_{16}O =$$
$$153CO_2 + 30CO + 92H_2O + 55H_2 + 69N_2.$$

How much heat would be given off by the explosion of 1 kilogram of this explosive? Ans. 1370.8 large calories.

Properties of Gases and Thermodynamics

36. Properties of Gases.—We have thus explained the theoretical method of determining the heat given off by an explosive when exploded at atmospheric pressure. When exploded under this condition the gases do mechanical work in pushing back the surrounding air. The amount of heat required for doing this work is not included in the results of our calculations. It remains to determine the heat that would be given off if the explosive were exploded in a constant volume, that is, without doing mechanical work. We have also to determine the volume of gases produced by a given weight of the explosive, the temperature of the gases, and the pressure developed when a given weight of the explosive is exploded in a given volume. Before proceeding with these determinations it will be desirable to review the properties of gases and thermodynamics, subjects already studied in the courses in chemistry and mechanics.

Specific Volume.—The specific volume of a gas is the volume of a unit weight of the gas at 0° C. temperature and the normal atmospheric pressure of 14.7 lbs. per square inch, or 103.33 kilograms per square decimeter.

The specific weight of a gas is the weight of a unit volume

Digitized by Google

of the gas under the above conditions as to temperature and pressure.

Molecular Volume.—The molecular volume of a gas is the volume of 1 molugram of the gas under the same conditions as specified for the specific volume, that is, at 0° C. temperature and normal atmospheric pressure.

37. Laws of Perfect Gases.—The following experimental laws, usually called the laws of perfect gases, were at one time supposed to apply to all gases under all conditions of pressure and temperature.

Law of Avogadro.—Equal volumes of all gases under the same conditions of temperature and pressure contain the same number of molecules.

It follows from this experimental law that the molecular volumes of all gases are equal.

The molecular volume of all gases is 22.32 liters or cubic decimeters. Knowing the molecular volume we may determine the volume of a given weight of gas or the weight of any given volume at a temperature of 0° C., and under normal atmospheric pressure. For instance, we may determine the specific volume or the specific weight.

Mariotte's Law.—At constant temperature the pressure of a given weight of gas varies inversely as the volume occupied by it.

Gay-Lussac's Law.—At a constant pressure the coefficient of expansion for a gas for 1° rise in temperature is constant for all temperatures and pressures.

The coefficient for 1° C. rise in temperature is $\frac{1}{273}$.

Later experiments proved that these laws were only approximately accurate for actual gases and that the variation of actual gases from these laws increased as the pressure increased and as the temperature decreased. While the laws were thus proved inaccurate for actual gases they are, on account of their simple form, of use in studying the behavior of actual gases. The hypothetical gases to which these laws apply exactly are known as perfect gases. No perfect gases exist, but permanent gases, such

Digitized by Google

as hydrogen, oxygen and nitrogen, show less variation from these laws than easily condensible gases, such as carbon dioxide, ethylene, steam and other vapors.

The following discussion applies to perfect gases:

Let p_0 = the normal atmospheric pressure = 103.33 kilograms per square decimeter, or 14.6967 lbs. per square inch.

v_0 = the specific volume of the gas = the volume of a unit weight of gas at 0° C. and normal atmospheric pressure = a constant for the given gas.

v_{0t} = the volume of a unit weight of gas at t° C. and normal atmospheric pressure.

p = any pressure to which a unit weight of gas may be subjected.

v = the volume occupied by a unit weight of gas at t° C. and pressure p.

We then have by Mariotte's law at 0° C.,

$$pv_{(t=0)} = p_0v_0 = \text{a constant}, \quad . \quad . \quad . \quad . \quad . \quad . \quad (1)$$

and at t° C.,

$$pv = p_0v_{0t} = \text{a constant}. \quad . \quad . \quad . \quad . \quad . \quad . \quad (2)$$

By Gay-Lussac's law,

$$v_{0t} - v_0 = \frac{t}{273} v_0, \quad . \quad . \quad . \quad . \quad . \quad . \quad . \quad . \quad (3)$$

or

$$v_{0t} = v_0\left(1 + \frac{t}{273}\right) \quad . \quad . \quad . \quad . \quad . \quad . \quad (4)$$

38. Characteristic Equation of Perfect Gases.—Combining equation (4) with Mariotte's law, equation (1), and eliminating v_{0t}, we have,

$$pv = p_0v_0\left(1 + \frac{t}{273}\right), \quad . \quad . \quad . \quad . \quad . \quad . \quad (5)$$

which may be written,

$$pv = \frac{p_0v_0}{273}(273 + t). \quad . \quad . \quad . \quad . \quad . \quad . \quad (6)$$

$$\text{Placing } \frac{p_0v_0}{273} = R = \text{a constant for a given gas}, \quad . \quad . \quad (7)$$

Digitized by Google

and, $273+t=T$, or the absolute temperature on the centigrade scale, we finally have,

$$pv=RT. \quad . \quad . \quad . \quad . \quad . \quad . \quad . \quad . \quad (9)$$

This is known as the characteristic equation of perfect gases. It may be applied to actual gases with fair accuracy when the pressures to be considered are moderate and the temperatures to be considered are well above the condensation temperatures of the gases. Even then the range of pressure and temperature to be considered must not be too great. For unusual pressures and temperatures such as occur in the gases from explosives it ceases to be a close enough approximation and the modification of this equation given in the next article is used.

Characteristic Equation Applied to any Weight, c, of Perfect Gas.—The above equations apply to a unit weight of perfect gas.

Let V be the volume of any weight of perfect gas, c, under any conditions of temperature and at a pressure P.

It is evident that the equation

$$PV=cRT, \quad . \quad . \quad . \quad . \quad . \quad . \quad . \quad . \quad (10)$$

holds good.

At a temperature T' the volume and pressure may both change, and we will have,

$$P'V'=cRT'. \quad . \quad . \quad . \quad . \quad . \quad . \quad . \quad (11)$$

Dividing equation (10) by this equation we have,

$$\frac{PV}{P'V'}=\frac{T}{T'}, \quad . \quad . \quad . \quad . \quad . \quad . \quad . \quad (12)$$

from which we see that if the pressure of any weight of perfect gas remains constant, that is, if $P=P'$, the volume will vary as the absolute temperature, and if the volume remains constant, that is, if $V=V'$, the pressure will vary as the absolute temperature.

Digitized by Google

PROBLEMS

(NOTE: All the gases in these problems are to be considered perfect gases.)

1. A certain gas occupies unit volume at normal temperature and pressure.

(*a*) The temperature is increased to 100° C. What is then the pressure?

Ans. 20.08 lbs. per sq. in.

(*b*) Keeping the temperature at 100° C., the gas is compressed to one-third its original volume. What is now the pressure?

Ans. 60.25 lbs. per sq. in.

(*c*) Keeping the volume as in (*b*), the gas is cooled to −150° C. What is the pressure? Ans. 19.87 lbs. per sq. in.

(*d*) The volume still remaining as in (*b*), the gas is allowed to come to normal temperature. What is the pressure? Ans. 44.09 lbs. per sq. in.

2. Two grams of hydrogen occupy 22.32 liters (cu. dec.) under normal conditions. What would be the pressure due to confining one gram in a volume of ten liters at a temperature of 125° C.?

Ans. 168.13 kg. per sq. dec.

3. What is the lifting power at 70° F. (21°.11 C.) and 30 in. barometer of 1000 cubic feet of each of the following gases: Air, hydrogen, coal gas, water gas? Consult Table II.

Answer.

	Volume 1 lb. at 70°.	Pounds in 1000 cu. ft.	Lifting power of 1000 cu. ft. in lbs.
Air	13.35	74.91	
Hydrogen	191.66	5.22	69.69
Coal gas	26.5	37.73	37.18
Water gas	19.49	51.31	23.60

4. A certain Zeppelin has a capacity of 224,244 cu. ft., and weighs with its car and machinery 6600 lbs. What will be its lifting capacity when filled with hydrogen at 10° C. and 30 ins. barometer? Ans. 9643 lbs.

5. A spherical balloon 20 ft. in diameter is to be inflated with hydrogen at 60° F., barometer 30.2 ins., so that gas may not be lost on account of expansion when the balloon has risen until the barometer is at 19.6 ins. and the temperature 40° F. How many cu. ft. of gas must be put in the balloon?

The gas pressure in the balloon is in equilibrium with the atmospheric pressure. The weight of gas occupying the balloon must be such that at

Digitized by Google

40° F. the pressure will be in equilibrium with a barometric pressure of 19.6 ins.

v = volume of balloon = 4188.8 cu. ft.

Absolute zero = −459.4° F.

Ans. 2827.4 cu. ft.

6. To what temperature would it be necessary to heat 10 grams of hydrogen confined in a 130-liter vessel in order that a pressure of 1000 kilograms per sq. dec. may be obtained? Ans. 2804.6° C.

7. One pound of air occupies 12.39 cu. ft. under normal conditions. What is the volume occupied by 5 lbs. at a temperature of −50° C. and under a pressure of 10 lbs. per sq. in. Ans. 74.37 cu. ft.

39. **Characteristic Equation of Actual Gases.**—If the equation $pv = RT$ were true for actual gases the product pv for any gas would remain constant at any fixed temperature, regardless of the value of p. Also, the product pv would increase directly with the absolute temperature.

To test the accuracy of the equation as applied to actual gases, Amagat and other investigators compressed gases at various constant temperatures and accurately measured the corresponding volumes and pressures.

They then plotted the product, pv, for various gases, at various constant temperatures as a function of the pressures p. As a result the following conclusions were reached:

1. At constant ordinary temperature, the product pv is not a constant for any actual gas.

2. At constant ordinary temperature, the product pv for all gases except hydrogen decreases as the pressure is raised from the atmospheric pressure until it reaches a minimum value, after which it increases.

3. At constant ordinary temperature, the product pv for hydrogen, increases indefinitely as the pressure is raised from the atmospheric pressure.

4. At temperatures sufficiently lower than the ordinary temperature hydrogen follows the law for other gases given in 2, and

Digitized by Google

at temperatures sufficiently higher than the ordinary temperature the other gases follow the law for hydrogen given in 3.

5. Below a certain temperature, definite for each gas, the product pv corresponding to the temperature selected, decreases through a certain range without change in the pressure. The temperature below which this effect takes place is known as the *critical temperature* of the gas.

During the time that the product pv is decreasing without change in p the gas is being converted into a liquid by the pressure p. Above the critical temperature no such effect takes place to whatever extent the pressure is raised.

The critical temperature of a gas may therefore be defined as the temperature above which the gas cannot be liquefied by pressure.

Many attempts have been made to represent these experimental results by an equation which would show the relation between pressure, volume and temperature of actual gases in the same way that the characteristic equation shows this relation for perfect gases.

The following equation, due to Clausius, which is one of several proposed by Van der Waals and Clausius, represents the behavior of actual gases with fair accuracy for all pressures and temperatures:

$$p(v-\alpha)=RT-\frac{c(v-\alpha)}{T(v+\beta)^2}, \quad . \quad . \quad . \quad . \quad . \quad (13)$$

α, β, c and R are constants to be determined by experiment for each gas. The second term of the second member becomes very small for high temperatures and pressures. As in the use of explosives we generally deal with high temperatures and pressures we may, in applying the equation to explosives, neglect this term and write the equation as follows:

$$p(v-\alpha)=RT. \quad . \quad . \quad . \quad . \quad . \quad . \quad . \quad (14)$$

Comparing this equation with the characteristic equation for perfect gases, we find that the only difference is in the introduction of the subtractive constant α.

Digitized by Google

40. Co-volume.—The constant α is known as the co-volume of the gas and is defined as the smallest volume to which a unit weight of the given gas can be compressed whatever the amount of pressure used. This is apparent from a consideration of equation (14). At a given temperature the second member of this equation is a constant. As the pressure increases the volume decreases, the latter approaching α as the pressure approaches infinity.

Since if an infinite pressure were applied the molecules of the gas would be pressed together so as to be in contact, we may define the co-volume of a gas as the actual volume of the molecules in a unit weight of gas.

The following table gives the co-volumes of various gases as determined by Amagat and other investigators. The specific volume is here taken as the unit volume. To get the co-volume in the same unit in which the specific volume is given, multiply the values in the table by the specific volume.

Gases.	Co-volume Specific volume = 1.
Hydrogen	0.000881
Nitrogen	0.001763
Oxygen	0.001392
Steam	0.001457
Carbon Dioxide	0.001813
Carbon Monoxide	0.001723
Air	0.001662

For powder gases we shall assume the co-volume to be $\frac{1}{1000}$ of the specific volume.

41. Modification of the Laws of Perfect Gases for Application to Actual Gases.—Equation (14) may be deduced from the laws of Mariotte and Gay-Lussac for perfect gases if these laws are modified by considering the volume as being the actual volume minus the co-volume.

Digitized by Google

Thus equation (2), Mariotte's law, at a temperature $t°$ C., becomes

$$p(v-\alpha)=p_0(v_{0t}-\alpha). \quad . \quad . \quad . \quad . \quad . \quad (15)$$

and equation (4), Gay-Lussac's law, becomes,

$$v_{0t}-\alpha=(v_0-\alpha)\frac{T}{273}. \quad . \quad . \quad . \quad . \quad . \quad . \quad (16)$$

By combining these two equations we have,

$$p(v-\alpha)=p_0(v_0-\alpha)\frac{T}{273}, \text{ and by} \quad . \quad . \quad (17)$$

$$\text{placing } R=\frac{p_0(v_0-\alpha)}{273}, \quad . \quad . \quad . \quad . \quad . \quad . \quad . \quad (18)$$

we obtain equation (14).

As stated above equation (14) applies with accuracy only at high pressures and temperatures, and therefore the constant R should be determined under those conditions rather than by the method given in equation (18), which assumes atmospheric pressure and o° C. temperature. For comparative purposes, however, the latter method of determining R may be used. The relation between R and the specific heats of gases will be given later.

Application of modified law to any weight c of actual gas.

Referring to article 38 we have since the co-volume of a weight c of gas is αc,

$$P(V-\alpha c)=cRT \quad . \quad . \quad . \quad . \quad . \quad . \quad (19)$$

and for another condition of pressure volume and temperature

$$P'(V'-\alpha c)=cRT' \quad . \quad . \quad . \quad . \quad . \quad . \quad (20)$$

from which we obtain

$$\frac{P(V-\alpha c)}{P'(V'-\alpha c)}=\frac{T}{T'} \quad . \quad . \quad . \quad . \quad . \quad . \quad (21)$$

Digitized by Google

PROBLEMS

1. Suppose hydrogen to be confined in a vessel at normal temperature and under normal pressure.

(*a*) The temperature is increased to 100° C. What is then the pressure?

Ans. 20.06 lbs. per sq. in.

(*b*) Keeping the temperature at 100° C., the hydrogen is compressed to one one-hundredth its original volume. What is now the pressure?

Ans. 2198.2 lbs. per sq. in.

2. What would be the pressure due to confining 1 gram of carbon dioxide in a volume of .036 liter at a temperature of 500° C.?

Ans. 42232.2 kg. per sq. dec.

3. A volume of 3 cu. ft. of air, confined at 0° C. and 30 ins. barometer, is heated to a temperature of 300° C. What pressure does it exert?

Ans. 30.85 lbs. per sq. in.

4. Two pounds of air confined in a volume of 1 cu. ft. exerts a gauge pressure of 679.76 lbs. per square inch. What is its temperature by the centigrade and Fahrenheit scales?

The total pressure p is the gauge pressure plus the atmospheric pressure,

$$p = 679.76 + 14.70 = 694.46 \text{ lbs. per square inch.}$$

From Table II, 1 lb. of air occupies 12.39 cu. ft. under normal conditions.

$$T_1 = \frac{P_1(V_1 - \alpha c)}{P_0(V_0 - \alpha c)} T_0,$$

$$\alpha c = 2 \times 12.39 \times 0.001662 = 0.04118,$$

$$T_1 = \frac{694.46 \times (1 - 0.04118) \times 273}{14.6967 \times (24.78 - 0.04118)} = 499.98° \text{ abs.} = 226.98° \text{ C.} = 440.56° \text{ F.}$$

42. Thermodynamics of Gases.—Thermodynamics is the science which treats of the conversion of heat into work. Heat in gases is converted into work by expansion of the gases against an exterior pressure with resultant fall in temperature. A unit of heat is capable of doing a definite amount of work whether the heat is abstracted from a given quantity of gas or is obtained from other sources.

Mechanical Equivalent of Heat.—This is the work equivalent of a thermal unit. The work equivalent of one large calorie is 425 kilogram meters, or 4250 kilogram decimeters.

Digitized by Google

The work equivalent of one B.T.U. is 778 ft. lbs. In equations the mechanical equivalent of heat is represented by *E*.

Specific Heat.—The quantity of heat in thermal units which must be imparted to a unit weight of a substance in order to raise its temperature 1° of the thermometer is called the specific heat of the substance.

When heat is added to a substance it will in general produce four effects:

1. It will increase the mean velocity of the molecules and hence cause a rise in temperature. The temperature is proportional to the square of the mean velocity of the molecules.

2. It will increase the mean distance between the molecules and thus cause expansion.

3. It will increase the mean distances between the atoms in the molecules. The heat used in producing this effect is known as internal energy.

4. If the substance is a chemical compound or element containing more than one atom per molecule it may cause it to break up into its atoms or radicles and thus cause the effect known as dissociation.

If all these effects except the first could be omitted the specific heat of any substance would be constant at all temperatures but due to the 2d, 3d and 4th effects the specific heat of most substances varies considerably with the temperature. The specific heats of solids may be assumed constant if we do not approach too near their melting-points or their temperature of dissociation. Similarly the specific heats of liquids may be assumed constant if we do not approach too near their boiling, freezing or dissociation temperatures.

In determining the specific heats of gases the second effect becomes of great importance.

The specific heats of gases may be determined in two ways: We may assume the gases at a constant pressure and allow them to expand against this pressure as heat is added, thus using part of the heat to produce the second, third and fourth effects above;

Digitized by Google

or we may assume them confined in a constant volume, thus eliminating the second effect and including only the third and fourth effects.

Let c_p = the specific heat of a gas at constant pressure;

c_v = the specific heat of a gas at constant volume.

Now c_v represents the actual amount of heat in heat units used in raising the temperature of a unit weight of the gas 1° C. and in producing the third and fourth effects; c_p represents all that c_v represents plus the second effect, or the expansion against the external constant pressure. It is therefore evident that c_p is larger than c_v and the difference between them when expressed in work units is the work of expansion or the work done in overcoming the external pressure, that is,

External work of expansion

of 1 unit weight of gas for 1° C. rise in temperature $= (c_p - c_v)E$.

Both c_p and c_v may vary with the temperature, but their difference is constant for any given gas, as will be shown in the next article.

43. Determination of External Work of Expansion.—The external work of expansion may also be determined as follows:

Let p be the pressure per unit of area, and v the volume of a unit weight of gas at the pressure p.

Let s be the surface of the envelope enclosing the gas and u the travel of the surface, s, as the gas expands.

The work of expansion is evidently

$$\int psdu = \int pdv. \quad \ldots\ldots\ldots \quad (22)$$

From the characteristic equation for actual gases we have for a temperature T,

$$(v-\alpha) = \frac{RT}{p},$$

and for a temperature $T+1$,

$$(v-\alpha)_1 = \frac{R(T+1)}{p}.$$

Digitized by Google

Now if p is constant $=p'$, we have,

$$\int_T^{T+1} p'dv = p'\left[\frac{R(T+1)}{p'} - \frac{RT}{p'}\right] = R.$$

R therefore represents the external work of expansion when a unit weight of gas is raised 1° in temperature while it is expanding against a constant pressure p'. The actual value of the constant pressure p' is immaterial.

Equating the two values for external work we have

$$R = E(c_p - c_v). \quad . \quad . \quad . \quad . \quad . \quad . \quad (23)$$

44. Relation Between Heat and Work in the Expansion of Gases.—The characteristic equation of actual gases as applied to a unit weight of gas has been determined to be,

$$p(v-\alpha) = RT. \quad . \quad . \quad . \quad . \quad . \quad . \quad . \quad (14)$$

The equation contains three variables p, v and T. If we add a quantity of heat ∂q to the gas, and p remains constant during the addition, we have by differentiating this equation,

$$dT = \frac{pdv}{R},$$

and the quantity of heat communicated to the gas will be

$$\partial q = c_p dT = c_p \frac{pdv}{R}.$$

If v remains constant we have similarly,

$$\partial q = c_v \frac{(v-\alpha)dp}{R}.$$

If both p and v vary, we have for the heat added to the gas now represented by dq,

$$dq = \frac{1}{R}[c_p pdv + c_v(v-\alpha)dp]. \quad . \quad . \quad . \quad . \quad . \quad (24)$$

The total differential of equation (14) is,

$$RdT = pdv + (v-\alpha)dp. \quad . \quad . \quad . \quad . \quad . \quad . \quad . \quad (25)$$

Digitized by Google

Eliminating $(v-\alpha)dp$ between these two equations we have,

$$dq=\frac{c_p-c_v}{R}pdv+c_vdT. \quad . \quad . \quad . \quad . \quad . \quad . \quad (26)$$

The quantity pdv represents the elementary work of expansion of the gas while its volume increases by dv. The integral of pdv is therefore the total external work between the limits considered. Or representing by W the total external work we have,

$$W=\int pdv. \quad . \quad . \quad . \quad . \quad . \quad . \quad . \quad . \quad (27)$$

Representing by T_1 and by T the initial and final temperatures and integrating equation (26), we have,

$$q=\frac{c_p-c_v}{R}W+\int_{T_1}^{T}c_vdT. \quad . \quad . \quad . \quad . \quad . \quad . \quad (28)$$

Isothermal Expansion.—If we suppose that just enough heat is transmitted to the gas during expansion to keep the initial temperature constant, we have, since in that case,

$$\int_{T_1}^{T}c_vdT=0.$$

$$W=\frac{R}{c_p-c_v}q. \quad . \quad . \quad . \quad . \quad . \quad . \quad . \quad . \quad (29)$$

Since $\frac{R}{c_p-c_v}$ is constant, we see that the external work done is proportional to the quantity of heat added to the gas.

45. Adiabatic Expansion.—If we suppose that no heat, as such, is transmitted to or from the gas during expansion, the quantity q, in equation (28) becomes 0, and we have,

$$W=\frac{R}{c_p-c_v}\int_{T}^{T_1}c_vdT. \quad . \quad . \quad . \quad . \quad . \quad . \quad (30)$$

The second member of this equation can be integrated only when c_v is constant or when it is a function of T. In the following work on adiabatic expansion we will assume c_v constant. Later

Digitized by Google

in the discussion of temperature of explosion we will assume c_v a function of T.

Assuming c_v constant, we have,

$$W=\frac{Rc_v}{c_p-c_v}(T_1-T), \quad . \quad . \quad . \quad . \quad . \quad . \quad (31)$$

which shows that the external work done is proportioned to the fall in temperature.

Assuming the final temperature $T=0$, we have,

$$W=\frac{Rc_v}{c_p-c_v}T_1. \quad . \quad . \quad . \quad . \quad . \quad . \quad . \quad (32)$$

Substituting the value of RT_1 from equation (14), and placing $\frac{c_p}{c_v}=k=$ a constant when c_v is constant, we have,

$$W=\frac{1}{k-1}p(v-\alpha). \quad . \quad . \quad . \quad . \quad . \quad . \quad (33)$$

The second members of the last two equations are different expressions for the total work that could be done by a unit weight of gas if it could expand adiabatically until its temperature was reduced to 0.

The expressions may therefore be said to represent the " total energy " of the gas. The characteristic equation and the assumption of a constant value for c_v upon which these expressions are based would probably not hold for such extreme expansion, so that the expressions for total energy are inaccurate as absolute values. They may, however, be used with fair accuracy for finding the difference in total energy between gas at one pressure, volume and temperature and gas at another pressure, volume and temperature. The second of these expressions will be used later, in the chapter on interior ballistics.

46. Relation between Pressure, Volume and Temperature in Adiabatic Expansion when c_p and c_v are Constant.—If we assume adiabatic expansion, dq in equation 24, becomes 0, and we have,

$$0=c_p p dv+c_v(v-\alpha)dp. \quad . \quad . \quad . \quad . \quad . \quad (34)$$

Digitized by Google

Dividing by $c_p p(v-\alpha)$ and placing $\frac{c_p}{c_v}=k$, as above, we have,

$$k\frac{dv}{(v-\alpha)}+\frac{dp}{p}=0.$$

Integrating, $k \log_e (v-\alpha)+\log_e p=\log_e$ constant.

If p_1 and v_1 are some other values of the pressure and volume, we have,

$$(v-\alpha)^k p=(v_1-\alpha)^k p_1, \quad \ldots\ldots \quad (35)$$

or,

$$p=p_1\left(\frac{v_1-\alpha}{v-\alpha}\right)^k, \quad \ldots\ldots \quad (36)$$

which expresses the relation between pressure and volume in adiabatic expansion.

We have already shown (equation 21) for a unit weight of gas,

$$\frac{p\,(v-\alpha)}{p_1(v_1-\alpha)}=\frac{T}{T_1}$$

or,

$$\frac{v_1-\alpha}{v-\alpha}=\frac{pT_1}{p_1T},$$

and,

$$\left(\frac{v_1-\alpha}{v-\alpha}\right)^k=\left(\frac{pT_1}{p_1T}\right)^k,$$

but from above,

$$\frac{p}{p_1}=\left(\frac{v_1-\alpha}{v-\alpha}\right)^k,$$

hence,

$$\frac{p}{p_1}=\left(\frac{p}{p_1}\right)^k\left(\frac{T_1}{T}\right)^k$$

or,

$$\left(\frac{p}{p_1}\right)^{1-k}=\left(\frac{T_1}{T}\right)^k,$$

hence,

$$\frac{p}{p_1}=\left(\frac{T}{T_1}\right)^{\frac{k}{k-1}}. \quad \ldots\ldots \quad (37)$$

Digitized by Google

and,

$$p = p_1 \left(\frac{T}{T_1}\right)^{\frac{k}{k-1}}. \quad \ldots\ldots \quad (38)$$

which expresses the relation between pressure and temperature in adiabatic expansion, when c_p and c_v are constant.

PROBLEMS

1. A mass of hydrogen is expanded adiabatically from 100° C. and 5000 kilograms per sq. dec. pressure to atmospheric pressure. Taking $k = 1.404$, what is the resultant temperature?

Ans. $-150.8°$ C.

2. If an explosive mixture of hydrogen and oxygen ignites at 550° C. at what pressure would explosion take place assuming the gas to be compressed adiabatically from normal temperature and pressure? Take $k = 1.404$.

Ans. 680.33 lbs. per sq. in.

47. Application of the Laws of Adiabatic Expansion to the Gases from Explosives.—The expansion of the gases from explosives may be divided into two periods:

First Period: The expansion which takes place before all the explosive is burned.

Second Period: The expansion which takes place after all the explosive is burned.

In the first period the gases already formed are receiving heat from the burning explosive, and, for this reason, the expansion is not adiabatic.

In the second period, the gases are not receiving heat from any source and since the time of expansion in this period, although longer than that in the first period, is still very short, the heat lost to the surrounding medium is small and may usually be neglected. The expansion during the second period may therefore be assumed as following approximately the adiabatic law.

In the case of high explosives the first period is so small compared with the second period that the adiabatic laws may be considered as applying throughout the expansion.

Digitized by Google

In the case of low or progressive explosives such as gunpowder, the first period may be a large part of the total expansion considered. In this case the adiabatic laws will not apply throughout the expansion. The methods followed in this case in getting the relations between pressure and volume in expansion are given in the chapter on interior ballistics.

Temperature of Explosion and Pressure in a Closed Chamber

48. Quantity of Heat at Constant Volume.—We may now proceed with the theoretical determination of the heat given off by an explosive when the explosion takes place at a constant volume, as for instance in a closed chamber. As already stated the heat thus given off is greater than when the explosion takes place in the open air under constant pressure. The gases developed in the open air do mechanical work in pushing back the surrounding air, and this work absorbs some of the energy which would be given off as heat if the explosion were conducted in a closed chamber.

Let Q_{mp} be the heat given off by a molugram of the explosive, at constant (atmospheric) pressure at the surrounding temperature t,

Q_{mv} the heat given off by a molugram of the explosive at constant volume at the surrounding temperature t,

W, the work of expansion at constant atmospheric pressure,

E, the mechanical equivalent of heat.

Then $\frac{W}{E}$ is the heat expended in pushing back the surrounding air, and

$$Q_{mv}=Q_{mp}+\frac{W}{E}. \quad . \quad . \quad . \quad . \quad . \quad . \quad . \quad . \quad (39)$$

But the work W due to the expansion of the gases against the constant pressure p is from equation (27),

$$W=\int_{v_a}^{v_b} p\,dv = p\int_{v_a}^{v_b} dv.$$

Digitized by Google

v_b and v_a representing the volumes of the gas before and after expansion. v_b is equal to the volume actually occupied before expansion by that part of the explosive which is converted into gas.

Integrating, we have,

$$W = p(v_a - v_b). \quad . \quad . \quad . \quad . \quad . \quad . \quad . \quad . \quad (40)$$

Taking the molecular volume at 0° and 760 millimeters, 22.32 liters, as the unit volume, let n_b represent the number of unit volumes before expansion, n_1 the number of unit volumes after expansion to normal atmospheric conditions; n_2 will also represent the number of gaseous molugrams in the reaction, since after expansion to the normal atmospheric conditions of temperature and pressure each unit volume is occupied by a molugram.

Then from Gay-Lussac's law, we have at the temperature t

$$v_a = 22.32 n_a(1 + at),$$

$$v_b = 22.32 n_b$$

Substituting these values in equation (40) we have,

$$W = p22.32(n_a - n_b + n_a at),$$

Whence

$$\frac{W}{E} = \frac{p}{E} 22.32(n_a - n_b + n_a at). \quad . \quad . \quad . \quad . \quad (41)$$

Expressing W in kilogram-decimeters we have as the value of E, 4250 kilogram-decimeters and as the value of p, the normal atmospheric pressure 103.33 kilograms per square decimeter.

Equation (41) therefore then becomes,

$$\frac{W}{E} = \frac{103.3 \times 22.32}{4250}(n_a - n_b + n_a at),$$

or,

$$\frac{W}{E} = 0.5424(n_a - n_b + n_a at),$$

since

$$a = \tfrac{1}{273}, \text{ and } \tfrac{1}{273} \times 0.5424 = 0.002,$$

nearly, we have,

$$\frac{W}{E} = 0.5424(n_a - n_b) + .002 n_a t. \quad . \quad . \quad . \quad . \quad . \quad (42)$$

Digitized by Google

In the case of explosives the volume v_b is generally negligible with respect to v_a. v_b represents the volume of the solid explosive for those explosives that are completely converted into gas. n_b is therefore negligible with respect to n_a, and equation (42) becomes

$$\frac{W}{E}=0.5424n_a+0.002n_at$$

Substituting this value in equation (39)

$$Q_{mv}=Q_{mp}+0.5424n_a+0.002n_at$$

We will make $t=15°$, since the heats of formation in Table V have been determined for that temperature, and Q_{mp} and Q_{mv} in the above equation will be determined from the table. We have, then, finally,

$$Q_{mv}=Q_{mp}+0.5724n_a \quad . \quad . \quad . \quad . \quad . \quad . \quad (43)$$

for the quantity of heat given off at constant volume by the molugram of the explosive.

EXAMPLE 3.—Take, for example, nitroglycerine,

$$\underset{454}{2C_3H_5(NO_2)_3O_3}=\underset{264}{6CO_2}+\underset{90}{5H_2O}+\underset{84}{3N_2}+\underset{16}{\tfrac{1}{2}O_2}$$

We have found at constant pressure,

$$Q_{mp}=330.7 \text{ large calories.}$$

From the reaction we see that 2 molugrams of the explosive give off $6+5+3+0.5=14.5$ molecular volumes of gas. 1 molugram, therefore, gives

$$n_a=7.25 \text{ volumes}$$

Substituting in equation (43) we obtain

$$Q_{mv}=330.7+0.5724\times 7.25=334.8 \text{ large calories}$$

For 1 kilogram of the explosive,

$$Q_{kv}=\frac{334.8}{227}\times 1000=1474.9 \text{ large calories.}$$

We found at constant pressure

$$Q_{kp}=1456.8 \text{ large calories.}$$

Digitized by Google

49. Potential.—The potential of an explosive is the total work that can be performed by the resulting gas when expanded adiabatically until its pressure is reduced to atmospheric pressure and its temperature to that of the surrounding air or 15° C. The potential is therefore the heat given off at constant volume when expressed in work units. Using the kilogram as the unit of weight and the meter as the unit of length, the kilogram-meter is the unit of work. The mechanical equivalent of heat is 425 kilogram-meters or 4250 kilogram decimeters.

Representing the potential, the capacity of one kilogram of the explosive for doing work, by W_k we have,

$$W_k = Q_{kv} \times 425 \text{ kilogram-meters} = 4250 Q_{kv} \text{ kilo-dec.} \quad (44)$$

Volume of Gas.—The volume of gases produced by explosion may be measured experimentally by drawing them from the calorimetric bomb for this purpose. The volume of gases may also be determined theoretically from the reaction when that is known.

The molecular volume of all gases at the standard pressure and temperature being 22.32 liters, it is seen that to obtain the volume of gases produced at the standard pressure and temperature it is only necessary to multiply the number of molugrams of gas produced in the reaction by 22.32.

EXAMPLE 4.—A formula for the explosion of black gunpowder is

$$\underset{1010}{10KNO_3} + \underset{96}{3S} + \underset{96}{8C} = \underset{522}{3K_2SO_4} + \underset{276}{2K_2CO_3} + \underset{264}{6CO_2} + \underset{140}{5N_2}$$

The first two products of the reaction are solid. The gaseous products are 6 molecules of CO_2 and 5 of N_2. Therefore the molecular volume of the gases from 1202 grams of the explosive is, at 0° and 760 mm,

$$V_m = 11 \times 22.32 = 245.52 \text{ liters,}$$

and from 1 kilogram of explosive

$$V_k = \frac{245.52 \times 1000}{1202} = 204.26 \text{ liters.}$$

Digitized by Google

The volumes at any other pressure or temperature may be obtained by means of equation (21).

50. **Temperature of Explosion.**—The method of Mallard and Le Chatelier for calculating the temperature of explosion at constant volume as in a closed vessel is as follows.

The quantity of heat liberated by the explosion of a molugram of the explosive would, if the specific heat of the products were constant, be equal to the molecular specific heat multiplied by *the rise in temperature*. We would then have

$$Q_{mv}=C_{mv}\times t_1, \quad \ldots\ldots\ldots \quad (45)$$

from which t_1, the rise in temperature, could be obtained. Assuming 15°, an ordinary temperature, as the temperature of the explosive when fired, the temperature of explosion would then be

$$t=t_1+15. \quad \ldots\ldots\ldots \quad (46)$$

But it is known that the specific heat increases with the temperature. Assuming that the specific heat varies with the temperature in the manner represented by the linear expression

$$C_{mv}=a+bt, \quad \ldots\ldots\ldots \quad (47)$$

and letting C_{mv} now represent the mean molecular heat at constant volume between 0° and t°, the values of a and b, and the consequent values of C_{mv}, have been deduced for certain gases as follows. The values are given in *small calories*.

	a	b	
For CO_2, SO_2, etc.....	6.26	0.0037	$C_{mv}=6.26+0.0037t$
For H_2O.....	5.61	0.0033	$C_{mv}=5.61+0.0033t$
For gases without condensation.....	4.80	0.0006	$C_{mv}=4.80+0.0006t$

The values of a are the molecular heats of the gases in small calories at zero temperature, and the values of b are the increments of the mean molecular heats for each degree of rise in temperature.

Digitized by Google

Suppose that the products of an explosion are as follows:

$$\alpha CO_2 + \beta H_2O + \delta P,$$

P representing a molecule of a perfect gas. The coefficients a and b for the products of explosion will then be

$$a = 6.26\alpha + 5.61\beta + 4.8\delta, \quad \ldots\ldots \quad (48)$$

$$b = 0.0037\alpha + 0.0033\beta + 0.0006\delta. \quad \ldots\ldots \quad (49)$$

The values of Q_{mv} are based on experimental results in which the gases were cooled to 15° C. Since equation (47) assumes t measured from 0°, it is necessary to add to Q_{mv} the amount of heat which would have been obtained if the gases had been cooled to 0°. This amount is gotten by multiplying the mean specific heat between 0° and 15° ($C'_{mv} = a + 15b$) by 15° and we have for the total heat which would have been obtained if the gases had been cooled to 0°

$$1000Q_{mv} + 15(a + 15b).$$

Q_{mv} has been determined in large calories and is multiplied by 1000 in order to get it in the same terms as a and b, that is, in small calories.

The heat which would have been obtained if the gases had been cooled from t° to 0° is also given by the expression $C_{mv} \times t = (a + bt)t$, the product of the temperature by the mean specific heat from 0° to t°. Equating the two values of the total heat we obtain

$$(a + bt)t = 1000Q_{mv} + 15(a + 15b) \quad \ldots\ldots \quad (50)$$

Solving for t we obtain

$$t = \frac{\sqrt{4000bQ_{mv} + (a + 30b)^2} - a}{2b}. \quad \ldots\ldots \quad (51)$$

EXAMPLE 5.—Nitroglycerine. $Q_{mv} = 334.8$ large calories. (See example 3.)

$$\underset{454}{2C_3H_5(NO_2)_3O_3} = \underset{264}{6CO_2} + \underset{90}{5H_2O} + \underset{84}{3N_2} + \underset{16}{0.5O_2}.$$

Digitized by Google

Since the products, as given in the formula, are from two molecules of the explosive,

$$2a = 6.26\times6+5.61\times5+4.8\times3+4.8\times0.5 = 82.41$$
$$2b = 0.0037\times6+0.0033\times5+0.0006\times(3+0.5) = 0.0408$$
$$a = 41.205 \qquad b = 0.0204$$

and from equation (51)

$$t = \frac{\sqrt{(4000\times0.0204\times334.8)+(41.205+30\times0.0204)^2}-41.205}{2\times0.0204}$$
$$= 3169^\circ \text{ C.}$$

51. Temperature When Solid Products are Formed.—If the explosion gives rise to solid products the heat absorbed in raising the temperature of these products must be considered. In equation (47) C_{mv} must be the mean specific heat of the products of the explosion of a molugram of the explosive.

Suppose that in addition to the gaseous products assumed above, we have x molugrams of a solid product having a molecular specific heat h. Then a, equation (48), becomes

$$a = 6.26\alpha+5.61\beta+4.8\delta+hx, \quad \ldots \quad (52)$$

The specific heat of a solid product is assumed not to vary with the temperature, therefore the value of b as given by equation (49) is not affected.

EXAMPLE 6.—Determine the temperature of explosion of the mixture of mononitrobenzene and potassium chlorate of example **2.**

The reaction is

$$\underset{1266.8}{2C_6H_5NO_2}+\tfrac{2}{3}^5KClO_3 = \underset{528}{12CO_2}+\underset{90}{5H_2O}+\underset{28}{N_2}+\tfrac{2}{3}^5\underset{620.8}{KCl}$$

From example 2, $Q_{mp} = 1506.2$ large calorie

equation (43), $Q_{mv} = Q_{mp}+0.5724n_a$

$n_a = 12+5+1 = 18$

$Q_{mv} = 1516.5$

Digitized by Google

The molecular specific heat of KCl, 12.89
equation (48), $a = 6.26 \times 12 + 5.61 \times 5 + 4.8 + 12.89 \times 25/3 = 215.39$
equation (49), $b = 0.0037 \times 12 + 0.0033 \times 5 + 0.0006 = 0.0615$

$$t = \frac{\sqrt{(4000 \times 0.0615 \times 1516.5) + (215.39 + 30 \times 0.0615)^2} - 215.39}{2 \times 0.0615}$$

$$= 3519^\circ \text{ C.}$$

PROBLEMS

1. How many small calories are required to raise 17.03 grams of ammonia at constant volume from 0° to 100° C.?

17.03 grams of ammonia is one molugram.

Mean molecular specific heat from 0° to 100° is 6.75 small calories.

Heat required $= 6.75 \times 100 = 675$ small calories.

2. How much heat is required to raise 125 grams of carbon dioxide at constant volume from 0° to 150° C.?

Mean molecular specific heat $= 6.26 + 0.0037 \times 150 = 6.815$.

Heat required $= 125 \times \frac{6.815}{44} \times 150 = 2904$ small calories.

3. How much additional heat would be required to raise the above amount of gas from 150° to 300° C.?

Mean molecular specific heat 0°–300° = 7.37.

Heat required to raise gas from 0° to 300° $= 125 \times \frac{7.37}{44} \times 300$

$= 6281.4$ small calories.

Heat required to raise gas from 0° to 150° $= 2904.0$ " "

Heat required to raise gas from 150° to 300° $= 3377.4$ " "

4. What quantity of heat would be given off by 500 grams of carbon monoxide in cooling from 595° C. to 300° C.?

Ans. 56.23 small calories.

5. What is the temperature of explosion of the explosive gelatine the reaction equation of which is given in problem 2, par. 35? Ans. 3089° C.

52. Density of Explosives.—The density or specific gravity of an explosive, like that of any other substance, is its weight compared with the weight of an equal volume of water.

In the case of explosives heavier than water and not acted upon by it, as smokeless powder, the density may be calculated by weigh-

Digitized by Google

ing a sample in air and again when suspended in water. In the case of explosives which partly dissolve in water, but are not acted upon by mercury, as black powder, a special instrument known as the " mercury densimeter " is used for the determination of density. This instrument determines the weight of the explosive compared with that of an equal volume of mercury whose density is known.

In the case of an explosive that is in a plastic or in a fine crystalline condition, as is the case with most high explosives, the density may be determined by pressing it into a vessel of known volume and weighing the amount contained. In this case the determined density will depend somewhat upon the degree of compression used.

Letting δ = the density, we have,

$$\delta = \frac{\text{Wt. of explosive}}{\text{Wt. of volume of water equal to that of solid explosive}}.$$

In French units if,

c = the weight of explosive in kilograms,

and V_s = the volume of the solid explosive in cu. dec. we have, since 1 kilogram of water occupies 1 cubic decimeter,

$$\delta = \frac{c}{V_s} \quad . \quad . \quad . \quad . \quad . \quad . \quad . \quad (53)$$

In English units if c is given in pounds and V_s in cubic inches, we have, since 1 lb. of water occupies 27.68 cu. ins.,

$$\delta = \frac{27.68c}{V_s} \quad . \quad . \quad . \quad . \quad . \quad . \quad . \quad (54)$$

53. Gravimetric Density.—Some explosives, like black and smokeless gunpowders, being in granulated form, occupy more space than the volume of the solid explosive. If in explosives of this kind we determine the density by comparing the weight of the explosive with the weight of water that will fill the volume

Digitized by Google

actually occupied by the explosive, including the spaces between the grains, we obtain what is known as the gravimetric density.

Letting

γ = gravimetric density,

we have

$$\gamma = \frac{\text{Weight of explosive}}{\left\{\begin{array}{l}\text{Weight of volume of water equal to that actually}\\ \text{occupied by explosive.}\end{array}\right.}$$

In French units, if

c = weight of explosive in kilograms.

V_a = volume actually occupied by explosive.

We have,

$$\gamma = \frac{c}{V_a} \quad . \quad . \quad . \quad . \quad . \quad . \quad . \quad . \quad . \quad (55)$$

In English units, if c is given in pounds and V_a in cubic inches.

$$\gamma = \frac{27.68c}{V_a} \quad . \quad . \quad . \quad . \quad . \quad . \quad . \quad . \quad . \quad (56)$$

54. Density of Loading.—Just as in determining the gravimetric density we compared the weight of powder with the weight of water that would fill the total space occupied by the powder, we may compare the weight of powder with the weight of water that would fill the entire powder chamber in which the powder is loaded.

The density thus determined, known as the density of loading, is of importance in comparing the pressures developed by explosives. Letting

Δ = the density of loading;

c = the weight of explosive;

C = the volume of the chamber.

We have, as before, in French units,

$$\Delta = \frac{c}{C} \quad . \quad . \quad . \quad . \quad . \quad . \quad . \quad . \quad . \quad (57)$$

In English units,

$$\Delta = \frac{27.68c}{C} \quad . \quad . \quad . \quad . \quad . \quad . \quad . \quad . \quad (58)$$

Digitized by Google

The accompanying figure will serve to illustrate the difference between density, gravimetric density, and density of loading. The figure represents a section of a chamber charged with powder to the line A. The *density of loading* is in this case the weight of powder below the line A divided by the weight of water that will fill the *whole* chamber. The *gravimetric density* is the weight of the powder divided by the weight of water that will fill all that part of the chamber below the line A. Now considering the powder charge as compressed into a solid mass at the bottom of the chamber, represented by the black portion, the *density* of the powder will be its weight divided by the weight of water that will fill this black portion.

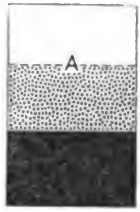

FIG. 21.—Illustrating the Difference between Density, Gravimetric Density and Density of Loading.

PROBLEMS

1. The volume of the chamber of the 3-in. field gun is 66.5 cu. in. The weight of the charge is 26 oz. Density of the powder 1.56. What is the density of loading? Ans. $\Delta = 0.6764$.

2. If the gravimetric density of the powder in the last example is unity, how many pounds will the chamber hold? 2.4 lbs.

3. The 5-in. siege gun has a chamber capacity of 402.5 cu. in. What is the density of loading with a charge of 5.37 lbs.? $\Delta = 0.3693$.

4. The 4-in. gun when loaded with 12 lbs. of sphero-hexagonal powder has a density of loading of 0.915. What is the chamber capacity? $C = 363$ cu. in.

5. The 12-in. gun has a chamber capacity of 17487 cu. in. The density of loading is 0.5936. What is the weight of the charge, and what is the volume of the solid powder in the charge? $\delta = 1.56$. $c = 375$ lbs. Solid volume = 6654 cu. in.

55. Pressure in a Closed Chamber.—The pressure of the gases produced by an explosion is a function of the volume occupied by the gases at the temperature of explosion. In a closed chamber in determining the volume actually occupied by the gases we must subtract from the volume of the chamber, the volume of the solid

Digitized by Google

products formed as well as the co-volume of the gases. Pressures are measured practically by means of pressure gauges described in Chapter III, and the actual measured pressures thus determined form a check on the theoretical calculation of pressure which follows.

Let V be the volume of the closed chamber in cubic decimeters.
P the pressure developed in kilograms per square decimeter.
c the weight of the charge in kilograms.
c' the weight of the solid products formed, in kilograms.
α the co-volume of the gases from 1 kilogram of explosive.
α' the volume of the solid products from 1 kilogram of the explosive.

Applying the characteristic equation of gases (14) which we have assumed, we then have for a weight c of explosive, or $c-c'$ of gas, placing $R=E(c_p-c_v)$.

$$P[V-c(\alpha+\alpha')]=(c-c')E(c_p-c_v)T. \quad . \quad . \quad . \quad (59)$$

The difference of the specific heats c_p-c_v, while assumed constant in this equation for any one gas, varies for different gases. Since gases from explosives are mixtures of different gases the value of c_p-c_v will depend upon the relative weights of the various gases formed.

However, the molecular heats (specific heats multiplied by molecular weights) of all gases are nearly the same and, if we represent by n_{at} the number of molecular volumes of gas formed from each kilogram of explosive, we have for the mean molecular weight of the mixture the total weight of gas divided by the number of molecular volumes formed, or $\frac{c-c'}{cn_{at}}$.

The molecular heats are therefore,

$$C_{mp}=c_p\frac{c-c'}{cn_{at}}$$

$$C_{mv}=c_v\frac{c-c'}{cn_{at}}$$

Digitized by Google

from which we obtain,

$$(c-c')(c_p-c_v)=(C_{mp}-C_{mv})cn_{ak}.$$

Substituting this value in equation (59) we obtain,

$$P[V-c(\alpha+\alpha')]=E(C_{mp}-C_{mv})n_{ak}cT.$$

Solving for P

$$P=\frac{E(C_{mp}-C_{mv})n_{ak}cT}{V-c(\alpha+\alpha^1)}.$$

Dividing both terms of the second member by V, and placing $\frac{c}{V}=\Delta=$density of loading,

$$P=\frac{E(C_{mp}-C_{mv})n_{ak}T\Delta}{1-(\alpha+\alpha^1)\Delta}. \quad . \quad . \quad . \quad . \quad . \quad (60)$$

In this formula E is taken as 4250 kilograms-decimeters.

The table at the end of the book gives the values of C_{mp} and C_{mv} for gases. For gases resulting from explosives the value $C_{mp}-C_{mv}$ may be taken as .001985 large calories.

Making these substitutions the formula becomes,

$$P=\frac{8.436n_{ak}T\Delta}{1-(\alpha+\alpha')\Delta} \quad . \quad . \quad . \quad . \quad . \quad . \quad (61)$$

Placing

$$f=8.436n_{ak}T, \quad . \quad . \quad . \quad . \quad . \quad . \quad . \quad . \quad (62)$$

we obtain

$$P=\frac{f\Delta}{1-(\alpha+\alpha')\Delta}. \quad . \quad . \quad . \quad . \quad . \quad . \quad (63)$$

When

$$\Delta=1-(\alpha+\alpha')\Delta,$$

or

$$\Delta=\frac{1}{1+\alpha+\alpha'}=\frac{c}{V}$$

P becomes equal to f.

The value f, also known as the " force " of the powder, is therefore the pressure developed when 1 kilogram of the explosive is exploded in a volume of 1 cubic decimeter plus the co-volume of the gases plus the solid residue from 1 kilogram.

Digitized by Google

EXAMPLE 7.—Find the pressure produced in a closed chamber by a mixture of mononitrobenzene and potassium chlorate the reaction of which is given below, when the density of loading is .9, and when it is 1.0.

Molecular Weights $1266.8 = 528 + 90 + 28 + 620.8$.

$$2C_6H_5NO_2 + \tfrac{2}{3}^5 KClO_3 = 12CO_2 + 5H_2O + N_2 + \tfrac{2}{3}^5 KCl.$$

Volumes of Gases $12 + 5 + 1 = 18$.

From previous calculations, examples 2 and 21,

$$T = 3792°$$

$$n_{ak} = 18 \times \frac{1000}{1266.8} = 14.21$$

$$\alpha = \frac{V_k}{1000} = \frac{18 \times 22.32 \times 1000}{1000 \times 1266.8} = .3172$$

$$\alpha^1 = \frac{620.8}{1266.8} \times 1.995 = .2456.$$

The value 1.995 is the density of KCl taken from Table V. Hence we have Equation (62).

$$f = 8.436 \times 14.21 \times 3792 = 454{,}570 \text{ kgs. per sq. dec.}$$

For

$$\Delta = .9$$

$$P = \frac{454{,}570 \times .9}{1 - .5628 \times .9}$$

$$P = 829{,}030 \text{ kgs. per sq. dec.}$$

and for

$$\Delta = 1.$$

$$P = \frac{454{,}570 \times 1}{1 - .5628 \times 1}$$

$$P = 1{,}039{,}700 \text{ kgs. per sq. dec.}$$

Digitized by Google

EXAMPLE 8. *Complete Calculation of the Effects of Explosion.*— The formula of the reaction for the complete combustion of Sprengel's explosive acid, a mixture of picric acid and nitric acid, is as follows:

$$\overset{1145}{5C_6H_2(NO_2)_3OH} + \overset{819}{13HNO_3} = \overset{1320}{30CO_2} + \overset{252}{14H_2O} + \overset{392}{14N_2}$$

The molecular weight is $1145+819=1964$.

In the work that follows, the number of the article in which the process is explained, or the number of the equation from which the value is derived, appears on the left.

35, $Q_{mp}=(30\times 94.3+14\times 58.3)-(5\times 46.8+13\times 41.6)$
$=2870.4$ large calories

35, $Q_{kp}=2870.4\times\frac{1000}{1964}=1461.5$ large calories

(43) $Q_{mv}=2870.4+0.5724(30+14+14)=2903.6$ large calories

48, $Q_{kv}=2903.6\times\frac{1000}{1964}=1478.4$ large calories

(44) $W_k=1478.4\times 425=628{,}320$ kgm.

49, $V_m=(30+14+14)22.32=1294.56$ liters

49, $V_k=1294.56\times\frac{1000}{1964}=659.14$ liters

(48) $a=6.26\times 30+5.61\times 14+4.8\times 14=333.54$

(49) $b=0.0037\times 30+0.0033\times 14+0.0006\times 14=0.1656$

(51) $$t=\frac{\sqrt{(4000\times 0.1656\times 2903.6)+(333.54+30\times 0.1656)^2}-333.54}{2\times 0.1656}$$
$=3303^\circ$ C.

55, $n_{ak}=(30+14+14)\frac{1000}{1964}=29.532$

Digitized by Google

(62) $f = 8.436 \times 29.532 \times 3573 = 890140$ kg. per square decimeter

40, $\alpha = \frac{659.14}{1000} = .65914$

55. $\alpha' = 0$

(63) $P = \frac{890140\Delta}{1 - 0.65914\Delta}$

For $\Delta = 0.8$

$P = 1{,}506{,}500$ kgs. per square decimeter.

Digitized by Google

CHAPTER III

MEASUREMENT OF VELOCITIES AND PRESSURES

56. Le Boulengé Chronograph.—In measuring the velocity of a projectile the time of passage of the projectile between two points a known distance apart is recorded by means of a suitable instrument. The calculated velocity is the mean velocity between the two points, and is considered as the velocity midway between the points. In order that this may be done without material error, the two points must be selected at such a distance apart in the path of the projectile that the motion of the projectile between the points may be considered as uniformly varying, and the path a right line.

The instrument generally employed for measuring the time interval in the determination of velocity was invented by Captain Le Boulengé of the Belgian Artillery, and is called the Le Boulengé Chronograph. It has been modified and improved by Captain Bréger of the French Artillery. The brass column, *a* Fig. 22, supporting two electromagnets, *b* and *c*, is mounted on the triangular bedplate *d* which is provided with levels and leveling screws. The magnet *b* supports the long rod *e*, called the *chronometer*, which is enveloped when in use by a zinc or copper tube *f*, called the *recorder*. A nut above the recorder, shown in Fig. 28, holds the recorder fixed in place on the chronometer rod. The magnet *c* which supports the short rod *g*, called the *registrar*, is mounted on a frame which permits it to be moved vertically along the standard. Fastened to the base of the standard is the flat steel spring *h* which carries at its outer end the square knife *i*. The knife is held retracted or cocked by the trigger *j* which is acted upon by the spring *k*. The chronometer *e* hangs so that one element of the enveloping tube or recorder is close to the knife. When the knife is released by pressure on the trigger it flies out under the action of the spring *h* and indents

Digitized by Google

the recorder. The registrar *g* hangs immediately over the trigger. When the electric circuit through the registrar magnet is broken the registrar falls on the trigger and releases the knife. The tube *l* supports the registrar after it has fallen through it. Adjustable guides are provided to limit the swing of the two rods when first suspended. The stand or table on which the instrument is mounted is provided with a pocket which receives the chronometer when it falls, at the breaking of the circuit that actuates its magnet. A quantity of beans in the bottom of the pocket arrests the fall of the chronometer without shock.

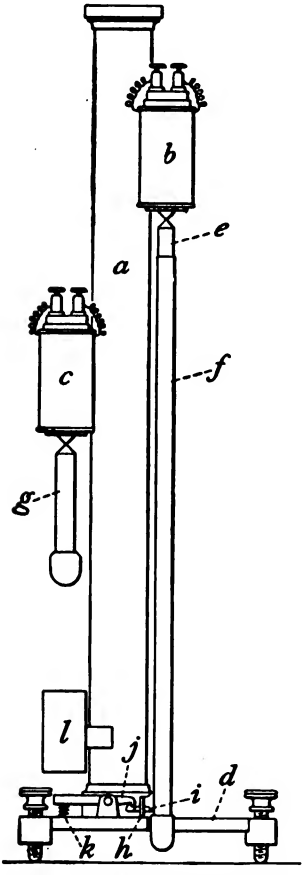

FIG. 22.—Le Boulengé Chronograph.

In the use of the chronograph in measuring the velocity of a shot the following accessory apparatus is required: Targets, rheostats, disjunctors, and measuring rule.

Targets.—Two wire targets, each made of a continuous wire, Fig. 23, are erected in the path of the projectile. The targets form parts of electric circuits which include the electromagnets of the chronograph. Each magnet has its own target and its own circuit independent of the other. The circuit from the nearer or first target includes the chronometer magnet; the circuit from the second target includes the registrar magnet. On the passage of the projectile through the first target the circuit is broken, the chronometer magnet

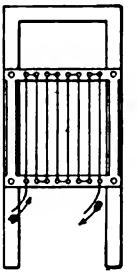
FIG. 23.—Target.

Digitized by Google

demagnetized, and the long rod, or chronometer, falls. When the projectile breaks the circuit through the second target the short rod, or registrar, falls and, striking the trigger, releases the knife, which flies out and marks the recorder at the point which has been brought opposite the knife by the fall of the chronometer.

In some instruments the chronometer circuit is led through a contact piece not shown, carried by the spring *h*, and so arranged that the chronometer circuit cannot be closed until the knife is cocked. This arrangement prevents the loss of a record through failure to cock the knife when suspending the rods before the piece is fired.

The first target must always be erected at such a distance from the gun that it will not be affected by the blast. For small arms it is placed three feet from the muzzle and consists of a single fine copper wire stretched across the path of the bullet. For cannon it is placed from 50 to 150 feet from the muzzle, depending upon the size of the gun. For the measurement of ordinary velocities the targets are usually placed 150 feet apart.

The second target for small arms consists of a steel plate to stop the bullets, having mounted on its rear face, and insulated from it by the block *w*, Fig. 24, a contact spring *s*, contact pin *p*, and their binding screws. When the bullet strikes the plate the shock causes the end of the spring to leave the pin, and thus breaks the circuit, which is immediately re-established by the reaction of the spring. By means of this device constant repairing of the target is avoided.

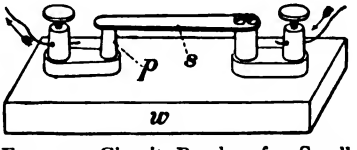

FIG. 24.—Circuit Breaker for Small Arms.

57. The Rheostat.—Both circuits are led independently through rheostats, by means of which the resistance in the circuits may be regulated, and the strength of the currents through the two magnets equalized. One form of rheostat is shown in Fig. 25. The current passes through the contact spring *a* and through a German

Digitized by Google

silver wire wound in grooves on the wooden drum *b*. By turning the thumb nut *c* the contact spring is shifted, and more or less of the wire is included in the circuit.

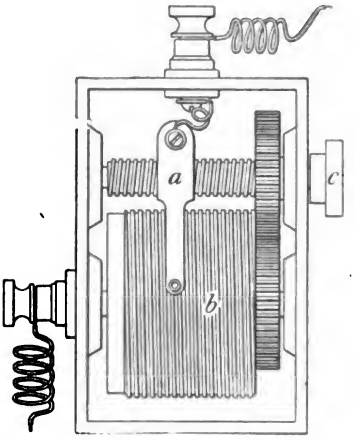

FIG. 25.—Wire and Drum Rheostat.

Another form of rheostat, through which both circuits pass independently, is shown in Fig. 26. Each current passes through a strip of graphite, *a*, and the resistance in the circuit may be increased or diminished by sliding the contact piece *b* so as to include a greater or less length of the graphite strip in the circuit.

The Disjunctor.—Both circuits also pass independently through an instrument called the disjunctor, by means of which they may be broken simultaneously. The disjunctor is shown in elevation

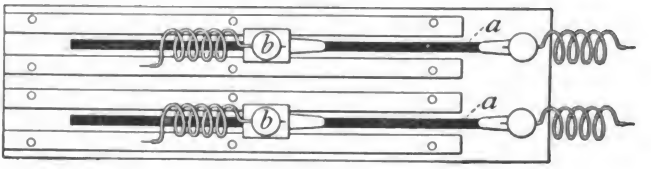

FIG. 26.—Graphite Strip Rheostat.

and part section in Fig. 27. The two halves of the instrument are exactly similar. The two contact springs *c*, weighted at their free ends, bear against insulated contact pins *e*, supported in the same metal frame *d*. The frame is pressed upward against the spring catch *h* by two other contact springs, *f*. The electric circuit passes from one binding post through the parts *f*, *e*, *c*, and *a*, to the other binding post.

On the release of the spring catch *h* the frame *d* flies upward

Digitized by Google

under the action of the springs *f* until stopped by the pin *g*. At the sudden stoppage of the movement the weighted ends of the contact springs simultaneously leave the contact pins, thus breaking both circuits momentarily. Mounted on a shaft are two hard rubber cams, *b*, which bear against other springs, *a*, in the two circuits. On turning the cam shaft the connection between the parts *a* and *c* is broken, breaking both electric circuits, but not necessarily simultaneously. The circuits are habitually broken in this manner except when taking disjunction or records in firing.

58. Disjunction.—By means of the disjunctor both circuits are

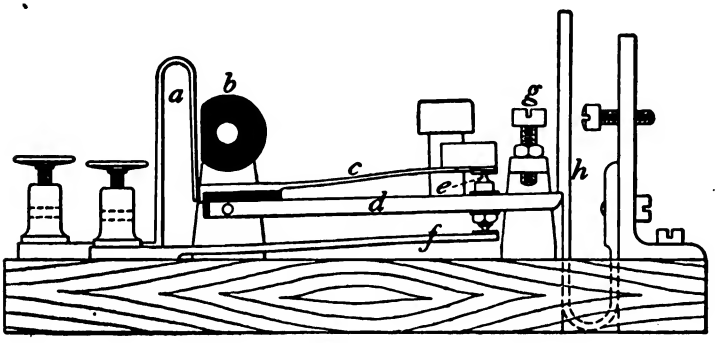

FIG. 27.—Disjunctor.

broken at the same instant. The mark made by the knife under these circumstances is called the disjunction mark, and its height above a zero mark made by the knife when the chronometer is suspended from its magnet is evidently the height through which a free falling body moves in the time used by the instrument in making a record. This time includes any difference in the times required for demagnetization of the two magnets, the time occupied by the registrar in falling, and the time required for the knife to act.

From the height as measured we obtain the corresponding time from the law of falling bodies,

$$t = (2h/g)^{\frac{1}{2}}.$$

Digitized by Google

Now when the circuits are broken by the projectile the chronometer begins to fall before the registrar. The mark made by the knife will, therefore, be found above the disjunction mark. If we measure the height of this second mark above the zero, the corresponding time is the whole time that the chronometer was falling before the mark was made, and to obtain the time between the breaking of the circuits we must subtract from this time the time used by the instrument in making a record, or the time corresponding to the disjunction. Let h_1 and h_2 represent the heights of the disjunction and record marks respectively, t_1 and t_2 the corresponding times. Let t be the time between the breaking of screens, then

$$t = t_2 - t_1 = (2h_2/g)^{\frac{1}{2}} - 2h_1/g)^{\frac{1}{2}}.$$

It will be seen by the equation that *the difference of the times, and not the difference of the heights, must be taken.*

Fixed Disjunction.—For the velocity at the middle point between targets we have, representing by s the distance between the targets,

$$v = s/t.$$

Substituting for t its value, we have

$$v = \frac{s}{(2h_2/g)^{\frac{1}{2}} - (2h_1/g)^{\frac{1}{2}}}.$$

From this equation we see that if the value of s, and of $(2h_1/g)^{\frac{1}{2}}$, the disjunction, be fixed, the values of v can be calculated for all values of h_2 within the limits of practice, and tabulated. This has been done for the values $s = 100$ ft. and $(2h_1/g)^{\frac{1}{2}} = 0.15$ seconds. This value of $(2h_1/g)^{\frac{1}{2}}$ is called *the fixed disjunction.* If such a table is not at hand, the fixed value of the disjunction avoids the labor of calculating $(2h_1/g)^{\frac{1}{2}}$ for each shot.

In this case

$$t = t_2 - 0.15 \text{ sec.} = (2h_2/g)^{\frac{1}{2}} - 0.15.$$

In ordinary practice it is better to take the disjunction at each shot, and to keep the disjunction mark near the disjunction circle,

Digitized by Google

but not necessarily on it. The times corresponding to the heights of the disjunction and record marks are both read from the table, and with the difference of these times the velocity is taken from another table.

Measuring Rule.—For measuring the height of the mark on the recorder above the zero mark there is provided with the instrument a rule graduated in mi limeters, and with a sliding index and vernier, the least reading being $\frac{1}{10}$ of a millimeter. The swiveled pin at the end of the rule, Fig. 28, is inserted in the hole through the bob of the chronometer, and the knife edge. of the index is placed at the lower edge of the mark whose height is to be measured. The height is then read from the scale. Tables are constructed from which can be directly read the time corresponding to any height in millimeters within the limits of the scale. The maximum time that can be measured with this chronograph is limited by the length of the chronometer rod, and is about 0.15 of a second.

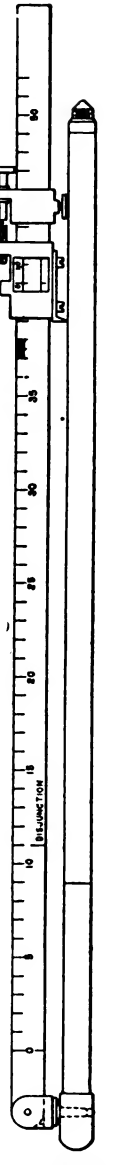

FIG. 28.—Measuring Rule.

59. Adjustments and Use.—The instrument must be properly mounted on a stand at such a distance from the gun that it will not be affected by the shock of discharge. The electrical connections with the batteries and targets, through the rheostats *r* and disjunctor *d*, are made, as shown in Fig. 29.

To adjust the instrument, first level it by the leveling screws, cock the knife, and suspend the chronometer rod, enveloped by the recorder, from its magnet. See that the recorder hangs close to the knife and that no part of the base of the rod touches any part of the instrument. The guides must be close to, but not touching, the bob of the chronometer. Depress the trigger. The knife will mark the recorder near the bottom. This mark

Digitized by Google

is the zero from which all heights are measured, and the knife edge on the measuring rule index must be so adjusted that the zero of the vernier shall coincide with the zero of the scale when the knife edge is in the mark. The adjustment of the knife is made as follows. Place the sliding index so that the zero of the vernier is at the zero of the scale on the rule. Clamp the index and apply the rule to the chronometer. Loosen the screws that hold the knife and adjust the knife edge to the zero mark on the recorder. Tighten the knife screws. After this adjust-

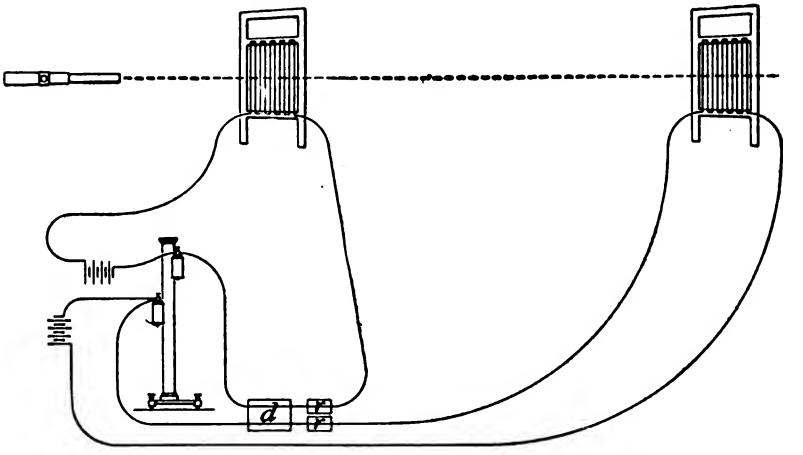

FIG. 29.—Electrical Connections of Instruments and Targets.

ment, slide the index to the mark *Disjunction* on the rule, and letting the knife edge bear against the recorder, turn the recorder around the chronometer rod. The knife edge will scribe a circle on the recorder, and the mark made at disjunction should fall on or near this circle.

To regulate the strength of the magnets each of the rods is provided with a tubular weight, one-tenth that of the rod. Place the proper weight on each rod and suspend the rods from their magnets. Increase the resistance in each circuit by slowly moving the contact piece of the rheostat until the rod falls. Remove the weights from the rods and again suspend the rods. Take the disjunction. If

Digitized by Google

the bottom of the mark made by the knife does not lie on or near the circle previously scribed on the recorder, raise or lower the registrar magnet until coincidence is nearly obtained.

Test the disjunctor by shifting the two circuits. The height of disjunction should remain the same.

Test the circuits by suspending the rods and causing the circuits to be broken successivly at the two targets. Note that the proper rod falls as each circuit is broken.

Always suspend the chronometer rod with the same side of the bob to the front, and always, before suspending it, press the recorder hard against the bob. After each record turn the recorder slightly on the rod to present a new element to the knife.

Circuits should always be broken at the disjunctor when the rods are not actually suspended, and the rods should be allowed to remain suspended as short a time as possible.

Measurement of Very Small Intervals of Time.—For the measurement of very small time intervals the registrar magnet is raised to near the top of the standard and placed in the circuit with the first target. The chronometer magnet is put in the circuit with the second target. Under this arrangement the disjunction mark will be made near the top of the recorder and the record mark under the disjunction. The interval of time measured is obtained by subtracting the time corresponding to the height of the record mark, from the time of disjunction. The object of raising the registrar magnet is to obtain the record when the chronometer has acquired a considerable velocity of fall, so that the scale of time will be extended, and small errors of reading will not produce large errors in time; and the object of interchanging the circuits is to prevent the loss of a record by the record mark falling higher above the disjunction mark than was expected and therefore off the recorder.

60. Schultz Chronoscope.—The Le Boulengé chronograph measures a single time interval only. When it is desired to measure the intervals between several successive events an instrument that provides a more extensive time scale is required.

Digitized by Google

The Schultz Chronoscope is an instrument of this class. An electrically sustained tuning fork, *c*, Fig. 30, whose rate of vibration is known, carries on one tine a quill point *b*, which bears against the blackened surface of the revolving cylinder *a*, and marks on it a sinusoidal curve which is the scale of time. By giving motion of translation to the cylinder past the fork the time scale may be extended helically over the whole length of the cylinder. The records of events, such as the passage of the shot through

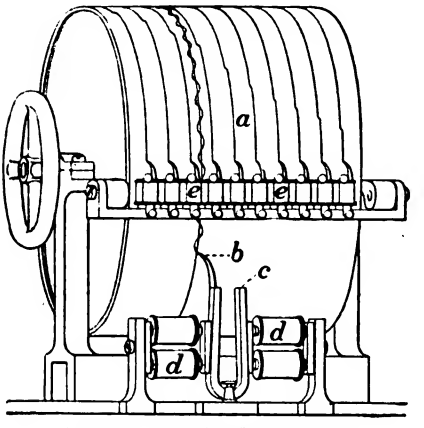

FIG. 30.—Schultz Chronoscope.

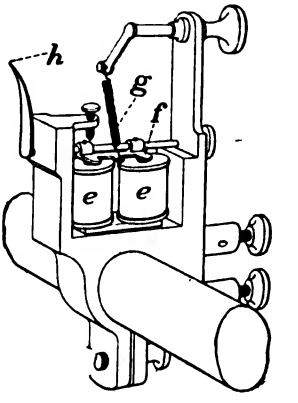

FIG. 31.—Marcel Deprez Register.

screens, are made by the breaking of successive circuits which pass through the Marcel Deprez registers shown at *e*, Fig. 30 and in Fig. 31. When the circuit is broken the magnet *e*, Fig. 31, is demagnetized, and the spring *g* rotates the armature *f* and the quill *h*, attached to it. This marks a bend or offset in the trace of the quill on the revolving cylinder, and the point of the bend referred to the time scale marks the instant of the breaking of the circuit.

It will be noted that the tuning fork has a constant lead with respect to any register. The point of the time scale that corresponds to any point on a register record is found at the length of this lead from the point on the time scale opposite the given point on the register record.

Digitized by Google

61. Mettagang Recorder.—Another instrument for measuring short periods of time, known as the Mettagang recorder, is illustrated in Fig. 32. A drum 1, which may be 18 ins. or more in circumference, is mounted as a flywheel on an electric motor 2, which is made to turn at a speed of, say, 30 revolutions per second. A

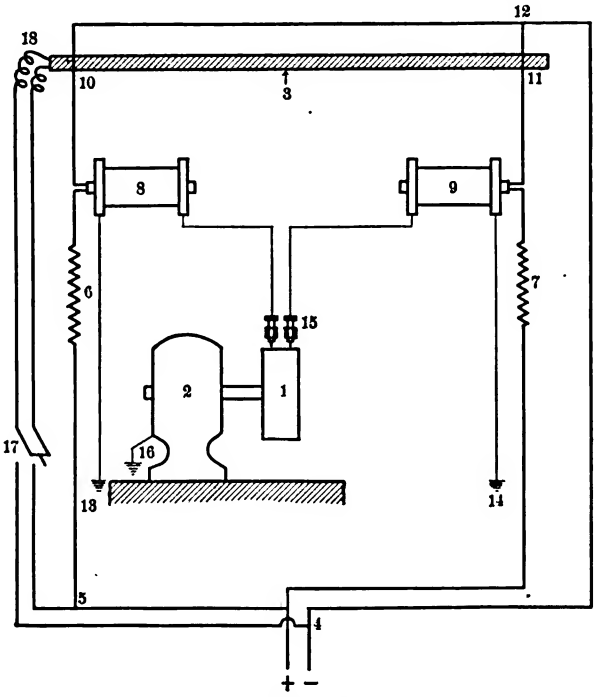

FIG. 32.—Mettagang Recorder.

1, drum. 2, motor. 3, cartridge of explosive. 4, 5, division of circuits. 6, 7, resistances. 8, 9, induction coils. 10, 11, wires passed through cartridge. 12, division of circuits. 13, 14, grounds. 15, spark plugs. 16, ground for motor. 17, switch. 18, ignition wire.

tachometer, not shown in the figure, connected with the motor, indicates its exact speed. As shown in the illustration, the instrument is connected to determine the time required for the detonation of a cartridge of high explosive 3, to travel from one end of the cartridge to the other.

The electrical connections for running the motor, not shown in

Digitized by Google

the figure, are of the usual kind, resistance being provided for changing the speed of the motor so as to permit the exact speed desired to be obtained. The electrical connections shown in the figure are used for firing the cartridge and for obtaining a record on the revolving drum.

The electrical mains, which may be those of a lighting circuit, divide at 4 and 5, the plus wires passing in parallel through two suitable resistances 6 and 7, then through the primaries of two induction coils 8 and 9, then through two points 10 and 11, a measured distance apart on the cartridge 3, and then to junction with the minus wire at 12.

One side of each of the secondary windings of the induction coils 8 and 9, is grounded at 13 and 14, while the other side is connected with two spark plugs 15, mounted above the rotating drum and on a line parallel to its axis. The motor is grounded at 16.

The firing circuit from the mains passes through the switch 17, and through a fine wire 18, passed through the end of the cartridge.

Operation.—To obtain a record of the time of detonation of the cartridge the outside surface of the rotating drum 1, is first covered with lampblack. With the switch 17 open, the motor is then started and the required speed obtained by observation of the tachometer reading. The cartridge is then fired by closing the switch 17, the resulting current heating the wire 18, to the necessary degree. When the explosion reaches the wires passing through the cartridge it breaks them, thus suddenly interrupting the primary circuits in the induction coils 8 and 9, and causing sparks to jump from the spark plugs to the surface of the revolving drum. The sparks make readily visible impressions on the blackened surface of the drum and by measuring the distance along the periphery of the drum from the impression made by the first spark from one of the plugs to that made by the first spark from the other, we can, knowing the speed of the drum, determine the time between these sparks, which is the time of detonation of the length of cartridge included between the wires.

Digitized by Google

This device is capable of measuring much shorter periods of time than the Boulengé chronograph. The times measured by it are relatively very accurate, but their absolute accuracy depends upon the accuracy of the tachometer, and the latter instrument has not yet been developed to a degree sufficient to justify as great confidence in the absolute measurements of time with the Mettagang recorder as with the Boulengé chronograph.

62. The Sebert Velocimeter.—This instrument is used to record the movement of the gun in recoil. A blackened steel ribbon, *S*, Fig. 33, is attached by the wire *T* to a bolt projecting from the trunnion of the gun. As the gun recoils it pulls the ribbon past

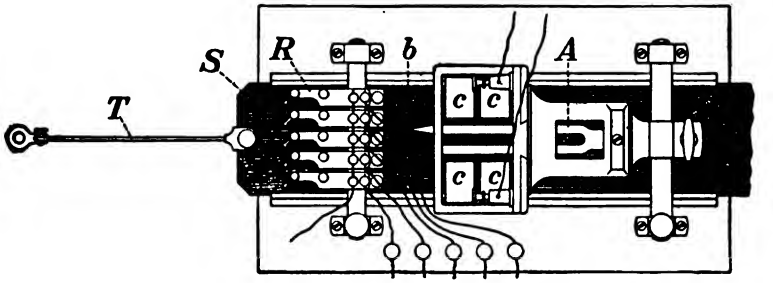

FIG. 33.—Sebert Velocimeter.

the registers *R* and the tuning fork *A*, whose rate of vibration is known. The quill on the tuning fork marks the time scale on the blackened ribbon as shown by the curve *t*, Fig. 34. The time occupied by the gun in traversing any length is obtained by laying off this length on the time scale and counting the vibrations and parts of a vibration included. The right line through the center of the time scale is made by pulling the ribbon past the fork when the fork is not vibrating. The line assists in the count of the number of double vibrations in any length.

The time scale is, therefore, a complete record of the movement of the gun; and by measuring from it the length traveled by the gun during any vibration of the fork the velocity of the gun at the middle instant of the vibration may be determined. When the

Digitized by Google

gun moves in free recoil, that is, when it is so mounted that it recoils horizontally and with very little friction, the velocities of the projectile may be determined from the velocities of the gun; and the pressures necessary to produce these velocities in the projectile may then be determined.

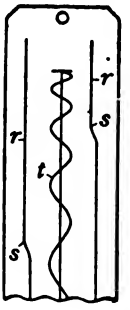

FIG. 34.—Curve Made by Quill of Sebert Velocimeter.

The registers have no function in the measurement of the recoil proper, but may be used to record any event happening while the recoil record is being made. The instant of the departure of the projectile from the bore is usually thus recorded, and independent measurement of the velocity of the projectile between points in the bore may also be made.

Two register records are shown by the lines *r*, Fig. 34, the event recorded by each register having occurred when the offset at *s* was made. The time that elapsed between the beginning of movement and the occurrence of the event recorded

FIG. 35.—Method of measuring interior velocities by cutting holes in gun.

is obtained by laying off on the time scale the length from the origin of the register record to the offset.

Methods of Measuring Interior Velocities.—Two methods that

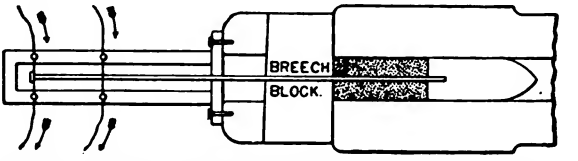

FIG. 36.—Method of measuring interior velocities by extension rod on projectile.

have been used in determining the instant of the projectile's passage past selected points in the bore are shown in Figs. 35 and 36.

Digitized by Google

Some circuit-breaking device is used at the points selected, and the electric wires are led to any suitable velocity instrument.

63. Pressure in Guns.—Pressures in guns are now universally measured by means of crusher gauges similar to those shown in Figs. 37 and 38. A small copper cylinder, 4, is held in a central position in the steel housing, 1, by the spring or rubber ring, 6. One end of the copper cylinder rests on the closing plug, 3, and the other end bears against the piston, 2. A copper obturating cup, 5, prevents the entrance of gas along the side of the piston to the chamber occupied by the copper cylinder, and a copper gasket, 8, performs the same office for the threads of the closing plug.

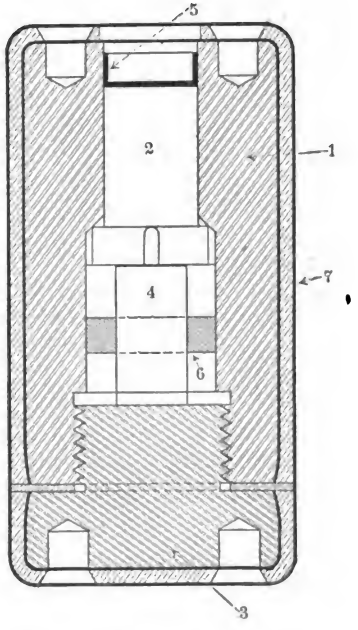

FIG. 37.—Loose Crusher Gauge.

1, housing. 2, piston. 3, closing plug. 4, copper cylinder. 5, copper obturating cup. 6, rubber centering ring. 7, copper cover.

The gauge shown in Fig. 37 is placed loose in the powder chamber of the gun at the rear of the charge. To prevent damage to the gun on firing, its outside surface is covered with a copper shell, 7. The gauge shown in Fig. 38 is screwed into a threaded hole provided in the forward end of the breech block.

When the gun is fired the pressure of the powder gas acting on the end of the piston compresses the copper cylinder. The amount of compression, the difference between the measured original length of the copper cylinder and its measured length after firing, is assumed to be due to the maximum pressure that existed in the gun.

The Micrometer Caliper.—The micrometer caliper, Fig. 39, is used for measuring the lengths of the copper cylinders before and

Digitized by Google

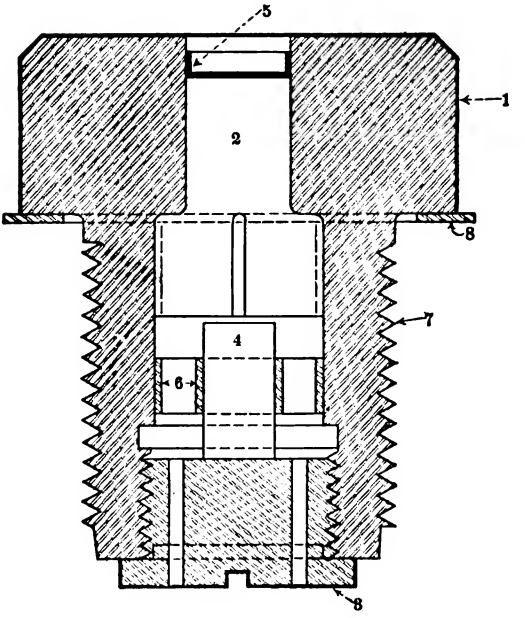

FIG. 38.—Fixed Crusher Gauge.

1, housing. 2, piston. 3, closing plug. 4, copper cylinder. 5, copper sealing cup. 6, spring or rubber centering-ring. 7, threads for screwing into breech block.

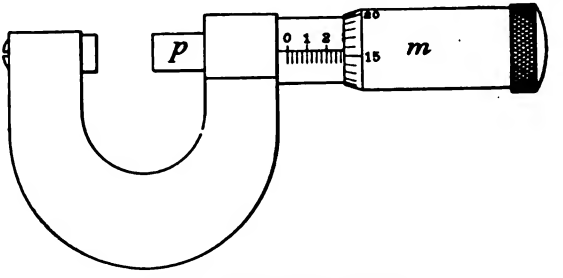

FIG. 39.—Micrometer Caliper.

Digitized by Google

after firing. This instrument is used generally for the measurement of short exterior lengths.

The movable measuring point *p* has a screw thread of forty turns to the inch cut on its shaft. One turn of the attached micrometer head, *m*, therefore, moves the point one-fortieth or 25-thousandths of an inch. By means of the scale on the spindle and the 25 divisions on the micrometer head, *m*, the distance that separates the measuring points can be read to the one-thousandth of an inch, and by further subdividing the divisions on the head by the eye, readings to the ten-thousandth of an inch may be made. The figure represents the points as separated by 0.2907 inch.

64. The Tarage Table.—The copper cylinders used in the gauge are cut in half-inch lengths from rods very uniformly rolled and carefully annealed. A large number of cylinders from each lot treated are tested in a static testing machine. From the results of this test a table is made which shows the average amount of compression for each static load applied.

It is assumed that the compression obtained in firing is due to a load on the piston of the crusher gauge equal to the load that produced the same compression in the static machine.

The pressure per square inch in the gun may, therefore, be obtained by dividing the static load that corresponds to the observed compression by the area of the piston in the crusher gauge. Knowing the area of the piston used a table of compressions and corresponding pressures per square inch, known as the tarage table, is readily constructed.

The area of the piston in cannon gauges is $\frac{1}{10}$ of a square inch and in the small arms gauges $\frac{1}{30}$ of a square inch.

Initial Compression of Copper Cylinder.—When the pressure in the gun is high and quickly developed it is, at first, very much greater than the resistance offered by the copper cylinder. The excess of pressure over resistance in this case accelerates the mass of the piston and develops considerable velocity in it. The energy of the piston due to this velocity is finally absorbed by further compression of the copper, but in the early stages of compression,

Digitized by Google

the mass of the piston prevents as great a compression as would be obtained if the pressure acted directly upon the copper cylinder instead of through the piston. It is, therefore, desirable to reduce the energy of the piston as much as possible and this may be done in two ways, by reducing its weight, and by limiting its travel and accompanying velocity. The piston is made as light as possible consistent with the duty it has to perform. To limit the travel the copper cylinders are initially compressed before using, by a load corresponding to a pressure somewhat less than the maximum pressure expected in the gun. Further compression will not occur until the load applied in the gun is close to that used in the initial compression.

The general practice is to use a copper initially compressed by a load corresponding to a pressure about 3000 lbs. less than that expected in the gun. Thus if a pressure of 35,000 lbs. is expected, a copper initially compressed by a load corresponding to 32,000 lbs. per square inch is used.

Small-arms Pressure Barrel.—In the measurement of pressures in small arms a specially constructed barrel whose bore is the same as that of the rifle barrel is used. The piston of the crusher gauge passes through a hole bored through the barrel over the chamber, and a steel housing erected over this part of the barrel serves as an anvil for the copper cylinder.

65. Accuracy of Gauge Pressures.—In preparing the data for the preparation of a tarage table the copper cylinders are slowly compressed by applying successive loads and measuring the amount of compression at each load. The final load for each compression remains on about 15 seconds. In a gun, however, the load is very quickly applied and the final load is quickly released. This difference in conditions has led many to believe that the copper cylinders cannot, on account of their viscosity and consequent requirement of time for compression, reach the same compression in the gun as they would under the same maximum load in the static machine. It is, therefore, held that the copper cylinders indicate pressures which are less than the true pressures in guns

Digitized by Google

and that they are chiefly useful for giving indications as to the relative pressures in different guns with different conditions of loading.

The Dynamic Method of Measuring Pressures.—This consists in determining the velocities of the gun in recoil, as by the Sebert velocimeter, or of the shot at different points of the bore. The differences of the velocities divided by the corresponding differences of the times give the accelerations, and the corresponding pressures are obtained by multiplying the accelerations by the mass. A pressure obtained in this manner is evidently only the pressure required to produce the observed acceleration in a body whose mass is that of the gun or of the projectile. That part of the pressure expended in overcoming the friction of the projectile in the bore and in giving rotation to the projectile is neglected. The measured pressure is consequently less than the true pressure exerted in the gun.

Comparison of the Two Methods.—When the same pressure in the bore is measured by the dynamic method and by the crusher gauge the result obtained dynamically is usually the greater, and this notwithstanding the fact, as just explained, that the dynamically measured pressure is less than the true pressure.

This justifies the belief expressed in the preceding article that the crusher gauge records less than the actual pressure in the gun.

Notwithstanding doubt as to the actual relation between true pressures and pressures indicated by crusher gauges, the latter are the most convenient known instruments for obtaining an idea of the relative values of pressures in guns. They are universally used in the proof firing and testing of guns and powder and the relative results which they give are consistent.

66. Direct Measurement of Pressure as a Function of Time.—The crusher gauges described above give the maximum pressure reached by the powder gas in the chamber of a gun, or in any closed chamber, but they give no record of the manner in which the pressure is developed.

The dynamic method described above gives the time record of the development of pressure, but its application requires special apparatus for each gun and takes much time. To obtain conve-

Digitized by Google

niently a time record of the development of the pressure Vieille used a crusher gauge similar to those already described with the following exceptions: A small tuning fork is attached to the housing with its axis parallel to the piston and with its point resting on a blackened plane surface on the piston. In the initial position the point of the tuning fork is held to one side of its central position by a lug on the piston. A slight movement of the piston will release the tuning fork from the lug and allow it to vibrate with decreasing amplitude while the copper is being compressed, thus marking a sinusoidal curve on the plane surface on the piston. The rate of vibration being known it is possible to calculate from the curve the time corresponding to a given movement, as well as the pressure corresponding to that movement.

This instrument gives the time-pressure curve up to the maximum pressure, but since the movement of the piston then stops, no record of the fall of the pressure is given. In a modification of the above instrument a strong steel spring is used instead of the copper cylinder to oppose the movement of the piston.

This modified instrument gives the time-pressure curve for some time after the maximum pressure.

Bichel Apparatus.—The apparatus described above is convenient for measuring the development of pressures in guns, but on account of the small scale of the time record it is not very accurate. In experiments with explosives in closed chambers it is sometimes desirable, among other things, to get an accurate time-pressure curve. An apparatus used for this purpose, known as the Bichel apparatus, is shown in Fig. 40. The powder to be tested is placed in the bomb 1 and fired. The pressure developed acts on the piston 3 of the spring gauge 2, which is similar to a steam-indicator gauge, compressing the spring and driving the pencil arm 7 to the left. At the same time the drum 4 covered with paper is being rotated at a known speed by the electric motor 4. It is evident that the pencil at the end of 7 will describe a line on the paper surrounding the drum of which the abscissas will be time and the ordinates pressure. The scale of time will depend upon the speed of the

Digitized by Google

motor and the scale of pressure upon the strength of the spring of the gauge.

This apparatus has not been developed for measuring pressures in guns, but is used principally for comparing the relative quickness of different explosives by determining their time-pressure curves.

67. Petavel's Time-Pressure Gauge.—In the crusher gauges and spring gauges, described above, the piston has considerable movement at the time the pressure reaches its maximum value. The effect of the mass of the piston, described in Art. 63, therefore,

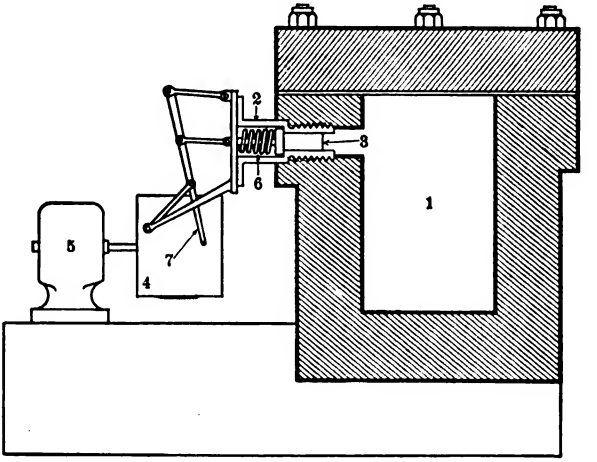

FIG. 40.—Bichel Apparatus.

1, bomb. 2, spring pressure gauge. 3, piston. 4, revolving drum. 5, motor. 6, spring. 7, pencil arm.

comes into play, with the result that for quick explosives the measured pressure does not truly represent the actual pressure.

To overcome this defect Petavel uses a solid steel cylinder working within its elastic limit instead of a copper cylinder or steel spring, to resist the movement of the piston. The movement of the piston and the mass effect are thus much reduced. To obtain a record of its movement the piston is connected with a small mirror in such a way as to cause the latter to rotate around an axis in its plane when the piston is moved very slightly by the pressure developed.

Digitized by Google

A beam of light falling upon the mirror is reflected and caused to fall upon a photographic film placed around a rotating drum similar to that used in the Bichel apparatus. When pressure is developed and the mirror rotated the beam of light is deflected through a small angle and caused to move on the rotating drum in the same manner as the pencil in the Bichel apparatus. All other parts of the film being protected from light, a photographic record of the time-pressure curve is thus made on it.

This gauge is probably the most accurate yet developed for

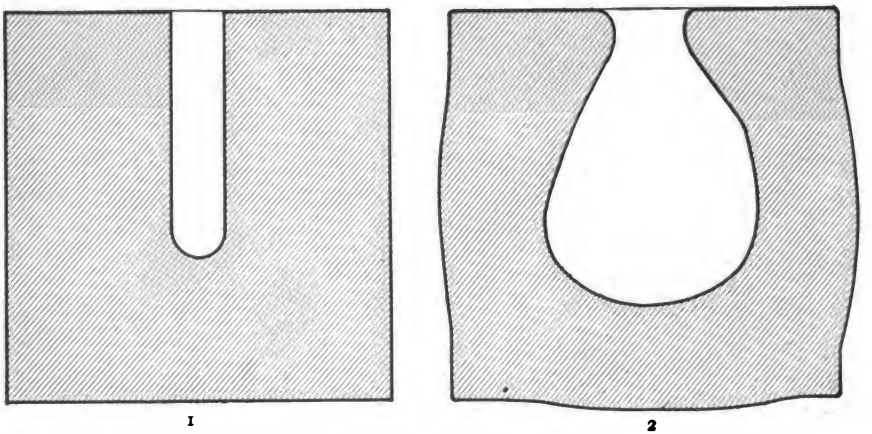

FIG. 41.—Trauzl Lead Blocks.
1, before explosion. 2, after explosion.

measuring pressures in closed chambers. It has not yet been developed for measuring pressures in guns.

Trauzl Lead Block Test.—In this test 10 grams of the explosive to be tested are placed in the hollow of a lead cylinder of definite dimensions, shown at the left in Fig. 41, and known as the Trauzl Lead Block. On explosion the cylinder is bulged out, as shown at the right of the figure, and the volume of the cavity is increased.

The relative " strength " of the explosive, as measured by the test, is the ratio of the volume of the cavity after explosion to the original volume. It is evident that the increase of volume depends

Digitized by Google

partly on the pressure which the explosive would be capable of developing in a closed chamber and partly on the quickness of the explosive. If the explosive were very slow all the gas would escape from the open cavity before expanding it appreciably, though, if confined in a closed chamber, it might exert a high pressure. On the other hand a very quick explosive might expand the cavity appreciably even if the pressure it could develop in a closed chamber were moderate.

Trauzl lead blocks are used principally for getting an idea of the general effect of a new high explosive in comparison with others whose effects are known.

68. Comparison of Measured Pressures in a Closed Chamber With Those Obtained by Theory.—When the pressures calculated as explained in Art. 55 are compared with those measured by one of the pressure gauges, described above, it will be found that for low explosives the former are considerably higher than the latter. This may be explained by the fact that during the appreciable time required for the pressure to rise to its maximum value, considerable heat is lost to walls of the closed chamber, which loss of heat, with its accompanying lowering of temperature, was not considered in working out the theoretical equations for temperature and pressure given in Arts. 50 and 55.

The loss of heat depends upon the time required for the pressure to reach its maximum value, as well as upon the shape of the closed chamber and the material of which it is made. For high explosives the time to maximum pressure is small, the loss of heat during this time may be neglected, and the equations of Arts. 50 and 55 may be assumed as giving correct results.

For low explosives the time to maximum pressure, especially at low densities of loading, is large, and the loss of heat during this time may be as much as 35% of the total heat given off.

The pressure given by the equations of Arts. 50 and 55 for these explosives are, therefore, the pressures which they would give providing the explosion were made in a closed chamber of which the walls absorbed no heat.

Digitized by Google

CHAPTER IV

INTERIOR BALLISTICS

69. Scope.—*Ballistics* is the science that treats of the motion of projectiles.

Interior ballistics treats of the motion of the projectile while still in the bore of the gun. It includes a study of the mode of combustion of the powder, the pressure developed and the velocity of the projectile along the bore of the gun. The study of interior ballistics was first put on a scientific basis by Sarrau, an eminent French engineer, who first developed formulas based on thermodynamic principles connecting the velocity, pressure and travel of the projectile in a gun.

Much useful information tending to improvement in both powder and guns has been obtained by a study of interior ballistics.

By means of the formulas to be developed we may, having given the dimensions of the gun, weight of charge and projectile and granulation of the powder, calculate the curves of velocity and pressure in the bore of the gun as functions of travel of the projectile or as functions of the time. We may thus determine the muzzle velocity to be expected from a given charge, or we may determine the charge that will produce a required muzzle velocity.

By further application of the formulas we may design the granulation of the powder for a given gun so as to obtain the highest possible muzzle velocity with a given weight of projectile while keeping the pressure along the bore within the limits imposed by the strength of the walls of the gun and the weight of charge low enough for convenient loading.

Lastly, when a new gun is to be designed, the formulas enable us to calculate the size of powder chamber and length of gun that

Digitized by Google

will be necessary in order that the required muzzle velocity may be obtained within the limit of pressure for which the gun is to be designed.

Having determined the powder pressure curve for the gun we may, by the principles of gun construction to be studied later, design the walls of the gun to withstand the expected pressure at each point.

70. Early Investigations.—In 1743 Benjamin Robins described, before the Royal Society of England, experiments that he had made to determine the velocities of musket balls when fired with given charges of powder. To measure the velocities he invented the ballistic pendulum, which consisted simply of a large block of wood suspended so as to move freely. The bullet was fired into the block of wood, and the velocity impressed upon the pendulum was measured. By equating the expressions for the quantities of motion in the bullet before striking the pendulum, and in the pendulum after receiving the bullet, the velocity of the bullet was obtained. The gun pendulum, which consisted of a gun mounted to swing as a pendulum, was also invented by Robins. Among other deductions made from his experiments Robins announced the following. The temperature of explosion is at least equal to that of red-hot iron; the maximum pressure exerted by the powder gases is equal to about 1000 atmospheres; the weight of the permanent gases is about three-tenths that of the powder, and their volume at atmospheric temperature and pressure about 240 times that occupied by the charge.

Dr. Charles Hutton, Professor in the Royal Military Academy, Woolwich, continued Robins's experiments, 1773 to 1791, improving and enlarging the ballistic pendulum so that it could receive the impact of one-pound balls. He verified Robins's deductions as to the nature of the gases, but put the temperature of explosion at double that previously deduced, and the maximum pressure at 2000 atmospheres. Hutton produced a formula for the velocity of a spherical projectile at any point of the bore, upon the assumption that the combustion of the charge is instantaneous and that

Digitized by Google

the expansion of the gas follows Mariotte's law—no account being taken of the loss of heat due to work performed—a principle which, at that time, was unknown.

In 1760 the Chevalier D'Arcy made the first attempt to determine dynamically the law of pressure in the bore by successively shortening the length of the barrel and measuring the velocity of the bullet for each length. The pressures were determined from the calculated accelerations.

In 1792 Count Rumford, born in the United States, endeavored to make direct measurement of the pressure exerted by fired gunpowder by measuring the maximum weights lifted by different charges fired in a small but very strong wrought-iron mortar, or eprouvette. He determined a relation existing between the pressure of the powder gases and their density. The maximum pressure that would be exerted by the gases from a charge that completely filled the chamber was, as calculated by Rumford, about 100 tons to the square inch. Noble and Abel, in their later experiments, arrived at 43 tons per square inch as the maximum pressure under these conditions. Their value is now accepted as being very near the truth. The great difference in the two determinations is probably due to the fact that Rumford deduced his value for the maximum pressure from experiments with small charges that did not fill the chamber, so that the energy of the gases was greatly increased by the high velocity they attained before acting on the projectile.

Later Investigations.—In the years 1857 to 1860 General Rodman of the Ordnance Department, United States Army, conducted the experiments that resulted in the change of form of powder grains and their variation in size according to the caliber of the gun. He devised the pressure gauge for directly measuring the maximum pressures of the powder gases. His gauge differed from the pressure gauge now in use only in the method employed to record the pressure. The piston of the gauge carried at its inner end a V-shaped knife, and the amount of the pressure was read from the length of the cut made by the knife in a disk of copper.

Digitized by Google

General Rodman was also the author of the principle of interior cooling of cast-iron cannon, by the application of which principle the metal surrounding the bore of a gun was put under a permanent compressive strain which greatly increased the resistance of the gun to the interior pressures.

In 1874 Noble and Abel announced the results of their experiments on the explosion of gunpowder in closed vessels.

Later, Sarrau, Vieille, Noble and others made similar experiments with smokeless powder.

In 1875 Sarrau first proposed his mathematical formulas connecting the travel and velocity of the projectile and the pressure developed in the bore of a gun.

Sarrau's formulas were based on the use of black powder. When smokeless powder commenced to be used it was found that the results of calculations with these formulas were inaccurate.

About 1904 Gossot and Liouville published new formulas of interior ballistics based on those of Sarrau, but adapted to smokeless powders,

Method of Investigation.—In investigating the subject of interior ballistics we will consider, first, the quantity of energy released per pound of powder as the charge is burned; second, the lineal rate of burning of the powder; third, the effect of different forms of granulation on the relation between the lineal rate of burning of the powder and the rate of burning of the charge; and, fourth, the various ways in which the energy resulting from the burning of the charge is utilized.

Calculation of Energy per Pound and Specific Rate of Combustion of Smokeless Powder

71. Energy of Combustion of Nitrocellulose.—The nitrocellulose used in the manufacture of the service smokeless powder contains about 12.60 per cent nitrogen. It is composed principally of deca-nitrocellulose, whose formula is $C_{24}H_{30}(NO_2)_{10}O_{20}$, the percentage of nitrogen being 12.75, and probably a small quantity

Digitized by Google

ennea-nitrocellulose, whose formula is $C_{24}H_{31}(NO_2)_9O_{20}$, the percentage of nitrogen being 11.966.

The formula assumed for the combustion of pure deca-nitrocellulose, per cent of nitrogen 12.75, is as follows:

$$\begin{array}{lllllll} \text{Mol. wts., } 1098 = & 616 & +280 & +36 & +26 & +140. & \\ C_{24}H_{30}(NO_2)_{10}O_{20} = & 14CO_2 + & 10CO + & 2H_2O + & 13H_2 + & 5N_2. & (1) \\ \text{Volume of gases} = & 14 & +10 & +2 & +13 & +5 & =44. \end{array}$$

Applying the principles learned in the chapter on explosives, we determine the heat given off at a constant pressure of 103.3 kg. per sq. dec. and with the gases at 15° C., as follows:

$$\begin{array}{rl} 14CO_2 - 14 \times 94.3 = & 1320.2 \text{ large calories.} \\ 10CO \ - 10 \times 26.1 = & 261 \text{ large calories.} \\ 2H_2O - \ 2 \times 58.3 = & 116.6 \text{ large calories.} \\ \hline \text{Total heat of combustion} = & 1697.8 \text{ large calories.} \\ \text{Heat of formation of molugram} = & 651 \text{ large calories.} \\ \hline Q_{mp} = & 1046.8 \text{ large calories.} \end{array}$$

From Eq. (43) article 48, we have

$$Q_{mv} = Q_{mp} + 0.5724 n_a,$$

and in this case, $n_a = 44$.

Hence $Q_{mv} = 1046.8 + 25.19 = 1071.99$ large calories.
This is the amount of heat that would be given off by one molugram of the explosive if it were exploded in a closed chamber and the resulting gas cooled to 15° C.

The gas at this temperature still contains heat which must be added to Q_{mv} to get the total heat in a molugram.

The volume of gas from one molugram at atmospheric pressure and 0° C. is $44 \times 22.32 = 982.08$ cu.dec. At 15° C. this volume is increased by $982.08 \times \frac{15}{273} = 54$ cu.dec., making it $982 + 54 = 1036$ cu.dec.

Digitized by Google

We have from Eq. (33) article 45

$$\text{Heat in the gas} = \frac{1}{E(k-1)} P(\text{volume} - \text{covolume}), \quad . \quad (2)$$

where E = mechanical equivalent of heat in kilogram-meters per degree C. = 425;

k = ratio of specific heats = 1.30;

P = pressure in kilograms per sq.dec.

Assuming the covolume = volume of original molugram

$$= \frac{1098}{\text{density}} = \frac{1098}{1.6} = 686 \text{c.c.} = .686 \text{ cu.dec.},$$

we have,

$$\text{Heat in gas in large calories} = \frac{.333}{425} \times \frac{103.3(1036 - .686)}{10} = 83.75.$$

The total heat in a molugram is therefore

$1071.99 + 83.75 = 1155.74$ kg.-deg. C.-calories, or large calories.

Total heat in 1 kg. $= 1155.74 \times \frac{1000}{1098} = 1052.6$ large calories.

Total heat in 1 lb. $= 1052.6$ lb.-deg. C.-calories.

Total heat in 1 lb. $= 1052.6 \times \frac{9}{5} = 1894.7$ lb.-deg. F.-calories, or B.T.U.

Total heat in 1 lb. as work $= 1894.7 \times 778 = 1{,}474{,}000$ ft.lbs.

72. For Ennea-Nitrocellulose, Per Cent of Nitrogen 11.966, we have:

Molecular wts., $1053 = 440 + 592 + 72 + 23 + 126.$

$$C_{24}H_{31}(NO_2)_9O_{20} = 10CO_2 + 14CO + 4H_2O + 11.5H_2 + 4.5N_2. \quad (3)$$

Volumes $= 10 + 14 + 4 + 11.5 + 4.5 = 44.$

$10CO_2 - 10 \times 94.3 = 943$ large calories.

$14CO - 14 \times 26.1 = 365.4$ large calories.

$4HO - 4 \times 58.3 = 233.2$ large calories.

Total heat of combustion $= 1541.6$ large calories.

Heat of formation $= 678$ large calories.

$Q_{mp} = 863.6$ large calories.

$Q_{mv} = 863.6 + 25.19 = 888.79$ large calories.

Digitized by Google

Heat in gas,
same as for deca = 83.75 large calories.
Total heat in 1 molugram = 972.54 large calories.
Total heat in kg. = $972.54 \times \frac{1000}{1053} = 923.59$ large calories.
Total heat in 1 lb. = 923.59 lb.-deg. C.-calories.
Total heat in 1 lb. = $923.59 \times \frac{9}{5} = 1662.5$ lb.-deg. F.-calories, or B.T.U.
Equivalent in work = $1662.5 \times 778 = 1{,}293{,}400$ ft.lbs. per lb

For Octa-Nitrocellulose Per Cent of Nitrogen 11.111: .

Molecular wts., $1008 = 264 + 504 + 108 + 20 + 112$.

$$C_{24}H_{32}(NO_2)_8O_{20} = 6CO_2 + 18CO + 6H_2O + 10H_2 + 4N_2 \quad (4)$$

Volumes $= 6 + 18 + 6 + 10 + 4 = 44$.

$6CO_2$: $- 6 \times 94.3 = 565.8$ large calories.
$18CO$: $- 18 \times 26.1 = 469.8$ large calories.
$6H_2O$: $- 6 \times 58.3 = 349.8$ large calories.
Total heat of combustion = 1385.4 large calories.
Heat of formation = 705.0 large calories.

$Q_{mp} = 679.4$ large calories.
$Q_{mv} = 679.4 + 25.19 = 704.59$ large calories.
Heat in gas = 83.75 large calories.

Total heat in 1 molugram = 788.34 large calories.
Total heat in 1 kg. = $788.34 \times \frac{1000}{1008} = 782.08$ large calories.
Total heat in 1 lb. = 782.08 lb.-deg. C.-calories.
Total heat in 1 lb. = $782.08 \times \frac{9}{5} = 1407.7$ lb.-deg. F.-calories, or B.T.U.
Equivalent in work = 1,095,200 ft.lbs. per lb.

Plotting of Results.—These results plotted on cross-section paper, as a function of the percentage of nitrogen in the nitrocellulose, show that the energy per pound within the limits of nitrogen considered in the calculations is almost a linear function of the percentage of nitrogen. It may be calculated by the following equation,

$$n' = 231{,}500 \text{ [per cent of N} - 6.37\%] \quad . \quad . \quad . \quad . \quad (5)$$

Digitized by Google

73. **Effect of Moisture and Volatiles.**—Our service smokeless powder is manufactured from nitrocellulose of an average per cent of nitrogen of about 12.60, by colloiding it with a solvent of ether-alcohol. After granulation the bulk of this solvent is dried out, but 2% to 6% may remain in the powder, the amount depending upon the size of grain.

The alcohol used in the solvent contains 5% water, which generally remains in the powder after drying. Additional water may be absorbed from the air during the process of manufacturing and handling. Recent lots of powder also contain .4% to .8% of a stabilizer, and .30 caliber rifle powders contain, in addition, 1% of graphite.

Smokeless powder may, therefore, be considered to be a mixture of nitrocellulose, alcohol, water, and sometimes a stabilizer and graphite. Most of the ether used is evaporated out during the drying process.

From Eq. (5), the energy per pound of pure nitrocellulose of 12.60% nitrogen is 1,442,000 ft.lbs. per pound. If now an inert material, that is, one that takes no part in the reaction at combustion, is mixed with the nitrocellulose the energy per pound of the resulting material will be less than that of pure nitrocellulose. For instance, if .99 lb. of pure nitrocellulose of 12.60% N is mixed with .01 lb. of inert material, the inert material will be 1% of the total weight and the energy per pound of the resulting material will evidently be $1{,}442{,}000 \times .99 = 1{,}427{,}580$ ft.lbs. per pound.

Now, of the materials entering powder as given above, water is considered as having the same effect as the same percentage of inert matter. Alcohol has a greater effect than inert matter for the reason that the carbon contained in it combines with the CO_2 resulting from the combustion of the nitrocellulose, thus forming a larger quantity of CO, and a smaller quantity of CO_2, than in the combustion of pure nitrocellulose. Theoretical considerations and practical tests indicate that the effect of 1% alcohol in reducing the energy per pound of nitrocellulose is equal to the effect of 2.5% inert matter.

Digitized by Google

In the same way the effect of 1% stabilizer, which is higher in carbon content than alcohol, is shown to be equal to the effect of 4% inert matter. Graphite, though entirely carbon, does not readily take part in the reaction and, therefore, the effect of 1% graphite in reducing the energy per pound of nitrocellulose is considered equal to that of 2.5% inert matter.

The percentage of nitrogen in the nitrocellulose used is carefully determined for each lot of powder, as is also the percentage of moisture and volatiles (M. & V.), remaining in the finished powder. Moisture and volatiles consist principally of water and alcohol. Unless separately determined we shall assume that half the total percentage of M. & V. is water and the other half alcohol.

Example 1. To illustrate the method of calculating the total energy per pound of nitrocellulose smokeless powder we will assume a powder whose chemical analysis is as follows:

Average nitrogen in nitrocellulose of which the powder was made, 12.60%.

Moisture and volatiles, 6%.

Stabilizer, .4%.

By reference to Eq. (5), the energy per pound of pure nitrocellulose 12.60% nitrogen is 1,442,000 ft.lbs per pound.

Of the 6% M.&V. 3% is assumed to be water, and 3% alcohol.

3% water has the same effect as 3% inert matter.

3% alcohol has the same effect as 7.5% inert matter.

.4% stabilizer has the same effect as 1.6% inert matter.

Total effect of M. & V. and stabilizer the same as 12.1% inert matter.

The energy per pound of the powder is therefore

$$1{,}442{,}000\ [1.00 - .121 = .879] = 1{,}266{,}000 \text{ ft.lbs. per pound.}$$

In the calculations to follow, we will represent the energy per pound of powder in ft.lbs. by n'.

74. Specific Rate of Combustion.—As used in this discussion, the specific rate of combustion of smokeless powder is the rate of combustion in inches per second, measured perpendicular to the

Digitized by Google

burning surface, when the powder is burning in its own gas at a pressure of 1 lb. per square inch.

Direct determinations of the specific rate of combustion are difficult to make, for the reason that at low pressures smokeless powder does not burn readily unless supplied with oxygen from the air

Determinations of the rate of combustion in the atmosphere, at atmospheric pressure, indicate that it is about .05 in. per sec., but this high rate is partly due to the oxygen of the air.

Theoretical considerations lead to the belief that the specific rate of combustion is directly proportional to the energy per pound of powder, and that it is inversely proportional to the sum of the following quantities:

(*a*) The energy required to heat a pound of powder from the temperature it may have at any time to 356° F., the ignition temperature. The total change in temperature required to start ignition is at first 356° F. minus the temperature of the powder at loading, but as successive layers of the powder burn the newly uncovered layers have become heated and the increase of temperature required for the ignition is no longer as great as at the beginning. The average increase of temperature required for the ignition of successive layers during combustion may be considered a function of (356 F. – tem. of powder). The average energy in foot-lbs. required to raise a pound of powder during combustion to 356 F., the ignition temperature, is taken as 875 (356° F. – tem. of powder).

(*b*) The energy required to evaporate the water and alcohol from the powder. It is assumed that this evaporation from successive layers takes place before they burn.

The energy required to evaporate water is about 840,000 ft.lbs. per pound and that required to evaporate alcohol is 298,000 ft.lbs. per pound.

Based on these considerations the expression for the specific rate of combustion, represented by k', is as follows:

$$k' = \frac{.0000667n'}{875(356^\circ \text{ F.} - \text{tem. of powder}) + 8400 \times \% \text{ water} + 2980 \times \% \text{ al.}} \quad (6)$$

Digitized by Google

The constant in the numerator was determined by trial.

It is known that the specific rate of combustion also varies with the density of the powder, being higher for a lower density, but the variation in density of different lots of powder is not great.

Rate of Combustion at Variable Pressures.—It is known that smokeless powder burns faster at high pressures than at low pressures. Writers on interior ballistics have made various empirical assumptions, some of them based on experiment, to enable them to introduce this fact into their formulæ.

Let r represent the thickness burned in inches, measured perpendicular to the burning surface;

k' the specific rate of combustion in inches per second;

P the pressure of the gases in which the powder is burning in pounds per square inch.

The assumption made by all writers is,

$$\frac{dr}{dt} = k'P^{\phi}, \quad \ldots\ldots\ldots \quad (7)$$

in which ϕ is a constant exponent. Different writers differ only in the value of the constant ϕ employed.

Sarrau assumed $\phi = \frac{1}{2}$, but this applied to the black powders then in use. Other writers have used $\frac{2}{3}$, $\frac{3}{4}$, and 1.

The value $\frac{2}{3}$ was obtained experimentally by Vieille in France, by experiments with smokeless powder in a closed chamber.

It was later used by Gossot and Liouville, also in France, in their method of interior ballistics.

In this discussion the value of ϕ will be considered = 1, that is the rate of combustion will be considered as varying directly with the product of the specific rate and the pressure.

PROBLEMS

1. Find the energy per pound and specific rate of combustion of a powder containing 12.64% nitrogen in the nitrocellulose, 0.4% stabilizer and 5.5% total volatiles of which 2.5% is water.

Ans. $n' = 1{,}280{,}000$ ft.lbs.; $k' = .0001556$ in. per sec.

Digitized by Google

2. Supposing the powder in Problem 1 to lose alcohol in storage until its total volatile content is reduced to 4.5%. What are now the values of n' and k'? Ans. $n' = 1{,}315{,}000$ ft.lbs.; $k' = .0001696$ in. per sec.

3. Supposing the powder in Problem 2 to absorb water until its total volatile content is increased to the original percentage given in Problem 1. What are now the values of n' and k'?

Ans. $n' = 1{,}303{,}000$ ft.lbs.; $k' = .0001440$ in. per sec.

Nomenclature

The following is an alphabetical list of the nomenclature used in this discussion on interior ballistics:

a, one of the characteristics of the grain.

A, area of cross-section of the bore of the gun in square inches.

B, constant whose value is given in the discussion (see Eq. 95).

c, weight of total charge in pounds.

c_v, specific heat at constant volume.

c_p, specific heat at constant pressure.

c_z, weight of charge burnt, corresponding to z.

C, capacity of the chamber of the gun in cubic inches.

d, diameter of the perforation of the powder grain in inches.

d_1, diameter of the bore of the gun in feet.

D, outside diameter of the powder grain in inches.

e, constant, for one round, ratio between velocity of recoil of gun and velocity of projectiles.

e_p, constant, for one round, ratio between work of passive resistance and total energy of motion.

e_h, constant, for one round, ratio between energy lost as heat to the gun and total energy of motion.

E, mechanical equivalent of heat.

E_h, energy lost to the gun as heat in foot pounds.

G, constant (see Eq. 126).

g, acceleration of gravity.

H, constant (see Eq. 88).

J, J_1, constants (see Eq. 99).

k, ratio of specific heat at constant pressure to that at constant volume.

Digitized by Google

k', specific rate of combustion of the powder in inches per second.

k_2, radius of gyration of the projectile in feet.

K, K_1, constants (see Eq. 100).

l_0, reduced length of the initial air space in feet.

l_1, reduced length of the powder chamber in feet.

L, length of grain in inches.

M, constant (see Eqs. 71 and 105).

M_1, constant (see Art. 96).

n, one of the characteristics of the grain.

p, weight of the projectile in pounds.

p', reduced weight of the projectile in pounds.

p_1, weight of the gun and recoiling parts in pounds.

p'', constant, for one round (see Eq. 67).

P, mean total pressure in the bore between the projectile and the breech of the gun at any instant in pounds per square inch.

P_a, total accelerating pressure at base of projectile in pounds per square inch.

P_a', mean accelerating pressure at any instant in pounds per square inch.

P_{ab}, total accelerating pressure at breech of the gun.

P_{ar}, pressure at base of projectile in pounds per square inch giving it acceleration of rotation.

P_{at}, pressure at base of projectile in pounds per square inch giving it acceleration of translation.

P_b, total pressure at breech of gun in pounds per square inch.

P_0, pressure required to start the projectile in pounds per square inch.

P_p, passive resistance at any instant in pounds per square inch.

P_{pm}, mean value of passive resistance throughout the bore.

P_{mep}, mean effective pressure to muzzle.

q, one of the characteristics of the grain.

Q_{mp}, heat given off by one molugram of explosive at constant pressure, in large calories.

r, thickness of powder burned in inches at any time.

Digitized by Google

R, half the least dimension of the grain.

R', constant ratio (see Eq. 79, etc.).

T, absolute temperature of the powder gas, degrees centigrade.

u, travel of the projectile with reference to the gun at any instant in feet.

U, total travel of the projectile in the gun in feet.

v, velocity of the projectile in feet per second.

v_1, velocity of recoil of the gun in feet per second.

V, muzzle velocity of the projectile in feet.

x, for M.P. grains diameter of the grain divided by the diameter of perforation; for strip grain thickness of web divided by length; for S.P. grains, thickness of the web divided by the length of the grain.

X = constant (see Eq. 103).

X_1 = constant (see Art. 96).

y, for M.P. grain length of the grain divided by the outside diameter; for strip grain thickness divided by width.

y', proportional part of the weight of a grain or charge burnt corresponding to z.

y'_0, value of y' when projectile starts.

Y = constant (see Eq. 104).

Y_1, constant (see Art. 96).

$z = \frac{r}{R'}$, proportional part of the least dimension of the grain burnt at any time.

z_0, value of z when projectile starts.

Effect of Granulation

75. Forms of Granulation.—Modern smokeless powder is granulated in regular geometrical forms convenient for manufacture by pressing through a die or rolling between rollers. The principal forms actually in use are (see Fig. 42), the solid rod of considerable length used in English cordite; short or long cylinder with axial perforation; short or long flat strips, and cyl-

Digitized by Google

inder with seven axial perforations. Cross-sections of other forms of grain which have been proposed are also shown in the figure.

In all these granulations the least burning thickness is called the web of the grain.

Mode of Burning.—Under constant pressure, as in the air, a grain of modern smokeless powder burns in parallel layers and with uniform velocity in directions perpendicular to all the ignited surfaces. Under variable pressure as in a gun, powder burns with a variable velocity, but under that condition it still burns in parallel layers in the same manner as at constant pressure.

As the grains burn over their entire surface they will usually be

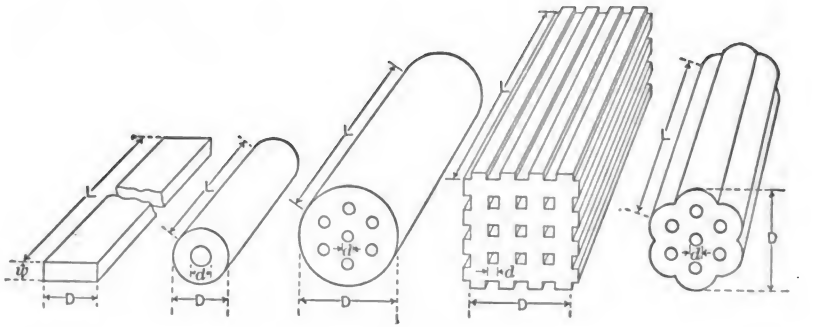

FIG. 42.—Forms of Granulation.

entirely consumed when a thickness equal to one-half their least dimension has been burned from each of the bounding surfaces. An exception to this is the multiperforated cylindrical grain in which pieces of triangular cross-section, called slivers, are left after a thickness equal to one-half the least dimension is burned from each surface.

Initial Volume of Grain.—The initial volumes of any of the grains usually used are easily figured from their dimensions. The dimensions of grains are measured in inches and their volumes are given in cubic inches.

Initial Burning Surface of Grain.—The initial burning surface of a grain is the area of the total outside surface of the grain including the surfaces of the ends and the perforations, if any.

Digitized by Google

Volume of One Pound of Solid Powder.—This volume may be obtained by dividing the volume of 1 lb. of water, 27.68 cu.in., by the density of the powder under consideration or representing by v_p the volume of 1 lb. of powder and by δ the density of the powder, we have

$$v_p = \frac{27.68}{\delta} \quad . \quad . \quad . \quad . \quad . \quad . \quad . \quad . \quad . \quad (8)$$

Number of Grains per Pound.—This is evidently the volume of 1 lb. of solid powder divided by the initial volume of 1 grain. Representing by n_p the number of grains per lb. and by v_g the volume of 1 grain, we have

$$n_g = \frac{v_p}{v_g} = \frac{27.68}{\delta v_g} \quad . \quad . \quad . \quad . \quad . \quad . \quad . \quad . \quad (9)$$

Initial Burning Surface per Pound.—This is the initial burning surface of 1 grain multiplied by the number of grains per pound. Representing by s_p the initial burning surface per lb. and by s_g the initial burning surface per grain, we have

$$s_p = n_p s_g = \frac{27.68 s_g}{\delta v_g} \quad . \quad . \quad . \quad . \quad . \quad . \quad . \quad (10)$$

6. Volume Burned, when a Thickness r is Burned.—For any granulation the volume of a grain after a thickness r has been burned may be determined by adding or subtracting $2r$, the total thickness burned on opposite sides, to or from the original dimensions and calculating the new volume as for the original grain.

Subtracting the new volume from the original volume we obtain the volume burned.

We shall find it useful to obtain an expression for the proportional part of the volume burned in terms of the proportional part of the least dimension burned.

The surface of a grain after a thickness r has been burned may be obtained in the same manner as the volume, that is, by adding or subtracting $2r$ from the original dimensions and calculating the

Digitized by Google

new surface, but we shall find it easier to obtain the new surface by differentiating the expression for the volume burned in terms of the proportional part of the least dimension burned.

Let w = the web of the grain or least burning thickness.

r = the thickness burned on one side.

$R = \frac{1}{2} w$ = the value of r when w is burned through.

L = the length of the grain.

D = the width of a prismatic grain, or the outside diameter of a cylindrical grain.

d = the diameter of the perforations in a perforated grain.

$x = \frac{w}{L} = \frac{2R}{L}$ for a prismatic or single perforated cylindrical grain, or $x = \frac{D}{d}$ for a multiperforated grain.

$y = \frac{w}{D}$ for a prismatic grain, or $y = \frac{L}{D}$ for a multiperforated grain.

$z = \frac{r}{R}$ = the proportional part of the least dimension burnt.

v_g = the initial volume of the grain.

v_{gr} = volume remaining when thickness r is burned.

v_{grb} = volume burned when thickness r is burned.

$y' = \frac{v_{grb}}{v_g}$ = proportional part of the volume burned.

s_g = the initial burning surface of the grain.

s_{gr} = the burning surface when thickness r is burned.

s_{gR} = the burning surface when thickness R is burned or the vanishing surface.

We will make calculations on the solid right prismatic grain, the single perforated cylindrical grain and the multiperforated cylindrical grain.

Solid Right Prismatic Grain.—*Volumes.*—The dimensions of this grain are length L, width D, thickness w, and we have

$$v_j = LDw.$$

Digitized by Google

After a thickness r has burned the new volume is,

$$v_{gr} = (L-2r)\ D-2r)\ (w-2r) =$$
$$LDw - 2[LD+Lw+Dw]r + 4[L+D+w]r^2 - 8r^3$$

and the volume burned is

$$v_{grb} = v_g - v_{gr} = 2[LD+Lw+Dw]r - 4[L+D+w]r^2 + 8r^3. \qquad (11)$$

Dividing by $v_g = LDw$, and placing $r = Rz = \frac{1}{2}\ wz$, and arranging we obtain

$$y' = \frac{v_{grb}}{v_g} = \frac{LD+Lw+Dw}{LD} z\left[1 - \frac{[L+D+w]w}{LD+Lw+Dw} z + \frac{w^2}{LD+Lw+Dw} z^2\right].$$

Placing $x = \frac{w}{L}$, and $y = \frac{w}{D}$, we have,

$$y' = (1+x+y)z\left[1 - \frac{x+y+xy}{1+x+y} z + \frac{xy}{1+x+y} z^2\right]. \quad . \quad . \quad (12)$$

Placing

$$\left.\begin{aligned} a &= 1+x+y \\ n &= -\frac{x+y+xy}{1+x+y} \\ q &= \frac{xy}{1+x+y} \end{aligned}\right\} \quad . \quad . \quad . \quad . \quad . \quad . \quad (13)$$

We have finally,

$$y' = a(1+nz+qz^2). \quad . \quad . \quad . \quad . \quad . \quad . \quad (14)$$

The quantities a, n and q depend only upon x and y, and therefore for the right prismatic grain they depend only upon the relative dimensions of the sides. When we come to consider other forms of grains, similar expressions having different values will be obtained, from which we conclude that the quantities a, n and q, known as the characteristics of the grain, depend only upon the form and relative dimensions of the grain.

Digitized by Google

Special Forms of Right Prismatic Grains.—*Long Strip.*—In this case x becomes nearly o, and we have approximately

$$a=1+y, \quad n=-\frac{y}{1+y}, \quad q=0. \quad . \quad . \quad . \quad . \quad (15)$$

Square strip.—In this case $y=1$, and we have

$$a=2+x, \quad n=-\frac{1+2x}{2+x}, \quad q=\frac{x}{2+x}. \quad . \quad . \quad (16)$$

If the strip is very long in comparison with the edge of cross-section, x is practically o, and we have,

$$a=2, \quad n=-\tfrac{1}{2}, \quad q=0. \quad . \quad . \quad . \quad . \quad . \quad . \quad . \quad (17)$$

Square Flat Disk.—In this case $x=y$, and we have,

$$a=1+2x, \quad n=-\frac{x(2+x)}{1+2x}, \quad q=\frac{x^2}{1+2x} \quad . \quad . \quad . \quad (18)$$

If this grain is very thin x becomes very small and we have nearly,

$$a=1, \quad n=0, \quad q=0. \quad . \quad . \quad . \quad . \quad . \quad . \quad . \quad . \quad (19)$$

Cubical Grains.—In this case $x=y=1$, and the values of the characteristics become,

$$a=3, \quad n=-1, \quad q=\tfrac{1}{3}. \quad . \quad . \quad . \quad . \quad . \quad . \quad . \quad (20)$$

77. Single Perforated Cylindrical Grain of Length Greater than Web.—The initial volume of this grain is

$$v_0=\frac{\pi}{4}(D^2-d^2)L.$$

The volume after a thickness r has burned is

$$v_{0r}=\frac{\pi}{4}[(D-2r)^2-(d+2r)^2](L-2r),$$

Digitized by Google

and volume burned is

$$v_{grb}=\frac{\pi}{4}(D^2-d^2)L-\frac{\pi}{4}[(D-2r)^2-(d+2r)^2](L-2r). \quad . \quad (21)$$

Whence

$$y'=\frac{v_{grb}}{v_0}=1-\frac{[(D-2r)^2-(d+2r)^2](L-2r)}{(D^2-d^2)L}. \quad . \quad . \quad . \quad . \quad . \quad (22)$$

In this grain the web, or least dimension, $w=2R=\frac{D-d}{2}$. With this relation and by placing $x=\frac{w}{L}=\frac{D-d}{2L}$ and $z=\frac{r}{R}$ as before, the preceding equation arranged in ascending powers of z, may be placed in the following form,

$$y'=(1+x)z\left[1-\frac{x}{1+x}z\right]. \quad . \quad . \quad . \quad . \quad . \quad . \quad . \quad (23)$$

We therefore have for this grain,

$$a=1+x, \quad n=-\frac{x}{1+x}, \quad q=0. \quad . \quad . \quad . \quad . \quad (24)$$

If the grain is long compared with its least dimension we have substantially, $x=0$ and

$$a=1, \quad n=0, \quad q=0. \quad . \quad . \quad . \quad . \quad . \quad . \quad . \quad (25)$$

Cylindrical Multiperforated Grains with Seven Cylindrical Perforations.—In this, the principal form of grain used in our service for cannon powder, the form of the grain changes when the web thickness is burned through and the grain divides into 12 prisms of triangular cross-section known as slivers. The following calculations refer only to the burning of the grain before these slivers are formed.

We have for the initial volume,

$$v_0=\frac{\pi}{4}(D^2-7d^2)L.$$

Digitized by Google

After a thickness r is burned the volume becomes,

$$v_{gr}=\frac{\pi}{4}[(D-2r)^2-7(d+2r)^2](L-2r),$$

and the volume burned becomes,

$$v_{grb}=v_g-v_{gr}=\frac{\pi}{4}(D^2-7d^2)L-\frac{\pi}{4}[(D-2r)^2-7(d+2r)^2](L-2r), \quad (26)$$

whence,

$$y'=\frac{v_{grb}}{v_g}=1-\frac{[(D-2r)^2-7(d+2r)^2](L-2r)}{(D^2-7d^2)L}. \quad . \quad . \quad (27)$$

For this grain we have $4w=D-3d$,

$$w=2R=\frac{D-3d}{4}.$$

Making this substitution and placing

$$x=\frac{D}{d}, \quad y=\frac{L}{D} \quad \text{and} \quad z=\frac{r}{R},$$

we have as before,

$$y'=az(1+nz+qz^2). \quad . \quad . \quad . \quad . \quad . \quad . \quad (28)$$

The values of the characteristic are,

$$\left.\begin{aligned} a&=+\frac{(x-3)[2xy(x+7)+(x^2+7)]}{4xy(x^2-7)},\\ n&=+\frac{(x-3)[3xy-(x+7)]}{4xy(x+7)+2(x^2-7)},\\ q&=-\frac{3(x-3)}{16xy(x+7)+8(x^2-7)}. \end{aligned}\right\} \quad . \quad . \quad . \quad . \quad (29)$$

Generalization.—For all practical forms of grains we obtain a similar relation between y' and z; that is, we have in general,

$$y'=\frac{v_{grb}}{v_g}=az(1+nz+qz^2). \quad . \quad . \quad . \quad . \quad . \quad . \quad . \quad (30)$$

Digitized by Google

The value of a is always positive, but the values of n and q may be positive, negative or 0.

The values of the characteristics of the three different forms of grain that we have discussed are given in Tables 9, 11 and 13, at the end of the text.

For each form of grain the characteristics are given for several different values of x and y, that is, for grains having different relative dimensions.

In addition, in Tables 10, 12 and 13 are given the values of y' corresponding to different assumed values of z for grains of various relative dimensions of each form.

These values are worked out from Equation (30), taking the characteristics corresponding to x and y for the given form of grain and assuming values of z from .1 to 1, inclusive. In the case of the multiperforated grain, the formula applies only until $z=1$. In the table for this grain, however, the values of z are carried on until all of the grain is consumed, y' for values of z greater than 1 being worked out by approximate methods.

A curve (Fig. 43) has been constructed showing the values of y' as a function of z for a multiperforated grain for which $x=10$ and $y=2.5$. This is about the average M.P. grain.

78. Burning Surface when a Thickness r is Burned.—From equation (30), we have

$$v_{grb}=v_g az(1+nz+qz^2).$$

Since,

$$s_{gr}=\frac{dv_{grb}}{dr}=\frac{dv_{grb}}{Rdz},$$

we have,

$$s_{gr}=\frac{v_g a}{R}(1+2nz+3qz^2). \quad . \quad . \quad . \quad . \quad . \quad (31)$$

When $z=o$, s_{gr} becomes s_g, the initial surface, and we have,

$$s_g=\frac{v_g a}{R}, \quad . \quad . \quad . \quad . \quad . \quad . \quad . \quad . \quad . \quad (32)$$

Digitized by Google

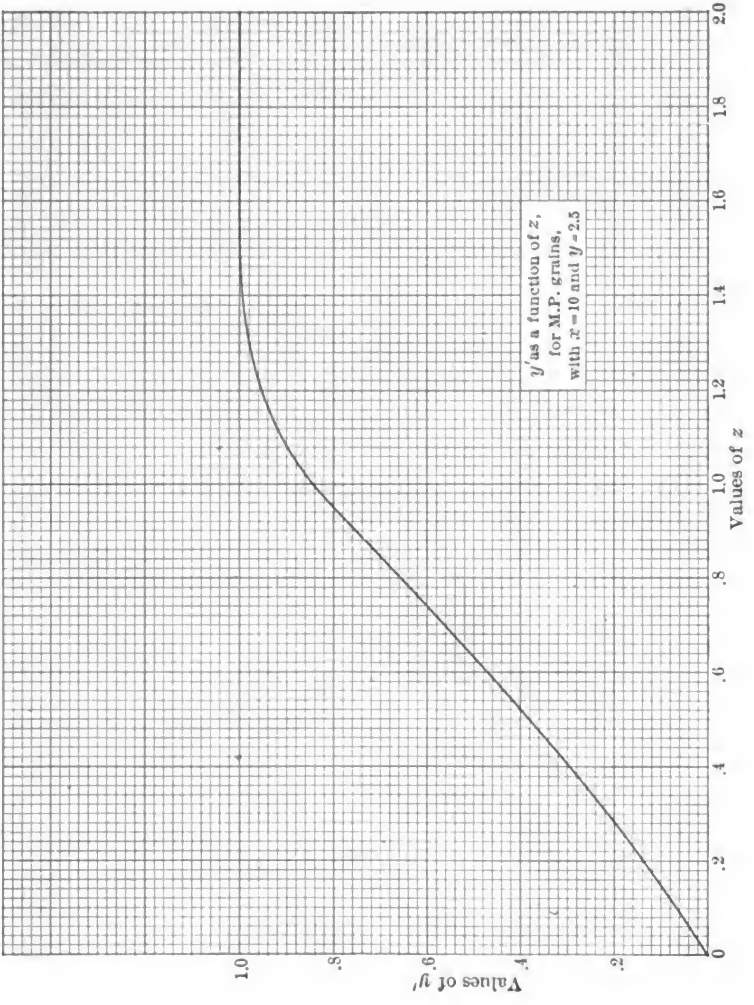

FIG. 43.

Digitized by Google

also since

$$s_p = \frac{27.68 s_g}{\delta v_g}$$

we have,

$$s_p = \frac{27.68 a}{\delta R}. \quad . \quad . \quad . \quad . \quad . \quad . \quad . \quad . \quad (33)$$

The last equation shows that the initial burning surface per pound, for grains that have the same value of a, is inversely proportional to the web.

When $z = 1$, s_{gr} becomes s_{gR}, or the vanishing surface, and we have,

$$s_{gR} = \frac{v_g a}{R}(1 + 2n + 3q). \quad . \quad . \quad . \quad . \quad (34)$$

Progressive and Degressive Granulations.—In the last equation we may have $2n+3q$ less, equal to, or greater than zero. When it is less than 0 the vanishing surface is evidently less the initial surfaces, when it is equal to 0 the vanishing surface is equal to the initial surface, and when it is greater than 0 the vanishing surface is greater than the initial surface.

Granulations of the first kind are said to be degressive, those of the second kind non-progressive and those of the third kind progressive.

Measure of Progressiveness.—Progressiveness is measured by the excess of the vanishing surface over the initial surface expressed in per cent of the initial surface. When the excess is negative the grain is degressive. Letting P_g represent the progressiveness of a grain in per cent we have from a consideration of Eqs. (32) and (34).

$$P_g = 100(2n + 3q). \quad . \quad . \quad . \quad . \quad . \quad . \quad . \quad (35)$$

Trial with the characteristics deduced for prismatic and single perforated cylindrical grains shows that these grains are always degressive. Seven perforated cylindrical grains may be either progressive or degressive, depending upon the values of x and y.

Digitized by Google

Substituting in the above expression the values of n and q Eq. (29), deduced for these grains we obtain as the condition for non-progressiveness,

$$8[3xy-(x+7)]=9. \quad . \quad . \quad . \quad . \quad . \quad . \quad (36)$$

If $x=10$, its usual value for service grains, the value of y from this equation is about 0.6. That is, this multiperforated grain is progressive when its length is greater than about .6 of its outside diameter and degressive when its length is less than .6 of its outside diameter.

79. Burning of Grains of Different Forms.—We may conveniently show the manner of burning of grains of different forms by tabulating the value of y' for value of $z=0$, .2, .4, .6, .8 and 1, for three different forms of grains and noting the changes in y' for the three grains for corresponding changes in z.

The following table for the cubical, single perforated and multiperforated grains is taken from tables 10, 12 and 13, at the end of the book.

z	Cube.		Single Perforated.		Multiperforated.	
	y'	Difference.	y'	Difference.	y'	Difference.
0	.000		.000		.000	
		.488		.216		.148
.2	.488		.216		.148	
		.296		.208		.159
.4	.784		.424		.307	
		.152		.200		.171
.6	.936		.624		.478	
		.056		.192		.181
.8	.992		.816		.659	
		.008		.184		.190
1.0	1.000		1.000		Web .849	
						.849
	Slivers					.151
	Whole grain					1.000

It is seen from the columns of differences that for the first interval the proportional part burned is greatest for the cube and least for the multiperforated cylinder. For succeeding intervals

Digitized by Google

the proportional part burned decreases for the cube and increases for the multiperforated cylinder.

The single perforated cylinder occupies a position between the other two. Of these three forms the multiperforated cylinder, therefore, gives off gas more slowly at the beginning of burning and more rapidly near the end of burning of the web than the other two forms considered. The reason for this is, of course, the increasing burning surface and resultant progressiveness of the multiperforated cylinder.

Other forms of multiperforated grains such as those shown in Fig. 42 are also progressive.

Weight of Charge Burned.—Assuming simultaneous ignition of all the grains, the proportional part of the charge burned is the same as the proportional part, y', of the volume of each grain burned.

Let c represent the total weight of charge;
c_z the weight of charge burned when a proportional part z of the least dimension is burned.

We then have from Eq. (30),

$$c_z = cy' = caz(1+nz+qz^2). \quad . \quad . \quad . \quad . \quad . \quad (37)$$

80. Considerations as to the Best Form of Grain.—The best form of granulation, from a ballistic point of view, is that which, with a given weight of charge, will give to the projectile the highest muzzle velocity, within the limit of maximum pressure for which the gun was designed. To obtain the highest muzzle velocity it is essential that all the powder be burned as soon as possible after the projectile starts moving, that is, that the web thickness of the grains be as small as possible, for we then allow the full weight of the gases to act on the projectile for the longest possible distance. We have shown, however, that for any form of granulation the initial burning surface per pound and, therefore, the initial burning surface of the given charge varies inversely with the web thickness.

Digitized by Google

The maximum pressure developed in a given gun by a charge of a given form of granulation depends upon its initial burning surface and upon the way in which the surface changes as the charge begins to burn. For a given form of granulation there is, therefore, an inferior limit to the thickness of web which we cannot pass without exceeding the limit of maximum pressure in the gun.

Since the initial burning surface of the charge is directly proportional to a, as well as inversely proportional to the web thickness, and since a is very much less for progressive grains, like the multiperforated grain, than for other grains, it is possible to design progressive grains with both a smaller web and a smaller initial surface per pound than other grains.

On account of the increasing burning surface a charge of these grains may in some guns be made to develop the same maximum pressure as an equal charge of other grains, but since the thickness of web is less, the muzzle velocity in these guns will be greater, as stated above.

For these reasons the seven perforated cylindrical grain has been adopted for our service for all calibers which use grains large enough to permit the manufacture of the grain in this form. For smaller calibers, including the .30-caliber rifle, single perforated cylindrical grains are used.

Even in guns in which it is the most suitable the advantage of the multiperforated grain over the single perforated grain is very slight. In some guns the single perforated grain appears to have the advantage ballistically. Both grains are superior to very degressive grains, as the cubical or spherical grain.

Objections to Seven Perforated Cylindrical Grain.—When the web of the seven perforated cylindrical grain is burned through the grain is not all consumed. There still remain to be burned 6 inner and 6 outer pieces of triangular cross section called slivers. The outer slivers are the larger, their total burning thickness being about 0.6 the web thickness of the original grain.

The total weight of slivers is about 15% of the weight of the charge, and since they burn after the projectile has passed some

Digitized by Google

distance down the bore of the gun, the gases resulting from them have a small travel to the muzzle and are, therefore, used inefficiently.

In some guns, especially in the 12″ mortar, with reduced charges the burning of the slivers is so much delayed that some of them are thrown from the muzzle unburned. The two forms of multiperforated grains shown at the right in Fig. 42, were designed to eliminate slivers and to retain the progressive features of the seven perforated cylindrical grain. Tests with both of these forms have given satisfactory results.

Action of Powder in the Gun

81. Distribution of Energy of Powder in the Gun.

Let p = the weight of the projectile in pounds;
p_1 = the weight of the gun and recoiling parts in pounds,
v = the velocity of the projectile in feet per second;
v_1 = the velocity of the gun and recoiling parts;
u = the travel of the projectile in feet, with reference to the gun, when the velocity of the projectile is v;
c_z = the weight of powder burnt in pounds when the velocity of the projectile is v, and its travel with reference to gun is u;
c = the total weight of charge in pounds;
A = area of cross-section of bore in square inches.

We have represented by n' the energy given off on the combustion of 1 lb. of powder.

The energy given off when c_z lbs. of powder are burned is therefore $n'c_z$.

This energy is distributed as follows:

(*a*) Energy of translation of the projectile.
(*b*) Energy of rotation of the projectile.
(*c*) Energy of translation of the gun (recoil).
(*d*) Energy of translation of the unburnt charge and gases. The total weight of the unburnt charge and gases is always that of

Digitized by Google

the original charge and it is assumed as uniformly distributed between the face of the breech block and the base of the projectile.

(*e*) Energy consumed in overcoming the passive resistance of the projectile. This resistance arises from the friction of the projectile against the walls of the bore and of the rotating band against the driving edges of the lands. In the first stages it also arises from the cutting of grooves in the rotating band by the lands. In rifling with increasing twist a resistance is caused by the change in form of these grooves as the projectile moves through the bore.

(*f*) Energy lost as heat to the gun.

(*g*) Energy that remains in the gas as sensible or latent heat. The energy $n'c_s$ must at each instant be equal to the sum of the above energies.

82. Energy of Translation of the Projectile.—This is evidently

$$= \frac{p}{g}\frac{v^2}{2}. \quad . \quad . \quad . \quad . \quad . \quad . \quad . \quad . \quad . \quad (38)$$

Energy of Rotation of the Projectile.—Let ϕ = the mean angle of twist of the rifling. The velocity of rotation of the projectile in radians per second is then $\frac{2v \tan \phi}{d_1}$, where d_1 is the diameter of the bore of the gun in feet. The energy of rotation of the projectile is therefore

$$\frac{p}{g} k_2{}^2 \frac{(2v \tan \phi)^2}{2d_1{}^2} = \frac{p}{g}\left(\frac{2k_2}{d_1}\right)^2 \tan^2 \phi \frac{v^2}{2}, \quad . \quad . \quad . \quad (39)$$

where k_2 is the radius of gyration of the projectile in feet.

The value of $\left(\frac{2k_2}{d_1}\right)^2$ may be assumed as follows, though it varies somewhat for projectiles of different dimensions:

For solid shot	.50
For small cavity shot	.53
For shell	.58

Digitized by Google

Energy of Translation of the Gun.—This energy is evidently

$$=\frac{p_1}{g}\frac{v_1^2}{2}. \quad . \quad . \quad . \quad . \quad . \quad . \quad . \quad . \quad . \quad (40)$$

To get a relation between v_1 and v we shall assume that the gun is recoiling freely, that is, it is not retarded by the carriage. This is nearly so for most carriages while the projectile is in the bore. We also assume that the unburnt charge and gases are uniformly distributed throughout the bore and that their mean velocity in the direction of the projectile is $\frac{v}{2}$.

Equating momenta, neglecting the momentum due to the rotation of the projectile, we then have,

$$\frac{p_1}{g}v_1=\frac{p}{g}v+\frac{1}{2}\frac{c}{g}v, \quad . \quad . \quad . \quad . \quad . \quad . \quad . \quad . \quad (41)$$

or

$$v_1=\frac{2p+c}{2p_1}v=ev. \quad . \quad . \quad . \quad . \quad . \quad . \quad . \quad (42)$$

The energy of translation of the gun therefore becomes

$$=\frac{p_1}{g}e^2\frac{v^2}{2}. \quad . \quad . \quad . \quad . \quad . \quad . \quad . \quad . \quad (43)$$

83. Energy of Translation of the Unburnt Charge and Gases.—The total weight of these is c, and they are assumed uniformly distributed throughout the bore behind the projectile.

Let c_x be the weight of charge and gases between the section of o velocity, considered at the breech of the gun, and a section forward of this whose velocity is v_x. The weight of the latter elementary section is dc_x and its energy is $\frac{dc_x}{g}\frac{v_x^2}{2}$.

Since the charge and gases are assumed as uniformly distributed throughout the bore, we have the relation,

$$\frac{c_x}{c}=\frac{v_x}{v}, \text{ hence } c_x=\frac{cv_x}{v}, \quad . \quad . \quad . \quad . \quad . \quad . \quad . \quad (44)$$

Digitized by Google

and

$$dc_x = \frac{c}{v} dv_x,$$

and the energy of the elementary section considered reduces to

$$\frac{c}{gv} \frac{v_x^2}{2} dv_x.$$

That is

d (energy of motion of weight of charge and gases, c)

$$= \frac{c}{gv} \frac{v_x^2}{2} dv_x. \quad . \quad . \quad . \quad . \quad . \quad . \quad . \quad . \quad (45)$$

Integrating between limits $v_x = 0$ and $v_x = v$, we have,

$$\text{Energy of motion of } c = \frac{c}{3g} \frac{v^2}{2}. \quad . \quad . \quad . \quad . \quad (46)$$

84. Energy Used in Overcoming Passive Resistance.—A number of experiments made at Watertown Arsenal on forcing projectiles through the bores of guns of various calibers, and measuring the resistance encountered indicate:

(*a*) For most guns, the highest resistance occurs at the start, when grooves are being cut in the rotating band by the rifling. The resistance then drops greatly, but generally again increases, rising to a maximum at a travel of two to four calibers and then decreasing rather uniformly to the muzzle.

(*b*) The speeds at which the projectiles were forced through bores were all very low, but an increase of speed seemed to reduce the resistance.

(*c*) Greater width and diameter of band increased the resistance.

(*d*) The starting resistance and mean passive resistance expressed in pounds per square inch on base of projectile both decrease as the caliber increases.

When a gun is fired the driving edges of the lands of the rifling exert a pressure against the edges of the lands left in the rotating

Digitized by Google

band. This pressure produces additional friction which is not produced in slow motion of the projectile through the bore.

The general form of the passive resistance curves obtained from these experiments leads to the belief that the values of the passive resistance in pounds per square inch on base of projectile, may, with small error, be taken for a given charge as at each instant equal to the product of the accelerating pressure in pounds per square inch on the base of projectile by a constant factor. The value of this constant factor will be different for different charges.

Let P_p be the pressure per square inch required to overcome the passive resistance.

The energy lost in foot-pounds by passive resistance over a travel u is therefore $\int P_1 A du$.

85. Total Amount of Energy Converted into Work.—We have thus far considered all of the energies entering the problem in which heat has been converted into mechanical work.

The sum of these energies may be considered as the effect of the action of the mean total pressure P, per square inch, acting on the cross-section of the bore for a distance u, that is, we have the following equation:

$$\int PAdu = \frac{p}{g}\frac{v^2}{2} + \frac{p}{g}\left(\frac{2k_2}{d_1}\right)^2 \tan^2\phi \frac{v^2}{2} + \frac{p_1}{g} e^2 \frac{v^2}{2} + \frac{c}{3g}\frac{v^2}{2} + \int P_p A du. \quad (47)$$

Placing
$$p' = p\left[1 + \left(\frac{2k_2}{d_1}\right)^2 \tan^2\phi\right] + p_1 e^2 + \frac{c}{3}, \quad (48)$$

we have

$$\int PAdu = \frac{p'}{g}\frac{v'}{2} + \int P_1 A du. \quad (49)$$

p' may be called the reduced weight of the projectile.

Let $P_{a'}$ be the mean value of the accelerating pressure at any instant. Then

$$\int P_{a'} A du = \frac{p'}{g}\frac{v^2}{2}, \quad (50)$$

Digitized by Google

and

$$\int PAdu = \int P_{a'}Adu + \int P_pAdu, \quad . \quad . \quad . \quad (51)$$

or

$$P = P_{a'} + P_p. \quad . \quad . \quad . \quad . \quad . \quad . \quad . \quad . \quad (52)$$

In the discussion of passive resistance it was concluded that the value of the pressure required to overcome it could be considered, for any one round, at all times proportional to the accelerating pressure.

We therefore have,

$$P_p = e_pP_{a'}. \quad . \quad . \quad . \quad . \quad . \quad . \quad . \quad . \quad (53)$$

where e_p is a constant to be determined for each round, or

$$\int P_pdu = e_p\int P_{a'}du = e_p\frac{p'}{gA}\frac{v^2}{2}. \quad . \quad . \quad . \quad . \quad (54)$$

which after dividing by U becomes at the muzzle of the gun

$$\frac{\int_{u=0}^{u=v} P_pdu}{U} = e_p\frac{\int_{u=0}^{u=v} P_{a'}du}{U} = e_p\frac{p'V^2}{2gAV}. \quad . \quad . \quad . \quad (55)$$

Placing P_{pm} = the mean value of the passive resistance to the muzzle,

P_{mep} = the mean effective pressure to the muzzle, we have, from Eq. (55),

$$P_{mep} = \frac{p'V^2}{2gAU}, \quad . \quad . \quad . \quad . \quad . \quad . \quad . \quad . \quad (56)$$

and

$$e_p = \frac{P_{pm}}{P_{mep}}, \quad . \quad . \quad . \quad . \quad . \quad . \quad . \quad . \quad (57)$$

where V is the muzzle velocity in feet per second, and

U the total travel of the projectile in feet.

The following table shows the initial pressure P_0 per square inch required to start the projectile and the mean value to the muzzle

Digitized by Google

P_{pm} of the passive resistance for guns of various calibers, assumed in the following calculations:

VALUES OF STARTING PRESSURE AND MEAN PASSIVE RESISTANCE FOR VARIOUS GUNS

Kind of Gun.	P_0.	P_{pm}.
3″ Field	4800	3200
3″ 15-pdr., Seacoast	4800	2450
5″ Seacoast Mod., 1897	5400	2100
6″ Mod., 1908	5300	1960
8″ Mod., 1888	4800	2100
10″ Mod., 1888 and 1895	3850	1800
12″ Mod., 1888 and 1895	3200	1640
14″ Mod., 1907	2860	1475
12″ Mortar Mod., 1890	2500	2600
16″ Mod., 1895	2400	1200

This table was calculated from an empirical formula which reproduced the results obtained in the Watertown Arsenal trials. It applies only to bands whose width is about $\frac{1}{8}$ the caliber of the gun.

For the present wide bands both P_0 and P_{pm} would undoubtedly be higher. It will be shown that an increase of P_0 increases the muzzle velocity, and increase of P_{pm} reduces the muzzle velocity. An increase in both P_0 and P_{pm} by the use of wider bands, may, therefore, not affect the muzzle velocity. It is found in actual practice that the muzzle velocity is very little affected by the use of wider bands.

To calculate e_p it is only necessary to take P_{pm} from the above table, calculate P_{mep} for the gun, and then divide the former by the latter. It will be noted that the calculation of P_{mep} requires a knowledge of the muzzle velocity, not usually at hand. An approximate value can usually be assumed with sufficient accuracy for this purpose. Methods of obtaining such approximate values will be explained later.

Digitized by Google

We may now write the value of $\int PA\,du$ as follows:

$$\int PA\,du = (1+e_p)\frac{p'}{g}\frac{v^2}{2}. \quad \ldots\ldots \quad (58)$$

This value represents the sum of all the energies entering the problem in which heat has been converted into mechanical work, including energy of motion and energy required to overcome passive resistance.

P is here the mean pressure behind the projectile at any instant in pounds per square inch.

u is the corresponding travel of the projectile with reference to the gun, and v is the corresponding actual velocity of the projectile (with reference to a fixed point and not with reference to the gun. The velocity with reference to the gun is $v+v_1=(1+e)v$ as previously explained).

86. Pressures.—To obtain an expression for P we differentiate the above Eq. (58) with respect to t, and obtain

$$PA\frac{du}{dt} = (1+e_p)\frac{p'}{g}v\frac{dv}{dt}, \quad \ldots\ldots \quad (59)$$

but

$$\frac{du}{dt} = v+v_1 = (1+e)v. \quad \ldots\ldots \quad (60)$$

Hence

$$P = \frac{1+e_p}{1+e}\frac{p'}{gA}\frac{dv}{dt}. \quad \ldots\ldots \quad (61)$$

Let P_{at} = the pressure per square inch at the base of the projectile required to give it acceleration of translation;

P_{ar} = the pressure per square inch at the base of the projectile required to give it acceleration of rotation;

P_a = the total accelerating pressure per square inch at the base of the projectile.

We then have

$$P_{at} = \frac{p}{gA}\frac{dv}{dt} \quad \ldots\ldots\ldots \quad (62)$$

Digitized by Google

$\frac{P_{ar}A}{\tan\phi}$ = total pressure tangent to the circumference of the projectile giving it acceleration of rotation.

The angular acceleration of the projectile, assuming a constant value of ϕ, is,

$$\frac{d\left(\frac{2v\tan\phi}{d_1}\right)}{dt}=\frac{2\tan\phi}{d_1}\frac{dv}{dt},$$

and we have the following equation,

$$\frac{1}{2}d_1\frac{P_{ar}A}{\tan\phi}=\frac{p}{g}k_2^2\frac{2\tan\phi}{d_1}\frac{dv}{dt}. \quad . \quad . \quad . \quad . \quad . \quad (63)$$

Hence

$$P_{ar}=\frac{p}{gA}\left(\frac{2k_2}{d_1}\right)^2\tan^2\phi\frac{dv}{dt}, \quad . \quad . \quad . \quad . \quad . \quad (64)$$

and

$$P_a=\frac{p}{gA}\left[1+\left(\frac{2k_2}{d_1}\right)^2\tan^2\phi\right]\frac{dv}{dt}. \quad . \quad . \quad . \quad . \quad (65)$$

Let P_{ab} be the total accelerating pressure per square inch at the breech of the gun. Then

$$P_{ab}=P_a+\frac{c}{2gA}\frac{dv}{dt}. \quad . \quad . \quad . \quad . \quad . \quad . \quad (66)$$

Placing

$$p''=p\left[1+\left(\frac{2k_2}{d_1}\right)^2\tan^2\phi\right]+\frac{c}{2}, \quad . \quad . \quad . \quad . \quad (67)$$

we have

$$P_{ab}=\frac{p''}{gA}\frac{dv}{dt}. \quad . \quad . \quad . \quad . \quad . \quad . \quad . \quad (68)$$

The total pressure at the breech of the gun, including passive resistance, is, therefore, representing it by P_b,

$$P_b=\frac{p''}{gA}\frac{dv}{dt}+\frac{e_p}{1+e}\frac{p'}{gA}\frac{dv}{dt}, \quad . \quad . \quad . \quad . \quad . \quad (69)$$

or

$$P_b=\left[\frac{1+e}{1+e_p}\frac{p''}{p'}+\frac{e_p}{1+e_p}\right]P. \quad . \quad . \quad . \quad . \quad (70)$$

Digitized by Google

87. Energy Lost to the Gun as Heat.—Theoretical computations of this energy give rise to a very complicated function, which, however, varies in much the same way as that obtained to represent the energy expended in overcoming the passive resistance.

This function, obtained by approximate mathematical analysis, is as follows:

$$E_h = Md_1 \frac{(U+l_0)^2}{Vc} \frac{p'}{g} \frac{v^2}{2}, \quad \ldots\ldots (71)$$

in which E_h = the energy lost to the gun as heat in foot-pounds at any instant;

M = a constant whose value is to be determined by experiment;

d_1 = diameter of the bore in feet;

U = length of travel of projectile at the muzzle in feet;

V = muzzle velocity in feet per second;

c = total weight of charge in pounds;

p' = reduced weight of projectile;

v = velocity of the projectile at any instant.

If we place

$$e_h = Md_1 \frac{(U+l_0)^2}{Vc}, \quad \ldots\ldots (72)$$

we have,

$$E_h = e_h \frac{p'}{g} \frac{v^2}{2}. \quad \ldots\ldots (73)$$

The resemblance between this function and that obtained for the energy required for overcoming the passive resistance is apparent.

The expression for the factor e_h indicates that it is in general larger for small guns and low charges and velocities, than for large guns and high charges and velocities.

This result has been confirmed in a general way by tests in guns.

We determined that the sum of all the energy converted

Digitized by Google

into motion or work, including the passive resistance, could be expressed by the function,

$$\int PAdu = (1+e_p)\frac{p'}{g}\frac{v^2}{2}. \quad \text{(See Eq. 58.)}$$

Adding the heat lost to the gun, we have,

$$\int PAdu + E_h = (1+e_p+e_h)\frac{p'}{g}\frac{v^2}{2}. \quad . \quad . \quad . \quad . \quad (74)$$

There is reason for believing that the energy lost to the gun as heat is generally as great, or a little greater, than that required to overcome passive resistance.

If we place $e_h = e_p(1+e_p)$ we have,

$$\int PAdu + E_h = (1+e_p)^2\frac{p'}{g}\frac{v^2}{2}. \quad . \quad . \quad . \quad . \quad (75)$$

This is the expression for the sum of all the energies entering the problem except that remaining in the gas as heat.

88. Reduced Length of Powder Chamber.—For convenience in the following mathematical deductions the volume of the powder chamber is reduced to an equal volume whose cross-section is the same as the cross-section of the bore. The length of this volume is called *the reduced length of the powder chamber.*

Let l_1 represent the reduced length of the powder chamber in feet.

C the volume of the chamber in cubic inches;

A the area of cross-section of the bore in square inches.

Then $C = 12l_1A$,

and

$$l_1 = \frac{C}{12A}. \quad . \quad . \quad . \quad . \quad . \quad . \quad . \quad . \quad . \quad (76)$$

Reduced Length of Initial Air Space.—The air space in the loaded chamber, which includes all the space in the chamber not occupied by solid powder, is also reduced to a volume whose

Digitized by Google

cross-section is that of the bore. The length of this volume is called *the reduced length of the initial air space.*

Let l_0 be the reduced length of the initial air space in feet, and c the weight in pounds of charge loaded in the chamber. Referring to the last equation in Article 52, we have

$$V_s = \text{volume occupied by the powder} = \frac{27.68c}{\delta}.$$

The volume of the initial air space is therefore $C - \frac{27.68c}{\delta}$, and the reduced length of the initial air space in feet

$$l_0 = \frac{C - \frac{27.68c}{\delta}}{12A}. \quad \ldots\ldots\ldots \quad (77)$$

Unless otherwise stated we may take for smokeless powder,

$$\delta = 1.58,$$

and the last equation becomes,

$$l_0 = \frac{C - 17.5c}{12A}. \quad \ldots\ldots\ldots \quad (78)$$

PROBLEMS

1. The volume of the chamber of the 3-inch field gun is 66.5 cu. in. The weight of the charge is 26 oz. Density of the powder 1.56. What is the density of loading, and what is the reduced length of the initial air space?

Ans. $\Delta = 0.6764$,
$l_0 = 5.33$ inches.

2. The reduced length of the initial air space in the 8-inch gun loaded with 80 lbs. of powder, density 1.56, is 43.72 inches. What is the capacity of the chamber? Ans. $C = 3617$ cu. inches.

3. The chamber capacity of the 14-inch gun, model 1910, is 19,323 cu. in. What is the reduced length of the chamber?

4. What is the reduced length of the initial air space of the gun in Problem

Digitized by Google

3, when loaded with 349 lbs. of nitrocellulose powder and 9 pounds of igniting powder? Density of nitrocellulose powder 1.56, and of igniting powder 1.80.

89. Energy Remaining in the Gas at any Instant.—If powder gas were a perfect gas the following equation, using the nomenclature adopted, would represent the relation between pressure, volume, weight and temperature of this gas at any time when a weight c_z of the powder has been burned.

$$PA(u+l_1)=c_zR'T, \quad . \quad . \quad . \quad . \quad . \quad . \quad (79)$$

where, l_1 = reduced length of powder chamber in feet; R' = a constant.

This is simply Eq. (10), Article 38, expressed in different units.

Since powder gas is not a perfect gas it is necessary, as shown in Article 39, to introduce a subtractive term, known as the co-volume, into the expression for the volume. In Article 40 we decided to assume the co-volume of powder gas to be $\frac{1}{1000}$ of the specific volume. For the special case of smokeless powder, however, it is sufficiently accurate to assume the co-volume equal to the volume of the original powder.

The above equation, therefore, becomes,

$$\text{P}[A(u+l_1)-\text{vol. of original charge}]=c_zR'T, \quad . \quad . \quad (80)$$

which is the same as Eq. (19), Article 41, except that the units are different, but

$$Al_1-\text{vol. of original charge}=Al_0,$$

where l_0 = reduced length of initial air space in feet.
Therefore,

$$PA(u+l_0)=c_zR'T. \quad . \quad . \quad . \quad . \quad . \quad . \quad (81)$$

Since
$R'=E(c-c_0)$, this equation may be written,

$$PA(u+l_0)=c_zE(c_p-c_0)T. \quad . \quad . \quad . \quad . \quad . \quad (82)$$

Digitized by Google

Dividing by $(c_p - c_v)$ and multiplying by c_v, and making $k = \frac{p}{c_v} =$ ratio of specific heats, we have,

$$\frac{1}{k-1} PA(u+l_0) = c_z E c_v T. \quad . \quad . \quad . \quad . \quad . \quad (83)$$

This is Eq. (33), Article 45, in different units.

Now $c_z c_v T$ represents the total energy in a weight of gas c_z at the temperature T, under the assumption that c_v the specific heat remains constant.

The second term of (83) and, therefore, the first term must then represent the total energy in foot-pounds, of the gas behind the projectile.

Statement of Equations of Condition for the Problem.—From the preceding discussion we may now write the following equations which state the conditions of the problems to be solved,

$$n' c_z = (1+e_p)^2 \frac{p'}{g} \frac{v^2}{2} + \frac{1}{k-1} PA(u+l_0). \quad . \quad . \quad . \quad (84)$$

$$\frac{dr}{dt} = R \frac{dz}{dt} = k' P. \quad . \quad . \quad . \quad . \quad . \quad . \quad . \quad (85)$$

$$c_z = caz(1+nz+qz^2) = cy'. \quad . \quad . \quad . \quad . \quad . \quad . \quad . \quad (86)$$

The first of these equations (84) pertains to the distribution of the energy, the second (85) to the rate of combustion, and the third (86) to the granulation.

By proper combination and integration of these equations we may eliminate four of the six variables which they contain, and thus express any one of the variables in terms of one other and constants.

90. Determination of Velocity as a Function of z.——We previously obtained,

$$P = \frac{1+e_p}{1+e} \frac{p'}{gA} \frac{dv}{dt'}, \text{ see Eq. (61).}$$

Digitized by Google

Substituting this in Eq. (85),

we have,

$$R\frac{dz}{dt}=\frac{1+e_p}{1+e}k'\frac{p'}{gA}\frac{dv}{dt},$$

or

$$\frac{dv}{dt}=\frac{1+e}{1+e_p}\frac{gAR}{p'k'}\frac{dz}{dt}.$$

Multiplying by dt and integrating between the limits $v=0$, and $v=v$, and the corresponding limits $z=z_0$, and $z=z$, we obtain,

$$v=\frac{1+e}{1+e_p}\frac{gAR}{p'k'}(z-z_0). \quad . \quad . \quad . \quad . \quad . \quad . \quad . \quad (87)$$

Placing

$$H=\frac{(1+e)\,gAR}{p'k'}, \quad . \quad . \quad . \quad . \quad . \quad . \quad . \quad . \quad . \quad (88)$$

we have,

$$v=\frac{H}{1+e_p}(z-z_0). \quad . \quad . \quad . \quad . \quad . \quad . \quad . \quad . \quad (89)$$

z_0 here represents the proportional part of the thickness R burned when the velocity is 0, that is, when the projectile starts.

This equation expresses the relation that the velocity of the projectile in its flight down the bore of the gun is always proportional to the thickness of powder burned after the projectile starts.

Value of z_0.—To determine the value of z_0 we have in Eq. (84), for the instant the pressure becomes high enough to start the projectile, $c_s=cy'_0$, $v=o$, $P=P_0$, $u=o$, and the equation becomes,

$$n'cy'_0=\frac{1}{k-1}P_0Al_0,$$

or

$$y'_0=\frac{1}{k-1}\frac{P_0Al_0}{n'c}, \quad . \quad . \quad . \quad . \quad . \quad . \quad . \quad (90)$$

from which y'_0 is readily calculated.

By reference to Tables 10, 12 and 13 or to the curve of y' as a

Digitized by Google

function of z for the particular granulation under consideration, the value of z_0 corresponding to the calculated value of y_0' is obtained.

91. Experimental Verification of Eq. (89).—If we neglect e, e_p and z_0, which are all small, and place $Rz = r_m$ the thickness burned when the projectile leaves the muzzle, and $v = V$, the muzzle velocity, Eq. (87) may be placed in the following form:

$$k' = \frac{gAr_m}{p'V}. \quad \ldots\ldots\ldots \quad (91)$$

Now, if one or two grains of powder larger than those composing the charge are loaded with the latter they will, upon firing, be thrown from the muzzle of the gun only partly consumed.

Measurement of these test grains before and after firing will give the value of r_m in Eq. (91). Measurement of the muzzle velocity will give V. From the known values of p', A, etc., the value of k' can, therefore, be calculated from Eq. (91). From Eq. (6), it is seen that this value depends upon the powder alone being constant for any particular lot of powder. Therefore if the test grains have the same value of k' as determined from Eq. (6), the second member of Eq. (91) should be constant, whatever the gun in which they were fired and whatever the muzzle velocity obtained.

The following table shows the muzzle velocities and values of r_m in three guns in which test grains of the same lot were placed with the charges:

Gun.	V measured	r measured	k' by Eq. (91)
3″ Field Gun	1700	.01916	.0001727
3″ Field Gun	1885	.02012	.0001612
3″ Field Gun	1703	.01747	.0001565
7″ Howitzer	1081	.01755	.0001915
3″.8 Howitzer	893	.01155	.0001577

Digitized by Google

The values of k' while not exactly constant are near enough so to justify the assumption of $\phi = 1$ in Eq. (7) which was made in obtaining Eq. (85).

92. Differential Equation of Travel as a Function of z. We have,

$$P = \frac{R}{k'}\frac{dz}{dt} = \frac{R}{k'}\frac{dz}{du}\frac{du}{dt} = \frac{(1+e)^2}{1+e_p}\frac{gAR^2}{p'k'^2}(z-z_0)\frac{dz}{du}. \quad . \quad . \quad (92)$$

and

$$(1+e_p)^2\frac{p'}{g}\frac{v^2}{2} = (1+e)^2\frac{gA^2R^2}{2p'k'^2}(z-z_0)^2.$$

Our energy Eq. (84), may therefore be written,

$$n'cy' = (1+e)^2\frac{gA^2R^2}{2p'k'^2}(z-z_0)^2 + \frac{1}{k-1}\frac{(1+e)^2}{1+e_p}\frac{gA^2R^2}{p'k'^2}(z-z_0)(u+l_0)\frac{dz}{du}. \quad (93)$$

Dividing by $(1+e)^2\frac{gA^2R^2}{2p'k'^2}$, the equation becomes,

$$\frac{2n'k'^2p'cy'}{(1+e)^2gA^2R^2} - (z-z_0)^2 = \frac{2}{k-1}\frac{1}{1+e_p}(z-z_0)(u+l_0)\frac{dz}{du}. \quad . \quad (94)$$

Placing $$B = \frac{2n'k'^2p'c}{(1+e)^2gA^2R^2}, \quad . \quad . \quad . \quad . \quad . \quad . \quad (95)$$

and dividing by $(z-z_0)dz$, we have,

$$\frac{By' - (z-z_0)^2}{(z-z_0)dz} = \frac{2}{k-1}\frac{1}{1+e_p}\frac{u+l_0}{du}, \quad . \quad . \quad . \quad . \quad (96)$$

or taking reciprocals of both members and reducing,

$$\frac{du}{u+l_0} = \frac{2}{(k-1)(1+e_p)}\frac{(z-z_0)dz}{By' - (z-z_0)^2}. \quad . \quad . \quad . \quad (97)$$

93. Determination of Travel During Time Powder is Burning.— The general value of y' given by Eq. (30) is,

$$y' = az(1+nz+qz^2). \quad . \quad . \quad . \quad . \quad . \quad . \quad (30)$$

Digitized by Google

For single perforated cylindrical grains, q is o, and for other forms of grain in use q is small. We shall therefore neglect q, and write the equation,

$$y' = az(1+nz). \quad \ldots\ldots \quad (98)$$

Substituting this value of y' in Eq. (97), rearranging and placing,

$$J = \frac{1}{Ban-1}, \quad \ldots\ldots \quad (99)$$

$$K = -\frac{Ba+2z_0}{Ban-1}, \quad \ldots\ldots \quad (100)$$

and indicating the integration, we have

$$\int_{u=o}^{u=u} \frac{du}{u+l_0} = \frac{2}{(k-1)(1+e_p)} \int_{z=z_0}^{z=z<1} \frac{J(z-z_0)dz}{z^2-Kz-Jz_0^2}. \quad (101)$$

Placing the denominator under the integral sign of the second member equal to $(X-z)(Y-z)$, where X and Y are roots of the equation $z^2-Kz-Jz_0^2=0$, we may place Eq. (101) in the following readily integrable form,

$$\int_{u=o}^{u=u} \frac{du}{u+l_0} = \frac{2}{(k-1)(1+e_p)} \int_{z=z_0}^{z=z<1} \frac{Mdz}{X-z} + \frac{Ndz}{Y-z}, \quad (102)$$

in which,

$$X = \frac{K}{2} + \sqrt{\frac{K^2}{4} - Jz_0^2}, \quad \ldots\ldots \quad (103)$$

$$Y = \frac{K}{2} - \sqrt{\frac{K^2}{4} - Jz_0^2}, \quad \ldots\ldots \quad (104)$$

$$M = \frac{J(z_0-X)}{X-Y}, \quad \ldots\ldots \quad (105)$$

$$N = \frac{J(Y-z_0)}{X-Y}. \quad \ldots\ldots \quad (106)$$

Digitized by Google

Performing the integration we obtain,

$$\frac{u+l_0}{l_0}=\left(\frac{X-z_0}{X-z}\right)^{\frac{2M}{(k-1)(1+e_p)}}\left(\frac{Y-z_0}{Y-z}\right)^{\frac{2N}{(k-1)(1+e_p)}} \quad . \quad (107)$$

94. Discussion of Eq. (107).—The quantities J, K, M, N, X and Y are constants for any one round. Their values are given by Eqs. (99), (100), (103), (104), (105) and (106). These values substituted in Eq. (107), together with any value of z equal to or less than 1, will give the value of $\frac{u+l_0}{l_0}$ corresponding to the value of z selected. Having determined the value of $\frac{u+l_0}{l_0}$, we solve for u and thus obtain the travel of the projectile corresponding to the value of z selected. The velocity for the same value of z is determined from Eq. (89). We have thus determined the velocity and the corresponding travel and by doing the same thing for several different values of z and plotting the results we obtain the velocity curve along the bore of the gun.

It must be remembered that Eq. (107) is true only for values of z equal to or less than 1 since we have assumed the law of burning given by Eq. (98), which is not true for values of z greater than 1. When on substituting 1 for z in Eq. (107), the resulting value of $\frac{u+l_0}{l_0}$ is greater than its value at the muzzle of the gun, we know that the powder is not all consumed in the gun, and that the assumed law of burning holds throughout the time the projectile is in the bore. By substituting smaller values of z and plotting the corresponding values of $\frac{u+l_0}{l_0}$, as functions of z, we may determine the value of z, which corresponds to the value of $\frac{u+l_0}{l_0}$, at the muzzle of the gun. This value of z in Eq. (89) will give the muzzle velocity.

Digitized by Google

If the substitution of 1 for z in Eq. (107) gives a value of $\frac{u+l_0}{l_0}$, less than its value at the muzzle of the gun, we know that all the powder is burned inside the gun. In this case Eqs. (107) and (89) cannot be used to determine the muzzle velocity. Eq. (107) is, therefore, of use in determining muzzle velocities only in the case of slow powders.

The term e_p defined by Eq. (57), must be known before we can solve Eq. (107), but its numerical determination requires a knowledge of the approximate muzzle velocity. We might neglect e_p in Eq. (107), determine the value of z corresponding to $\frac{u+l_0}{l_0}$ at the muzzle and then determine the muzzle velocity from Eq. (89). This approximate muzzle velocity could then be used in Eq. (56) to determine e_p.

An easier method of determining the trial muzzle velocity is as follows: Making $z_0=o$ and $e_p=o$ in Eq. (107), we have, $X=K$, $Y=0$, $M=-J$, $N=0$ and the equation becomes

$$\frac{u+l_0}{l_0}=\left(\frac{K}{K-z}\right)^{-\frac{2J}{k-1}}, \quad . \quad . \quad . \quad . \quad . \quad . \quad . \quad (108)$$

If on the substitution of 1 for z in this equation the value of $\frac{u+l_0}{l_0}$ is equal to or greater than the value at the muzzle of the gun, the equation is applicable at the muzzle. Eliminating z by Eq. (89) in which z_0 and e_p are also assumed o.

$$V=HK\left[1-\left(\frac{l_0}{u+l_0}\right)^{-\frac{k-1}{2J}}\right]. \quad . \quad . \quad . \quad . \quad . \quad (109)$$

Substituting the value of U at the muzzle we obtain an approximate or trial muzzle velocity which may be used in Eq. (57) for the determination of e_p for use in Eq. (107).

95. Determination of Travel after Powder is all Burned.—When

Digitized by Google

$z \gtrless 1$, the powder is all burned except when the grains contain slivers. y', therefore, becomes 1 with the same exception. Under this condition the total integral of Eq. (97) may be indicated as follows:

$$\int_{u=o}^{u=u} \frac{du}{u+l_0} = \int_{z=o}^{z=1} \frac{J(z-z_0)dz}{z^2-Kz-Jz_0^2} + \int_{z=1}^{z=z>1} \frac{(z-z_0)dz}{B-(z-z_0)^2}. \quad (110)$$

The integral of the first term of the second member is equal to the second member of Eq. (107) if z is made equal to 1 in that equation. Performing the integration of the second term of the second member and reducing, we obtain,

$$\frac{u+l_0}{l_0} = \left(\frac{X-z_0}{X-1}\right)^{\frac{2M}{(k-1)(1+e_p)}} \left(\frac{Y-z_0}{Y-1}\right)^{\frac{2N}{(k-1)(1+e_p)}} \left(\frac{B-(1-z_0)^2}{B-(z-z_0)^2}\right)^{\frac{1}{(k-1)(1+e_p)}}. \quad (111)$$

Muzzle Velocity.—The last equation is to be used for the determination of $\frac{u+l_0}{l_0}$ for values of z equal to or greater than 1. If $z=1$ in Eq. (107) gives a value of $\frac{u+l_0}{l_0}$ less than its value at the muzzle of the gun we know that the powder is all burned in the gun. If we then substitute values of $z>1$ in Eq. (111) and plot the resulting values of $\frac{u+l_0}{l_0}$ we may determine the value of z corresponding to the value of $\frac{u+l_0}{l_0}$ at the muzzle. This value in Eq. (89) will give the muzzle velocity, or combining Eqs. (111) and (89) and eliminating z, we obtain,

$$v^2 = \frac{BH^2}{(1+e_p)^2}\left[1 - \left(\frac{l_0}{u+l_0}\right)^{(k-1)(1+e_p)} \left(\frac{X-z_0}{X-1}\right)^{2M} \left(\frac{Y-z_0}{Y-1}\right)^{2N} \left(\frac{B-(1-z_0)^2}{B}\right)\right]. \quad (112)$$

Digitized by Google

If z_0 and e_p are o we have, as before, $X=K$, $Y=o$, $M=-J$, $N=o$, and the equation becomes,

$$v^2=BH^2\left[1-\left(\frac{l_0}{u+l_0}\right)^{k-1}\left(\frac{K}{K-1}\right)^{-2J}\left(\frac{B-1}{B}\right)\right]. \quad . \quad (113)$$

which will serve to determine the approximate muzzle velocity for use in determination of e_p in Eq. (112).

It is thus seen that Eq. (107) with (89) is to be used for determining velocities along the bore when $z \gtreqless 1$. Eqs. (107) or (108) give the corresponding travel. These equations, or Eq. (109) are applicable for the determination of muzzle velocity only when the substitution of 1 for z in Eqs. (107) or (108) gives a value of $\frac{u+l_0}{l_0}$ greater than its value at the muzzle of the gun. Eqs. (112) or (113) are to be used for determining velocities along the bore for values of $z>1$.

These equations are application for the determination of muzzle velocity only when the substitution of 1 for z in Eqs. (107) or (108) gives a value of $\frac{u+l_0}{l_0}$ less than its value at the muzzle of the gun.

96. Special case of multiperforated cylindrical grains.—These grains differ from all others in that they are not completely consumed when $z=1$, but the burning continues under a law different from that which holds when $z \gtreqless 1$ until z reaches a value of about 1.6 when the grains are completely consumed. Eq. (107) is approximately correct for these grains for values of $z \gtreqless 1$, the only error arising from the neglect of the characteristic q.

The law of burning for the slivers, that is, for values of z between 1 and about 1.6, may be approximately represented by Eq. (98), providing we substitute for a and n other characteristics a_1 and n_1, whose values are different from a and n. Eq. (98) therefore becomes,

$$y'=a_1z(1+n_1z). \quad . \quad . \quad . \quad . \quad . \quad . \quad (114)$$

Digitized by Google

For m. p. grains of ordinary dimensions the values of the characteristics of the slivers may be taken,

$$a_1 = 1.2,$$
$$n_1 = -.30.$$

Using the new characteristics, the values of the constants given by Eqs. (99), (100), (103), (104), (105) and (106) become J_1, K_1, X_1, Y_1, M_1 and N_1. The effect produced by the slivers is now obtained by integration of the second member of Eq. (101), with the new values of the constants between the limits $z=1$ and $z=1.6$.

The final total integral is,

$$\frac{u+l_0}{l_0} = \left(\frac{X-z_0}{X-1}\right)^{\frac{2M}{(k-1)(1+e_p)}} \left(\frac{Y-z_0}{Y-1}\right)^{\frac{2N}{(k-1)(1+e_p)}} \left(\frac{X_1-1}{X_1-1.6}\right)^{\frac{2M_1}{(k-1)(1+e_p)}} \cdot \left(\frac{Y_1-1}{Y_1-1.6}\right)^{\frac{2N_1}{(k-1)(1+e_p)}} \left(\frac{B-(1.6-z_0)^2}{B-(z-z_0)^2}\right)^{\frac{1}{(k-1)(1+e_p)}} \quad . \quad . \quad (115)$$

For values of $z \lessgtr 1$ we neglect the last three terms and substitute z for 1 in the denominations of the first two terms. The equation then becomes the same as (107). For values of z between 1 and 1.6 we neglect the last term and substitute z for 1.6 in the 3d and 4th terms.

Muzzle Velocity.—For values of $z>1.6$ we use the entire formula. If the product of the first four terms as they stand gives a value of $\frac{u+l_0}{l_0}$ less than its value at the muzzle of the gun we must use the entire formula in determining z at the muzzle. In this case, combining it with Eq. (89) and eliminating z, we obtain,

$$v^2 = \frac{BH^2}{(1+e_p)^2}\left[1-\left(\frac{l_0}{u+l_0}\right)^{(k-1)(1+e_p)} \left(\frac{X-z_0}{X-1}\right)^{2M} \left(\frac{Y-z_0}{Y-1}\right)^{2N} \left(\frac{X_1-1}{X_1-1.6}\right)^{2M_1} \left(\frac{Y_1-1}{Y_1-1.6}\right)^{2N_1} \left(\frac{B-(1.6-z_0)^2}{B}\right)\right]. \quad . \quad (116)$$

Digitized by Google

or, making $z_0 = o$ and $e_p = o$, we obtain for the trial velocity,

$$v^2 = BH^2\left[1 - \left(\frac{l_0}{u+l_0}\right)^{k-1}\left(\frac{K}{K-1}\right)^{-2J}\left(\frac{K_1-1}{K_1-1.6}\right)^{-2J}\left(\frac{B-2.56}{B}\right)\right]. \quad (117)$$

97. Le Duc's Formulas.—If in Eq. (109) we make

$$-\frac{k-1}{2J} = 1, \quad . \quad . \quad . \quad . \quad . \quad . \quad . \quad . \quad (118)$$

we have, placing k equal to its value, 1.30, J equal to its value given by Eq. (99), and solving for n,

$$n = -\frac{5.67}{Ba}, \quad . \quad . \quad . \quad . \quad . \quad . \quad . \quad . \quad (119)$$

from which it is seen that the value of n, to satisfy Eq. (118), will be negative; that is, the powder will be degressive.

Making the substitution of (118) in (109), we obtain,

$$v = \frac{HKu}{u+l_0}. \quad . \quad . \quad . \quad . \quad . \quad . \quad . \quad . \quad (120)$$

This is known as Le Duc's formula for velocity in the bore of a gun. It is not true except when the condition stated in Eq. (118) and those assumed in Eq. (109) are met.

These conditions require a slow degressive powder.

Placing $a' = HK$ and $b' = l_0$, Le Duc's formula assumes the form

$$v = \frac{a'u}{b'+u}. \quad . \quad . \quad . \quad . \quad . \quad . \quad . \quad . \quad (121)$$

Differentiating this formula with respect to u and remembering that

$$P = \frac{p'}{gA} v \frac{dv}{du},$$

we obtain,

$$P = \frac{p'}{gA} \frac{a'^2 b' u}{(b'+u)^3}, \quad . \quad . \quad . \quad . \quad . \quad . \quad (122)$$

Digitized by Google

of which the maximum value occurs when $u=\frac{1}{2}b'$ and is

$$P_{max}=\frac{4b'}{27gA}\frac{a'^2}{b}. \quad \ldots\ldots\ldots \quad (123)$$

In the form given in Eqs. (121), (122), and (123), Le Duc's formulas have long been used as empirical formulas for the determination of velocity and pressure along the bore of a gun when the muzzle velocity and maximum pressure were measured. By substituting the measured muzzle velocity in Eq. (121) and the measured maximum pressure in Eq. (123), we obtain two equations involving a' and b' from which their values may be determined. These values in Eqs. (121) and (122) will give the velocity and pressure for any assumed value of u.

Le Duc's formulas are the simplest of all interior ballistic formulas and when used in the manner indicated are sufficiently accurate for predicting the pressure to be expected along the bore of a gun with a view to designing the walls to withstand that pressure.

98. Graphical Method of Integration of Eq. (97).—Except for single perforated cylindrical grains a slight error exists in the preceding formulas due to q in Eq. (30) being neglected. For multiperforated cylindrical grains a further slight error exists due to the approximate law assumed for the burning of the slivers.

If it is desired to calculate the travel and velocity at several points of the bore the solution of the preceding equations involves considerable labor, especially when multiperforated cylindrical grains are used.

For these reasons the formulas in Articles 93 to 96, inclusive, are used only for the determination of muzzle velocities when the tests show Eqs. (112) or (116), or the approximate Eqs. (113) or (117), to be applicable.

The integrated equations are also useful in determining the effect produced on the muzzle velocity by varying any one of the many elements entering its value as given by the formulas.

Velocities and travels along the bore or muzzle velocities

Digitized by Google

when the tests show the equations enumerated above not to be applicable are best determined by graphical integration of Eq. (97). For this purpose the integration of the equation may be expressed in the following form:

$$\log \frac{u+l_0}{l_0} = \frac{.8686}{(k-1)(1+e_p)} \int_{z=z_0}^{z=z} \frac{z-z_0}{By'-(z-z_0)^2}\, dz. \quad . \quad (124)$$

The factor .4343 is introduced to make the change from Napierian to common logarithms.

To integrate we calculate the value of $\frac{z-z_0}{By'-(z-z_0)^2}$ for values of $z=0.2$, 0.4, 0.6, 0.8, 1.0, 1.1, 1.2, 1.4, 1.6, 1.8, 2.0, 2.2, 2.4, etc., taking the values of y' for this purpose from Tables 10, 12 or 13 corresponding to the granulation of powder and the values of z used.

The values of $\frac{z-z_0}{By'-(z-z_0)^2}$ when plotted as a function of z will form a curve, which, with the ordinate corresponding to any value of z and the axis of abscissas, will enclose an area equal to the integral of the expression under the integral sign for that value of z as a limit. The area multiplied by the constant coefficient $\frac{.8686}{(k-1)(1+e_p)}$ will give the value of $\log \frac{u+l_0}{l_0}$ corresponding to the value of z selected.

From this result the value of u is readily calculated. The corresponding value of v is calculated from Eq. (89).

The graphical method is applicable to any form of granulation.

99. Determination of Pressure.—We have from Eq. (92),

$$P = \frac{(1+e)^2}{1+e_p} \frac{gAR^2}{p'k'^2} (z-z_0) \frac{dz}{du},$$

and from Eq. (97),

$$(z-z_0)\frac{dz}{du} = (1+e_p)\frac{k-1}{2}\frac{By'-(z-z_0)^2}{u+l_0}.$$

Digitized by Google

Combining these two equations, we have,

$$P=\frac{(1+e)^2gAR^2(k-1)}{2p'k'^2}\,\frac{By'-(z-z_0)^2}{u+l_0}. \quad . \quad . \quad . \quad (125)$$

Placing

$$G=\frac{(1+e)^2gAR^2(k-1)}{2p'k'^2}, \quad . \quad . \quad . \quad . \quad . \quad . \quad . \quad . \quad (126)$$

we have,

$$P=G\frac{By'-(z-z_0)^2}{u+l_0}, \quad . \quad . \quad . \quad . \quad . \quad . \quad . \quad . \quad (127)$$

Having determined from Eqs. (107) or (124) the value of $u+l_0$ corresponding to an assumed value of z, the value of P corresponding to the same value of z is readily determined by Eq. (127). To determine the value of the maximum pressure plot the values of P as a function of z or u. The resulting curve readily gives the value and position of the maximum pressure. The maximum pressure thus determined is the maximum value of the mean pressure P, and is about midway between the value of the maximum pressure at the breech of the gun and that on the base of the projectile.

The pressure at the breech of the gun may be obtained from the mean pressure by Eq. (70).

Gauge Maximum Pressure.—The maximum pressures determined as described in the preceding article are always higher than those obtained by direct experiments with crusher gauges. In the case of quick powders the difference between the maximum pressures obtained by the formulas and those obtained by the crusher gauge is greater than in the case of slow powders.

The copper cylinder of the crusher gauge seems to require a longer time under compression, to enable it to register the full pressure upon it, than is allowed by the extremely short time the high powder pressures act. As the high pressures with quick powder act for a shorter length of time than with slow powders, they should, therefore, produce a relatively less compression of the copper cylinder.

Digitized by Google

Since measurement by the crusher gauge is the accepted method of obtaining and comparing maximum pressures in guns, it becomes necessary, in order to make the formulas of interior ballistics of value, to have some method by which gauge maximum pressures may be predicted from the values of P determined by the formulas. Representing the measured gauge maximum pressure by $P_{g\,max}$ and the maximum pressure obtained from Eq. (127) by P_{max}, the following formula, worked out by comparing the former with the latter in a large number of rounds, will reproduce the gauge maximum pressure with fair accuracy.

$$P_{g\,max} = \frac{P_{max} + 120\sqrt{\frac{v}{u}_{(P\,max)}}}{1 + .02\sqrt{\frac{v}{u}_{(P\,max)}}} \quad . \quad . \quad . \quad . \quad . \quad (128)$$

The values of v, u and P_{max} having been determined by the preceding formulas, the value of the gauge maximum pressure may be readily determined.

Application of the Formulas

100. Data on Form A.—For convenience in calculations the data necessary for the determination of travel and velocity curves for a given charge in any gun is arranged as shown on Form A.

The nomenclature used on this form is the same as has been used throughout this chapter. Number of equation used or article in which subject is discussed is placed after each term requiring calculation.

Special explanation is required only for the items that follow.

Under c is placed the weight of smokeless powder used in pounds. Under "Igniter" is placed the weight of black igniter powder used, also in pounds. Total c is the sum of the two preceding weights. "Equivalent smokeless c" is the weight of smokeless powder used plus half the weight of black powder igniter.

Digitized by Google

FORM A GUN..... POWDER.....

POWDER CONSTANTS

$c=$	lbs.	Web $=$	ins.	
Igniter $=$	lbs.	$R=$	ins.	
Total $c=$	lbs.	$k=1.3$		
Eq. Smokeless $c=$	lbs.	M. & V. water $=$	%	Art. 73
$x=\frac{D}{d}=$	M. P. grains	M. & V. alcohol $=$	%	Art. 73
$y=\frac{L}{D}=$	M. P. grains	Stabilizer $=$	%	Art. 73
$x=\frac{w}{L}=$	S. P. grains	$n'=$	ft. lbs. per lb.	Eq. (5) and Art. 73
Art. 77		$k'=$	ins. per sec.	Eq. (6)

GUN, PROJECTILE AND GENERAL CONSTANTS

$C=$	cu. ins.	$p\left[1+\left(\frac{2k_2^2}{d_1}\right)\tan^2\phi\right]=$	lbs.	Art. 85
$17.5\,c=$	cu. in.	$p_1e^2=$	lbs.	Art. 85
Air space $=$	cu. in.	$\frac{3}{c}=$	lbs.	Art. 85
$A=$	sq. in.	$p'=$	lbs.	Art. 85
$l_0=$	feet	$P_0=$	lbs. per sq. in.	Art. 85
$U=$	feet	$P_{pm}=$	lbs. per sq. in.	Art. 85
$\frac{U+l_0}{l_0}=$		$y'_0=\frac{3.33P_0Al_0}{n'c}=$		Eq. (90)
$\log\frac{U+l_0}{l_0}=$		$z_0=$		Art. 90
Average $\tan\phi=$		$B=\frac{2n'k'^2p'c}{(1+e)^2gA^2R^2}=$		Eq. (95)
$\left(\frac{2k_2}{d_1}\right)^2=$	Art. 82	$H=\frac{(1+e)gAR}{p'k'}=$		Eq. (88)
$d=$	lbs.	$G=\frac{(1+e)^2gAR^2(k-1)}{2p'k'^2}=$		Eq. (126)
$p_1=$	lbs.			
$e=\frac{2p+c}{2p_1}=$	Eq. (42)			

FORMULAS

$$v=\frac{H}{1+e_p}(z-z_0) \qquad \text{Eq. (89)}$$

$$\log\frac{u+l_0}{l_0}=\frac{2.895}{1+e_p}\int\frac{z-z_0}{By'-(z-z_0)^2}\,dz. \qquad \text{Eq. (124)}$$

$$P=G\frac{By'-(z-z_0)^2}{u+l_0} \qquad \text{Eq. (127)}$$

$$P_{g\,max}=\frac{P_{max}+120\sqrt{\frac{v}{u_{(P_{max})}}}}{1+.02\sqrt{\frac{v}{u_{(P_{max})}}}} \qquad \text{Eq. (128)}$$

NOTE.—The above formulas are to be used for determining velocities, travels and pressures by the graphical method of integration given in detail on Form B.

To determine muzzle velocities for quick powders by the integrated formulas use Eqs. (113) for trial and (112) for muzzle velocities for grains without slivers and Eqs. (117) for trial and (116) for muzzle velocities for grains with slivers.

Digitized by Google

In determining l_0 we assume, as in Eq. (78), that one pound of solid powder occupies 17.5 cu.in.; 17.5 c therefore represents the space occupied by the charge. The value of c to be used here is the "total c," including all of the igniter. By subtracting 17.5 c from the volume of the chamber we obtain the volume of the air space in cubic inches.

Dividing this by A and by 12, we get l_0 in feet.

$\frac{U+l_0}{l_0}$ and $\log \frac{U+l_0}{l_0}$ are now readily calculated.

Average tan ϕ is π divided by the average number of calibers length in which the rifling makes one complete turn. For instance, if the rifling makes one turn in 50 calibers at the start, and one turn in 25 calibers at the muzzle, average tan $\phi = \frac{\pi}{37.5}$.

p' is the sum of the three values given above it on the form.

"Total c" is to be used in calculating y_0'. "Equivalent smokeless c" is to be used in calculating B.

B, H and G are worked out from the formulas given on the form, all the factors of which are now known.

The formulas given at the bottom of Form A are those used in making the calculations on Form B.

101. Calculations on Form B.— The data and calculations on this form shown below are those required for the graphical integration of Eq. (124). They are arranged in numbered lines as follows:

First Line.—The assumed values of z. As will appear later it is most convenient to assume values of z two-tenths apart beginning with .2 and continuing as far as may be necessary for the solution of the problem. The value 1.1 is also used for a reason that will appear later.

Second Line.—The values of y' corresponding to the assumed values of z. These values are taken from the one of Tables X, XII or XIII which corresponds most closely to the granulation of the powder used. Thus, if for a given m.p. grain $x=8.59$ and $y=2.35$, the values y' corresponding to the different assumed

Digitized by Google

FORM B

GUN.....

POWDER.....

	Trial	Actual
1. s.		
2. y'		
3. By'		
4. $(s-s_0)^2$		
5. $By'-(s-s_0)^2$		
6. $s-s_0$		
7. $\frac{s-s_0}{By'-(s-s_0)^2}$		
8. Cal. of area under curve.		
9. Log $\frac{u+l_0}{l_0}(e_p=0)$		
10. $V(e_p=0)$		
1. Calculation of e_p and vel. and travel factors.	$P_{mcp}=\frac{p'V^2}{2gAU}=$ $e_p=\frac{P_{pm}}{P_{mcp}}=$ Travel factor $=\frac{2.895}{1+e_p}=$ Vel. factor $=\frac{H}{1+e_p}=$	
12. Log $\frac{u+l_0}{l_0}$		
13. $\frac{u+l_0}{l_0}$		
14. $u+l_0$		
15. u		
16. v		
17. P		
18. Gauge Max. P		
19.		
20.		

Digitized by Google

values of z are taken from Table XII under the heading $x=9$ and $y=2.5$.

For all grains without slivers $y'=1$ for $z=$ or >1. For m.p. grains $y'=1$, for all values of z equal to or greater than the values corresponding to $y'=1$ given in Table XII.

Third Line.—The numbers in this line are the products of the corresponding numbers in the second line, by B, whose value is given in Form A.

Fourth Line.—The numbers in this line are the squares of the corresponding numbers in the sixth line below.

Fifth Line.—The numbers in this line are obtained by subtracting those in the fourth line from the corresponding ones in the third line.

Sixth Line.—This line is obtained by successively subtracting z_0 whose value was determined on Form A from the numbers in the first line.

Seventh Line.—The numbers in this line are the quotients obtained by dividing the numbers in the sixth line by the corresponding ones in the fifth line. By reference to Eq. (124), it is seen that these numbers are the successive values of the coefficient of dz in that equation.

Eighth Line.—If the numbers in the seventh line are plotted as ordinates with the corresponding values of z, or numbers in the first line as abscissas, and a curve is drawn through the plotted points, the value of the integral expression in Eq. (124) will be the area under this curve from the point where it cuts the axis of abscissas to the ordinate corresponding to any desired value of z.

Except for values of z near z_0 and between 1 and 1.2 the curve will be so nearly a straight line between successive values of z that the area between successive ordinates may be obtained by taking their mean value and multiplying by the distance between them. If the ordinates are taken .2 apart we need therefore only add the ordinates and divide by 10. If the ordinates are taken .1 apart we add them and divide by 20. The advantage of taking the ordinates .2 apart is thus apparent. However, we take the

Digitized by Google

ordinates 1.0, 1.1 and 1.2 one-tenth apart, for the reason that the curve has considerable curvature at this point, and taking the ordinates closer together results in greater accuracy.

To obtain the area up to the first assumed value of z we multiply the number in the sixth line by the number in the seventh line corresponding to this value of z and take $\frac{2}{3}$ of the product. This is equivalent to assuming that this part of the curve is a parabola. The area under the next value of z is then obtained by addition to the preceding area of $\frac{1}{10}$ of the numbers in the seventh line corresponding to this and the preceding value of z and so on to the last value of z except that for $z=1.1$ and 1.2 we add $\frac{1}{20}$ of the last two numbers in the seventh line.

Ninth Line.—This line is obtained by multiplying the numbers in the eighth line by $\frac{.8686}{k-1}$, which is what the constant coefficient in Eq. (124) becomes when $e_p=0$. It will be necessary to determine only two values in the ninth line, one less and one greater than $\log \frac{U+l_0}{l_0}$ determined on Form A.

The value of z corresponding to $\log \frac{U+l_0}{l}$ is then determined by interpolation between the values of z corresponding to the two values determined in the ninth line and is placed in the first line of the column headed "Trial." This value is the proportional part of the web of the grain that would have been burned in the gun providing e_p were 0, that is providing there were no passive resistance.

Tenth Line.—Only one value is required here. It is obtained by multiplying $z-z_0$ in the column headed "Trial," by H and is placed in the column headed "Trial." This trial muzzle velocity is the muzzle velocity that would have been obtained had there been no passive resistance.

102.—*Eleventh Line.*—The calculations required in this line are indicated by the formulas given. Use the trial muzzle velocity in calculating P_{mep}.

Digitized by Google

Twelfth Line.—The numbers in this line are the products of the areas in the eighth line by the travel factor determined in the eleventh line. To determine the muzzle velocity we now determine the actual value of z at the muzzle by interpolation of log $\frac{U+l_0}{l_0}$ between two of the numbers in the twelfth line. Place the determined value of z in the first line of the column headed "actual." The corresponding value of $z-z_0$ multiplied by the velocity factor is the actual muzzle velocity and is placed in the sixteenth line in the column headed "actual."

Thirteenth Line.—The numbers in this line are those whose logarithms are in the corresponding columns of the twelfth line.

Fourteenth Line.—These are the numbers in the thirteenth line multiplied by l_0 determined in Form A.

Fifteenth Line.—The remainders obtained after subtracting l_0 from the numbers in the fourteenth line are placed in the fifteenth line. The numbers in this line represent the travels of the projectile in feet corresponding to the values of z in the first line.

Sixteenth Line.—The numbers in this line are obtained by multiplying the corresponding ones in the sixth line by the velocity factor given in the eleventh line. They are the velocities of the projectile corresponding to the travels given in the same columns of the fifteenth line.

Seventeenth Line.—The numbers in this line are obtained by dividing those in the fifth line by those in the fourteenth line and then multiplying the results by the constant G given on Form A.

Eighteenth Line.—Only one value is required here, that corresponds to P_{max} determined in the seventeenth line. The value is determined from the formula given on Form A.

General Remark.—All the quantities in the same columns of Form B are values of different variables which occur at the same instant in the gun. The quantities in the same lines, except the eleventh line, are successive values of the same variable.

Digitized by Google

The velocities, travels and pressures having been determined as functions of z, the velocities and pressures may be plotted as functions of u, the travel.

That is, by plotting the sixteenth and seventeenth lines as ordinates with the fifteenth line as abscissas, we obtain complete velocity and pressure curves for the particular round considered.

103. Example 2.—A charge of 53 lbs., 1 oz. of smokeless powder, Du Pont H, Lot 122, of 1913, was fired in the 12-inch mortar model of 1912. Weight of igniter was 0.75 lb. and of projectile 1046 lbs. The following data pertain to the gun and powder:

Gun	Powder
C, 3774 cu.in.	Nitrogen, 12.60%
A, 114.7 sq.in.	M & V, 4.86%
Av. tan ϕ, $\frac{\pi}{30}$	Stabilizer, 0.4%
p_1, 40,000 lbs.	Web, .0488 in.
U, 12.78 ft.	
P_0, 2500 lbs.	
P_{pm}, 2250 lbs.	

Compute and plot the velocity and pressure curves and determine the muzzle velocity, the maximum pressure and the gauge maximum pressure for the above round, using the graphical method.

Solution.—The complete solution is shown on Forms A and B, below. The maximum pressure occurs at a travel of 1.19 feet. The powder is all consumed at a travel of 2.26 feet.

The calculated muzzle velocity is 1190 feet per second with a calculated gauge maximum pressure of 34,950 lbs. per sq.in. The actual firing test gave 1200 feet per second muzzle velocity and 33,850 lbs. per sq.in. maximum pressure. The agreement between calculated results and those obtained by firings is considered satisfactory when the calculated velocities are within

Digitized by Google

FORM A

GUN, 12" MORTAR, MODEL 1912

POWDER, DU PONT H, LOT 122, OF 1913

POWDER CONSTANTS

$c = 53.06$ lbs.
Igniter = .75 lb.
Total = 53.81 lbs.
Eq. Smokeless $c = 53.44$ lbs.

$x = \frac{D}{d} = 9.51$
$y = \frac{L}{D} = 2.26$
} M. P. grains

$x = \frac{w}{L} =$ S. P. grains

Web = .0488 in.
$R = .0244$ in.
$k = 1.30$
M. & V. { water = 2.43%, alcohol = 2.43%
Stabilizer = 0.4
$n' = 1297000$ ft. lbs. per lb.
$k' = .0001675$ in. per sec.

GUN, PROJECTILE AND GENERAL CONSTANTS

$C = 3774.$ cu. in.
$17.5\,c = 942.$ cu. in.
Air space = 2832. cu. in.
$A = 114.7$ sq. in.
$l_0 = 2.06$ feet
$U = 12.78$ feet
$\frac{U+l_0}{l_0} = 7.2$
$\log\frac{U+l_0}{l_0} = 0.857$
Average tan $\phi = \frac{\pi}{30}$
$\left(\frac{2k_2}{d_1}\right)^2 = .5$
$p = 1046$ lbs.
$p_1 = 40000$ lbs.
$e = \frac{2p+c}{2p_1} = .027$

$p\left[1+\left(\frac{2k_2}{d_1}\right)^2 \tan^2\phi\right] = 1051$ lbs.
$p_1 e^1 = 29.1$ lbs.
$\frac{c}{3} = 17.9$ lbs.

$p' = 1098.0$ lbs.
$P_0 = 2500.0$ lbs. per sq. in.
$P_{pm} = 2250.0$ lbs. per sq. in.
$y'_0 = \frac{3.33 P_0 A l_0}{n' c} = .028$
$z_0 = .037$
$B = \frac{2n'k'^2 p' c}{(1+e)^2 g A^2 R^2} = 16.07$
$H = \frac{(1+e) g A R}{p' k'} = 503.$
$G = \frac{(1+e)^2 g A R^2 (k-1)}{2p'k'^2} = 11300$

FORMULA

$$v = \frac{H}{1+e_p}(z-z_0)$$

$$\log\frac{u+l_0}{l_0} = \frac{2.895}{1+e_p}\int \frac{z-z_0}{By'-(z-z_0)^2}\,dz.$$

$$P = G\frac{By'-(z-z_0)^2}{u+l_0}$$

$$P_{g\,max} = \frac{P_{max}+120\sqrt{\frac{v}{u}}_{(P_{max})}}{1+.02\sqrt{\frac{v}{u}}_{(P_{max})}}$$

Digitized by Google

FORM B GUN, 12" MORTAR, MOD. 1912 POWDER, DU PONT H, LOT 122 OF 1913

																Muzzle Trial	Muzzle Actual
1. s	.2	.4	.6	.8	1.0	1.1	1.2	1.4	1.6	1.8	2.0	2.2	2.4	2.6	2.8	2.562	2.687
2. y'	.150	.310	.481	.661	.850	.904	.946	.986	1.	1.	1.	1.	1.	1.	1.		
3. By'	2.048	4.98	7.71	10.61	13.65	4.51	15.19	15.82	16.07	16.07	16.07	16.07	16.07	16.07	16.07		16.07
4. $(s-s_0)^2$	.027	.13	.316	.585	.925	1.13	1.36	1.86	2.45	3.10	3.85	4.70	5.60	6.55	7.62		7.02
5. $By'-(s-s_0)^2$	2.381	4.85	7.394	10.025	12.725	13.38	13.83	13.96	13.62	12.97	12.22	11.37	10.47	9.52	8.45		9.05
6. $s-s_0$	.163	.363	.563	.763	.963	1.063	1.163	1.363	1.563	1.763	1.963	2.163	2.363	2.503	2.763	2.525	2.65
7. $\frac{s-s_0}{By'-(s-s_0)^2}$	.0683	.0748	.0760	.0760	.0757	.0787	.0841	.0976	.1148	.1361	.1606	.1902	.2258	.2690	.3262		
		683	748	760	760	393	421	841	976	1148	1361	1606	1902	2258	2690		
		744	2276	3794	5414	379	392	8517	10334	12458	14967	17934	21442	25602	30550		
						6931	7703										
8. Cal. of area under curve	.00744	.02276	.03794	.05414	.06931	.07703	.08517	.10334	.12458	.14967	.17934	.21442	.25602	.30550	.36502		
9. Log $\frac{u+l_0}{l_0}(e_p=0)$													.857				
													.741	.885			
													.116	.741			
10. $V.(e_p=0)$														.144		1.270	
11. Cal. of e_p and vel. and travel factors	$P_{mep}=\frac{p'V^2}{2gAU}=18800$					$e_p=\frac{P_{pm}}{P_{mep}}=.12$			Travel factor $=\frac{2.895}{1+e_p}=2.59$				Vel. factor $=\frac{H}{1+e_p}=449$				
12 .log $\frac{u+l_0}{l_0}$	.01928	.059	.0982	.1401	.1795	.1994	.220	.267	.3221	.3880	.464	.555	.662	.857	.944		.857
														.790	.790		
														.67	.159		
13. $\frac{u+l_0}{l_0}$	1.045	1.144	1.254	1.38	1.512	1.581	1.659	1.848	2.10	2.443	2.91	3.585	4.59	6.16	8.79		7.2
14. $u+l_0$	2.15	2.355	2.58	*2.84	3.11	3.25	3.413	3.804	4.323	5.03	5.98	7.37	9.43	12.66	18.08		14.84
15. u	.09	.295	.52	.78	1.05	1.19	1.353	1.744	2.263	2.97	3.92	5.31	7.37	10.60	16.02		12.78
16. v	73	163	252	343	432	476	522	612	702	791	881	971	1061	1151	1240		1190
17. P	12,500	23,250	32,400	39,900	46,300	46,400	45,700	41,400	35,600	29,100	23,000	17,400	12,500	8500	5280		6890
18. Gauge Max. P						34,850											
19.																	
20.																	

Digitized by Google

2% and the calculated pressures within 8% of those obtained on firing.

Plotting of Results.—The velocities and pressures plotted as a function of the travel are shown in Fig. 44. It is to be noted that in this particular problem the maximum pressure is not a true maximum but is merely the highest value the pressure reaches. For a slower powder in this same gun the maximum pressure would have been a true maximum, that is, the left-hand branch of the pressure curve would have bent around at the top so as to become tangent to a horizontal line. In all other respects, however, the

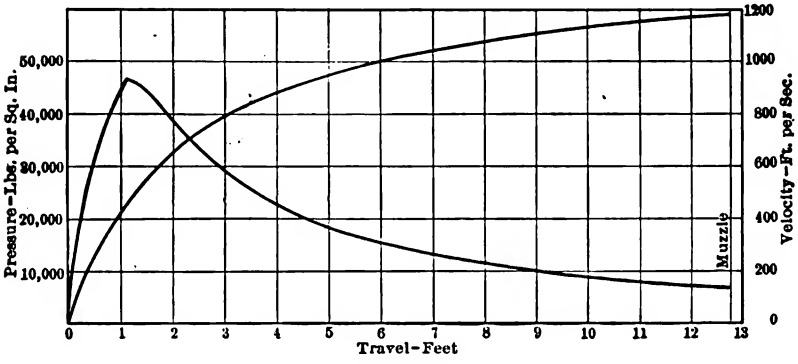

FIG. 44.

curves of both pressure and velocity would have been of the same general form.

104. Design of Powder Grain for a Given Gun.—When the general form of granulation is chosen and the values of x and y are selected, the value of y' as a function of z becomes known. The ballistic effect of grains of this form then depends entirely upon the value of one dimension, say $R = \frac{1}{2}w$.

The density of loading having been determined upon, the weight of charge to be used can be determined from the size of the powder chamber of the gun.

To determine the value of R, proceed as follows:

Select at random any value of R; a value fairly close to the

Digitized by Google

proper one for the gun under consideration may usually be selected from firing records of other guns of the same or approximately the same caliber.

With the charge determined, and the value of R selected, determine by application of the formulas the muzzle velocity and gauge maximum pressure, or if desired complete velocity and pressure curves. In using the formulas the values of n' and k' must be taken for a powder having the percentage of M. & V. usually present in a powder having the value of R selected.

If the value of the gauge maximum pressure thus determined is less than that allowed in the gun, select a smaller value of R and, using the same charge, make the same determinations as before. Make four or five of these determinations, the value of R being so selected as to make some of the determined gauge maximum pressures less, and some greater, than that allowed in the gun.

Plot the determined values of the gauge maximum pressures as a function of the assumed values of R. By drawing a curve through the plotted points the value of R corresponding to the gauge maximum pressure allowed in the gun can be readily determined. This value of R will be the one which, with the charge and density of loading assumed, will give the highest velocity to the projectile within the limit of the gauge maximum pressure allowed in the gun.

Generally the muzzle velocity required in a given gun is specified. If the muzzle velocity corresponding to the value of R just determined is higher than the specified muzzle velocity, the specified velocity is obtained by reducing the charge, using the same value of R as that determined.

This will reduce the gauge maximum pressure and the density of loading below the maximum values assumed.

If the muzzle velocity corresponding to the determined value of R is less than that specified, the specified muzzle velocity can be obtained, if at all, within the limit of maximum pressure, only by increasing the energy per pound of powder used, by dry-

Digitized by Google

ing out more of the solvent, or by permitting the use of a higher density of loading and a larger charge, or by a combination of these methods.

105. Design of a Gun.—In the design of a new gun the caliber, weight of projectile and muzzle velocity are determined by the use to which the gun is to be put. For instance, in the design of a gun to be used against heavy armor plate, the caliber is usually made about the thickness of the armor to be penetrated and the weight of projectile and muzzle velocity are determined so that the armor can be penetrated within mean fighting ranges for a gun of that caliber.

Similar considerations determine the weight of projectile and muzzle velocities of guns intended for other purposes.

Having obtained, or assumed, the weight of projectile and muzzle velocity the problem of determining the size of powder chamber and length of gun required becomes purely one of interior ballistics.

We proceed as follows: Assume first the efficiency with which the powder is to be used. The efficiency with which the powder is used, is the muzzle energy divided by the total energy of the charge, or efficiency $= \frac{pv^2}{2gn'c}$. If the efficiency is assumed, the charge required to give the assumed muzzle velocity may therefore be determined. If now the density of loading is assumed, the size of chamber required for this charge may be determined.

With the determined charge and size of chamber assume several different values for R, and by application of the formulas, determine the corresponding values of the gauge maximum pressures, and the travels required to obtain the required muzzle velocity. Plot the gauge maximum pressures as a function of R and determine the value of R corresponding to the gauge maximum pressure to be allowed in the gun. Determine from the formulas the value of the travel corresponding to this value of R and the assumed charge and chamber.

If the travel thus determined makes the gun inconveniently

Digitized by Google

long for the purpose for which it is intended or for the way in which it is to be mounted, assume a smaller value for the efficiency of the powder, determine the new charge, chamber capacity, value of R and travel, as before. On the other hand, if the first assumption makes the gun shorter than it can conveniently be made, increase the value assumed for the efficiency of the powder and go through the same calculations as before.

Digitized by Google

CHAPTER V

METALS USED IN ORDNANCE CONSTRUCTION

Strength of Metals

106. Elasticity.—In mechanics, as ordinarily treated, solid bodies are considered " rigid," that is, they are supposed to retain all their dimensions unaltered under the action of the various forces to which they may be subjected.

While this assumption is frequently true if we consider only the final condition of the bodies after the action of the forces has ceased, when we come to consider the condition of the bodies during the time the forces are acting we find that all bodies are more or less deformed. The theory of elasticity deals with the nature and amount of this deformation in various parts of the bodies under consideration and with the forces transmitted by those parts.

Consider a rod to each end of which a tensile force of 10,000 lbs. is applied. If we pass a perpendicular plane through any point of the axis of the rod it is evident that the force of 10,000 lbs. is transmitted across the plane by the mutual action of the material of the rod on each side of the section in question. The same would be true if the force were one of compression or torsion. It is evident, then, that we must take into account not only the action of a force at its point of applica ion, but also its action throughout the mass of the body under consideration.

Stress and Strain.—Stress is defined as a force transmitted from one part of a body to another.

Stresses are fundamentally of three kinds—tensile, compressive and shearing. Compound stresses, as bending and torsional stresses, may be resolved into combinations of the three fundamental kinds.

Digitized by Google

Tensile and compressive stresses are measured in pounds per square inch of surface normal to their action lines. For example if the rod considered above had an area of cross-section of 1 sq.in. it would be said to be subjected to a tensile stress of 10,000 lbs. per sq.in.

A shearing stress is measured in pounds per square inch of shearing surface. The action line of the shearing stress is parallel to the shearing surface.

Strain is the deformation which a body suffers under the action of stress. Each kind of stress produces a corresponding strain in the body. A tensile stress produces elongation, a compressive stress compression.

For comparative purposes tensile and compressive strains are measured by the elongations or compressions, in inches, produced per inch of original length of the body.

If the rod in the above example were 6 feet long and were found to elongate 0.024 in. under the effect of the applied stress, it would be said to have a tensile strain of $0.024/72 = 1/3000$ in. per inch.

A shearing stress so deforms the body that an elementary square in a plane perpendicular to the shearing surface and parallel to the action line of the shearing stress has one diagonal lengthened and the other shortened.

For comparative purposes, shearing strains, also known as distortions, are measured by the angular deformation of the elementary square considered. This deformation can be measured in the testing machine only in the case of torsion, which is considered a particular kind of shear.

A shear in one plane is always accompanied by an equal shear in a plane at right angles to the first.

107. Moduli of Elasticity.—The ratio of the unit intensity of a tensile or compressive stress to the resultant unit strain when the metal is not strained beyond its elastic limit, is known as Young's Modulus of Elasticity, or as the Stretch Modulus. It is usually denoted by E and measured in pounds per square inch.

The ratio of the unit intensity of a shearing stress to the angular

Digitized by Google

deformation produced in the elementary square mentioned above, is known as the Modulus of Rigidity, or the Shear Modulus and is measured in pounds per square inch.

The ratio of the unit stress to the unit change in volume produced in a given body when the stress is uniformly distributed over the surface of the body is known as the Bulk Modulus, and is also measured in pounds per square inch.

Young's Modulus is referred to when the term " Modulus of Elasticity " is used without any qualifying word.

In steel Young's Modulus is usually about 30,000,000 lbs. per sq.in., the Modulus of Rigidity about 12,000,000 lbs. per sq.in. and the Bulk Modulus about 25,000,000 lbs. per sq.in.

Relation between Stress and Strain.—If we denote the Modulus of Elasticity by E, the strain per unit of length (extension or compression as the case may be), by l and the applied stress per unit area (tensile or compressive), by s, we have by the above definition,

$$E=\frac{s}{l} \quad \text{or} \quad l=\frac{s}{E}. \quad . \quad . \quad . \quad . \quad . \quad . \quad . \quad . \quad (1)$$

Physical Qualities of Metals.—The following qualities of metals are those with which we are most concerned in ordnance construction.

Fusibility.—The property of being readily converted into the liquid form by heat.

Malleability.—The property of being permanently extended in all directions without rupture when hammered or rolled.

Ductility.—The property of being permanently extended without rupture, by a tensile stress, as in wire-drawing.

Hardness.—The property of resisting change of form under a compressive stress. A hard metal offers great resistance to such a stress, while a soft metal yields readily and changes its form without rupture. The terms hardness and softness are of course comparative only.

Toughness.—The property of resisting fracture under change of form produced by any stress.

Digitized by Google

Elasticity.—The property of resisting permanent deformation under change of form. This is one of the most important properties of gun metals, which under the high stresses due to the explosion are subjected to extensive deformation. Through this property the deformations disappear on the cessation of the stress and the metal resumes its original dimensions.

108. Strength of Metals.—The strength of metals is ordinarily determined by physical tests in a testing machine. As the tensile strength of metals is less than the compressive strength, usually a tensile test only is applied. A test specimen is cut from the metal to be tested and is prepared in suitable form to be inserted in the machine. The area of the cross-section of the test specimen is usually a square inch or some aliquot part of a square inch.

In the machine the test piece is subjected to a tensile stress, the amount of which is recorded by a sliding weight on a scaled beam. The test piece stretches under the applied stress. With elastic metals it will be found that up to the application of a certain stress the test piece will resume its original length if the stress is removed, but on the application of a stress greater than this the test piece will remain permanently elongated. When permanent distortion occurs the metal is said to have a permanent set.

Elastic Limit.—The stress per square inch applied at the moment that the permanent set occurs is called the elastic limit of the metal. Within this limit the metal has practically perfect elasticity and does not suffer permanent deformation.

As the stress increases beyond the elastic limit the metal stretches permanently and more rapidly, the cross-section reduces, and finally the test piece ruptures. In some metals such as wrought iron and steel the reduction of area of cross-section is much the largest at or near the section where rupture occurs and in this vicinity the percentage of elongation is much greater than elsewhere; but in other metals, as for instance, ordinary bronze, the reduction of area and the percentage of elongation are practically uniform throughout the length of the test piece.

Eq. (1) is true only up to the elastic limit. If we devote the

Digitized by Google

unit stress at the elastic limit in tension by θ and in compression by $-\rho$, and the corresponding unit strains by γ the above equation becomes,

$$\gamma = \frac{\theta}{E} \text{ or } -\frac{\rho}{E}, \quad \ldots\ldots\ldots \quad (2)$$

as the case may be.

Tensile Strength.—The stress per square inch that produces rupture of the metal is called the tensile strength.

Elongation at Rupture and Reduction of Area.—In ordnance structures the stresses are not expected to exceed the elastic limit of the metal, but should they by any chance exceed this limit the tensile strength of the metal and its capacity to permanently elongate before rupture become of importance. The permanent elongation will serve as a warning that the elastic strength has been exceeded. The reduction of area of cross-section is intimately connected with the elongation. In the tests of metals for ordnance purposes these particulars are, therefore, always noted and limits are prescribed. For the measurement of the elongation at rupture the parts of the ruptured test piece are brought together and the distance is measured between two punch marks that were made on the test piece before insertion in the testing machine.

The tensile test, therefore, includes the determination of the elastic limit, the tensile strength, the elongation at rupture, and the reduction of area of cross-section. The last two are recorded in percentages of the original dimensions.

PROBLEMS

1. A rod is made of steel having an elastic limit of 60,000 lbs. per square inch. What will be the elongation per unit of length at the elastic limit?

2. If the rod in Problem 1 is 20 ft. long and 2 sq.ins. in cross-section, how much will it be elongated by a total pull of 75,000 lbs. at its ends?

3. A copper rod 1 in. in diameter elongates 0.1 in. when sustaining a load of 5000 lbs. How long is the rod?

109. Physical Requirements.—The following table shows the physical requirements demanded by the Ordnance Department in the principal metals used in ordnance construction.

Digitized by Google

PHYSICAL REQUIREMENTS OF METALS

Designation.	Elastic Limit, Lbs. per Sq.in.	Tensile Strength, Lbs. per Sq.in.	Elongation at Rupture, per cent.	Contraction of Area, per cent.
Cast iron No. 1	.....	22,000		
Cast iron No. 2	.....	28,000		
Wrought iron	22,500	50,000	25	35
Cast steel No. 1	25,000	60,000	16	24
Cast steel No. 2	35,000	75,000	15	20
Cast steel No. 3	45,000	85,000	12	18
Forged steel No. 0				
Forged steel No. 1	27,000	60,000	28	40
Forged steel No. 2	35,000	75,000	20	30
Forged steel No. 3	42,000	90,000	16	24
Forged steel A	53,000	93,000	18	30
Forged steel B	65,000	95,000	18	30
Forged steel C	75,000	110,000	14	30
Forged steel D	100,000	120,000	14	30
Tool steel A	75,000	125,000	16	25
Tool steel B	95,000	140,000	12	20
Tire steel	50,000	100,000	17	30
Flange steel	40,000	64,000	20	45
Gun steel (tubes)				
Under 8 in. cal	50,000	90,000	18	30
Over 8-in. cal	46,000	86,000	18	30
Gun steel (jackets)				
Under 8-in. cal	50,000	90,000	18	30
Over 8-in. cal	48,000	88,000	18	30
Gun steel (hoops)	53,000	93,000	18	30
Nickel steel for guns	65,000	95,000	18	30
Steel wire for guns ($\frac{1}{8}$ in.)	.....	180,000		
Steel wire for guns ($\frac{1}{10}$ in.)	.....	200,000		
Bronze No. 1	.....	28,000		
Bronze No. 2	.....	35,000		
Bronze No. 3	.....	45,000		
Bronze No. 4	.....	60,000	20	
Extruded bronze	.....	50,000	12	
Tobin bronze	.....	52,000	30	
Copper	.....	32,000	22	

Forged steel No. 0 is ordinary commercial steel for which no physical requirements are specified. Forged steels B, C and D are nickel steels. Forged steel D may also contain chromium. To

Digitized by Google

prevent brittleness the strength of cast iron No. 2 is limited to 39,000 lbs. per square inch. In special cases the requirements for gun forgings may differ slightly from those given in the table.

Elastic limit, elongation and contraction of area are not specified for steel wire for guns, but in the case of $\frac{1}{8}$ in. square wire the permanent elongation due to an increase in stress from 20,000 to 100,000 lbs. per square inch must not exceed 0.35% of the original length. In the case of $\frac{1}{10}$ in. square wire the permanent elongation due to an increase of stress from 20,000 to 140,000 lbs. per square inch must not exceed 0.50% of the original length.

While some of the bronzes show a well-defined elastic limit no requirement is made in this respect, but they are required to come up to the specified percentage of elongation at rupture.

Chemical Requirements.—Any of the physical properties given in the preceding table may be obtained from steels of varying chemical composition. The chemical composition is, therefore, frequently left to the manufacturer to determine. As will be shown later, however, the heat treatment to which a steel must be subjected in order to give certain physical properties depends upon its chemical composition and, therefore, in order to secure uniformity of heat treatment the chemical composition of such steels as are to be heat treated during manufacture is specified.

The following table gives the approximate chemical composition of some of the steels listed in the preceding table:

CHEMICAL COMPOSITIONS OF STEELS

Designation	Carbon %	Manganese %	Nickel %	Chromium %
Forged steel:				
No. 1	.20 to .30	.50 to .80		
No. 2	.35 to .40	.50 to .80		
No. 3	.50 to .60	.50 to .80		
B	.35 to .40	.50 to .80	3.00 ± .15	
C	.40 to .45	.50 to .80	3.50 ± .15	
D	.45 to .50	.50 to .80	3.50 ± .15	
or	.35 to .40	.30 to .50	3.50 ± .15	1.50 ± .10

Digitized by Google

110. Testing Machine.—The standard government testing machine is at Watertown Arsenal, Mass. It has a testing capacity of 800,000 lbs.

A smaller testing machine, with a capacity of 50,000 lbs., is shown in Fig. 46. The specimen of the metal to be tested is turned to the shape shown by the piece marked 1. The ends of the test specimen are grasped by clamps fixed in the upper fixed head, *f*, of the machine and in the lower movable head *m*. Four heavy vertical screws pass through the corners of the movable head, and by their means the movable head is moved toward or from the fixed head, exerting on the specimen held between the clamps a force of compression or of extension as desired. The amount of this force is measured by a sliding weight, *w*, on a scaled beam in the same manner as a weight is determined on an ordinary scale. The total force divided by the area of cross-section of the test specimen gives the force exerted per square inch.

A graphic representation of the relation between the force exerted and the change in length of the test specimen is made on the indicator card, *c*. An indicator card, showing the results of tensile tests on specimens of several metals, is shown in Fig. 45. Within the elastic limit of the metal the elongation of the test piece is proportional to the tensile stress. Up to this point, therefore, the line made by the indicator will be a straight line. At the elastic limit, where the bends occur in Fig. 45, permanent set occurs, and the test piece thereafter elongates more rapidly than the stress increases.

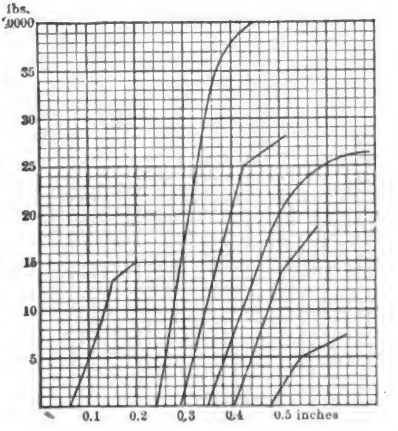

FIG. 45.

To prevent injury to the indicating apparatus by the shock that occurs when the test piece breaks, the indicator

Digitized by Google

is usually disconnected after the elastic limit has been registered.

The point where permanent set takes place frequently occurs before the point where strain ceases to be proportioned to stress. In such cases it is necessary to specify which point is referred to when the term elastic limit is used.

Yield Point.—There is frequently a point somewhat beyond the elastic limit where there seems to be a sudden yielding of the specimen. This is sometimes great enough to bend this portion of the curve so as to make it horizontal or even inclined downwards. This is called the yield point, and is sometimes confused with the elastic limit.

Chemical Composition, Uses and Treatment of Metals

111. Copper, Brass, Bronze, Aluminum.—Pure copper is used for bands of projectiles. In alloys, as brass and bronze, it enters into the construction of parts of guns and gun carriages not usually subjected to great stress. In this form, too, it is extensively employed in the manufacture of bushings, cartridge cases, fuses, primers, gun sights, and instruments. Brass is an alloy of copper with zinc. Bronze, properly speaking, is an alloy of copper with tin and usually a small quantity of zinc, but it is seldom used in ordnance construction. Bronze Nos. 1 and 4, are really brasses.

The addition of zinc or tin produces a harder and stronger metal better suited than the soft copper for the uses to which these alloys are applied. By the addition of aluminum to the alloy the strong hard bronze known as aluminum bronze is produced.

Bronze No. 4 contains copper and zinc and about 1½% of iron with a small amount of aluminum and tin. It is commercially known as manganese bronze because the iron is introduced through the medium of the alloy of iron and manganese known as ferro-manganese. The manganese, however, slags off and practically none remains in the metal after casting. Bronze No. 4 is about the

Digitized by Google

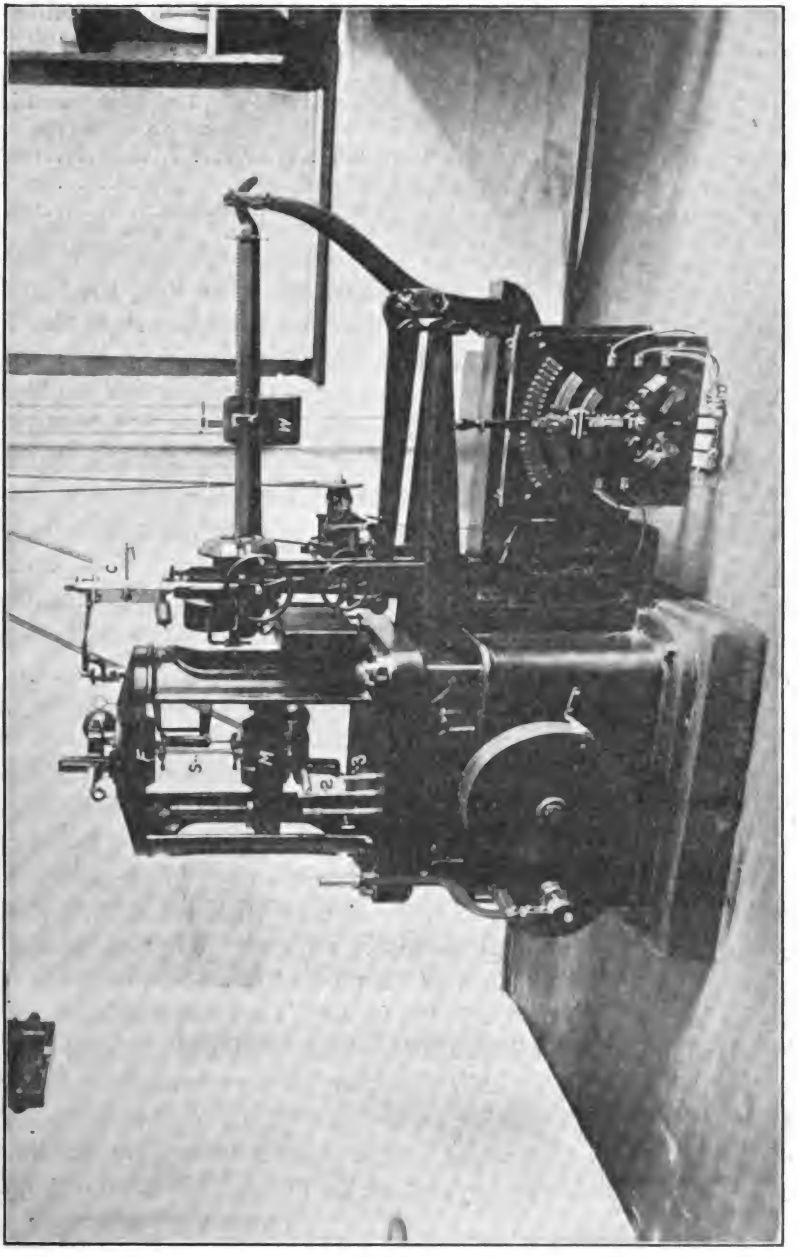

FIG. 46.—Riehlé Testing Machine. Capacity, 50,000 lbs.

Digitized by Google

strongest and most serviceable alloy of copper and its composition and method of manufacture will, therefore, be more fully described.

Composition of Bronze No. 4	
Copper	58%
Zinc	39%
Aluminum	1%
"Steel alloy"	2%

Composition of "Steel Alloy" used in Bronze No. 4	
Tin	29%
Wrought iron	58%
80% Ferro-manganese	13%

The steel alloy is first made separately by melting the ingredients together in a crucible and is then broken up into small pieces, which can be readily done, as it is very brittle. The copper and steel alloys are then melted together, next the aluminum is added and finally, just before pouring, the zinc is added. If added too soon, or if the melted mixture is too hot when the zinc is added, a large percentage of zinc will volatilize off, interfering with the composition of the product. When the zinc is added the molten mixture is covered with charcoal to prevent as much as possible the volatilization of the zinc. The zinc should be of the highest grade, free from all impurities but in particular free from lead, which is very injurious to Bronze No. 4.

Aluminum and some of its alloys are being used to an increasing extent in ordnance constructions where lightness is essential.

112. Iron and Steel.—When iron ore is reduced in the blast furnace the product, called pig iron, is an alloy of iron with about 4% of carbon. This alloy may be readily fused and cast into any desired shape, and is then called cast iron. By various processes, some of which will be given in the description of the manufacture of steel, the amount of carbon may be reduced. When the amount of carbon is less than 2% and the product is cast into moulds or ingots from the fluid state in the furnace it is called steel. If cast into moulds and not subsequently forged, it is known as cast steel, while if cast into ingots which are subsequently reheated and forged to the desired shape, it is known as forged steel. When the amount of carbon is less than 0.2% and product is formed by puddling while in a semi-fluid or pasty state in the furnace it is called wrought

Digitized by Google

iron. The puddling operation leaves a certain amount of slag in a fibrous state between the crystals of iron, giving wrought iron its characteristic fibrous appearance. The presence of this slag constitutes the chief difference between wrought iron and steel when the carbon content of each is less than 0.2%.

As the amount of carbon is reduced the qualities of the metal change in a marked degree. Cast iron is easily fusible, is hard and not malleable or ductile, cannot be welded, and has a crystalline structure. Wrought iron, on the other hand, is not readily fusible, is soft, and possesses great malleability and ductility. It is easily welded and has a fibrous appearance.

The properties of steel lie between those of wrought iron and cast iron, and the steel partakes of the characteristics of one or the other according to the percentage of carbon contained. Thus low steel, that is, steel low in carbon, is comparatively soft and may be readily welded or drawn into wire, while high steels are harder and more brittle and weld with difficulty.

113. Uses.—Cast iron, cast steel and forged steels are all used in ordnance construction and to a greater extent than any other metals. Cast iron, on account of its cheapness and ease of manufacture in irregular shapes, is used when practicable when great strength is not required or when great weight is not objectionable. It is used for projectiles for target practice and in parts of gun carriages not subject to high stresses.

Cast steel is used in parts of gun carriages of such shapes that they cannot readily be forged, and subject to stresses which they could not withstand if made of cast iron. Examples are the top carriages and pedestals of seacoast gun carriages.

Cast steel subjected to special treatment is used for guns in some foreign countries. Cast steel armor-piercing projectiles manufactured at Watertown Arsenal are being used to a considerable extent in our service.

Forged steel is used almost exclusively in our service for gun forgings. It is also used for those parts of gun carriages subject to the greatest stresses, and is the principal metal used for projectiles.

Digitized by Google

When lightness combined with great strength is required, as in field gun carriages, forged steel is used almost exclusively.

Wrought iron, formerly used extensively in ordnance construction, has been displaced by steel and is now used only for special purposes, as when parts are to be welded in assembling.

114. Constituents of Iron and Steel.—As stated above, the physical qualities of iron and steel depend largely upon the amount of carbon contained, but it is found in practice that even when the percentage of carbon is fixed, the physical qualities may be varied over wide limits by varying the heat treatment to which the steel is subjected.

The subject of the changes in physical properties of iron and steel caused by changes in heat treatment has been thoroughly studied by metallurgists, who have arrived at the conclusion that the change in physical qualities is due principally to a change in the manner in which the carbon is contained in the iron.

Pure iron, known as ferrite, is soft and ductile. The carbon in steel and cast iron is generally in chemical combination with ferrite, forming the substance Fe_3C, known as cementite, which is intensely hard and brittle.

These two substances, ferrite and cementite, are the principal constituents of iron and steel, though sometimes, especially in cast iron, free carbon in the form of graphite is also present. When all the carbon is in the form of cementite it is seen from the chemical formula that the percentage of cementite is fifteen times the percentage of carbon in the metal. Iron containing $6\frac{2}{3}\%$ carbon is, therefore, entirely cementite unless some of the carbon is free. The ferrite and cementite may appear in the metal in two forms:

1. As mechanical mixtures or aggregates.
2. As " solid solutions " of cementite in ferrite.

Austenite.—The solid solution known as austenite is defined as a compound which bears the same relation to the solid solvent ferrite as a liquid solution of, say, salt in water, bears to the solvent water. It is formed from a mixture of ferrite and cementite at a temperature above 700° to 1000° C., depending upon the amount

Digitized by Google

of cementite or carbon contained in the metal. The solid solution may contain any amount of cementite up to the point of saturation which is reached, when it contains from 13.5% to 25.5% cementite, corresponding to from .9% to 1.7% carbon. The exact cementite or carbon content of the solid solution at saturation depends upon the temperature of the metal.

Pearlite.—The mechanical mixture of ferrite and cementite containing 13.5% cementite or .9% carbon forms austentite at a lower temperature than any other mixture and is known as pearlite.

Solutions of solids in liquids of such proportions as to form at the lowest temperature are known as eutectic solutions. By analogy pearlite is known as a " eutectoid " mixture and the solid solution or austenite formed from it is a " eutectoid " solid solution.

Steel containing less than 0.9 of 1 per cent of carbon is considered to be composed of pearlite and an excess of ferrite, while the steels higher in carbon contain pearlite and an excess of cementite.

115. Effect of Heat.—The effect of heat on the condition of iron or steel may now best be studied by reference to Fig. 47 in which the ordinates represent temperatures on the Centigrade scale and the abscissæ percentages of carbon and of iron in the solution. The melting- (or freezing-) point of pure iron is about 1500° as shown at *L*. As the percentage of carbon is increased, the melting-point of the solution is lowered until, with 4.3% of carbon, it reaches a minimum of about 1125°. Further increase of carbon raises the melting-point, as indicated by the line *EL*1. The line *LEL*1 is known as the " liquidus." It separates the region in which the solution is completely liquid from the regions in which it is completely or partially solid.

The liquid solution of carbon in iron differs not at all in principle from the solution of salt in water.

Solidification which begins on the liquidus is not completed until the line *LSES*1 is reached. This is known as the " solidus," and separates the regions of complete from those of partial solidification.

Digitized by Google

Pure iron on cooling from a liquid state will solidify at 1500° precisely as water solidifies at 0°. Likewise a solution containing

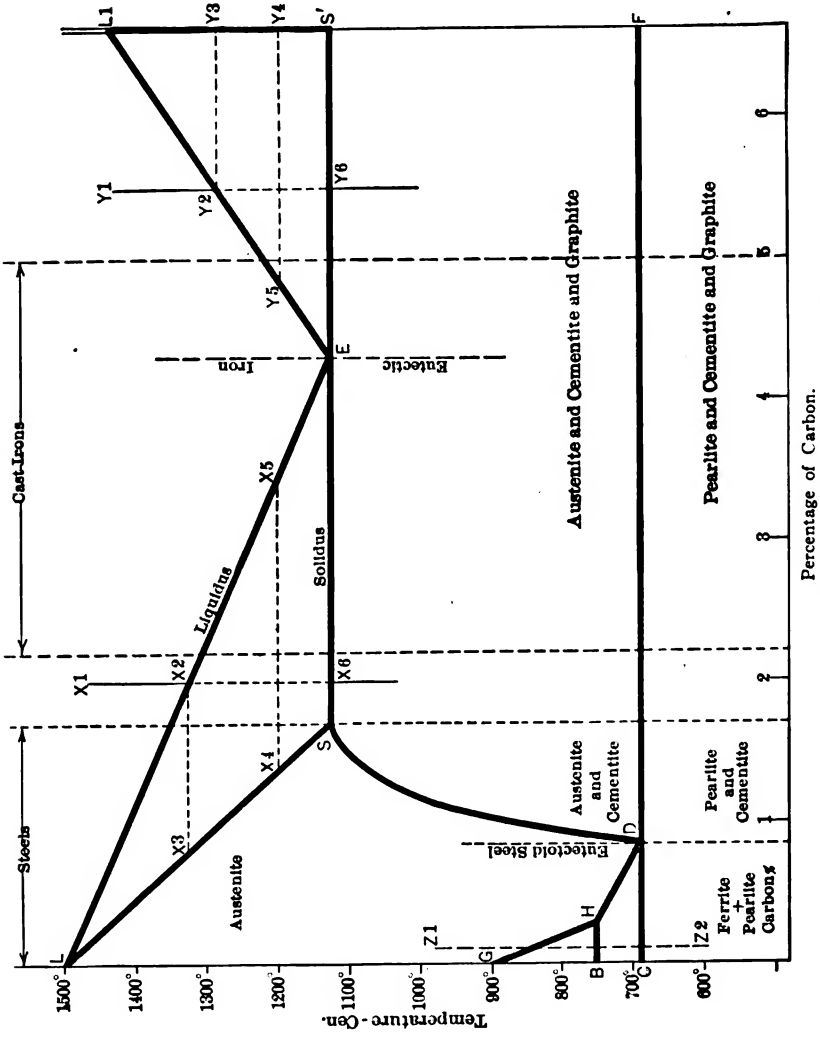

FIG. 47.—Effect of Heat on Iron and Steel.

4.3% carbon will solidify at 1125°. A solution of this proportion is known as a eutectic solution. A solution containing any other

Digitized by Google

per cent of carbon will behave somewhat differently. If we start with a solution containing 2% carbon at a temperature of 1450°, as indicated by X_1, the liquid will cool without change in its constitution until the liquidus is reached at X_2. Solidification will now begin, but the crystals formed will not contain 2% carbon, but will be of the composition indicated at X_3 on the solidus. As cooling continues, the solidified portion at any moment will correspond to a point on the solidus and the mother liquid, becoming richer in carbon, will correspond to a point on the liquidus. For instance, when the temperature reached is 1200°, the solid portion will contain 1.35% carbon (X_4), while the liquid portion will contain 3.45% (X_5). Finally when a temperature of 1125° is reached ($X6$), the whole mass is solid and the per cent of carbon in the solid metal must be the same as that in the original liquid.

The solid portion which separates along the line *LSE* is austenite.

If in a similar manner we follow the cooling of a liquid solution containing more than 4.3% carbon, as for instance, *Y* containing 5.5%, the phenomena will be analogous except that the first portion to solidify will be pure cementite, with a constant per cent of carbon instead of austenite with a varying per cent of carbon. In general, it may be stated that the structure, after the solidus is passed, of a mixture whose carbon content falls between *L* and *S* will consist entirely of austenite, and of a mixture whose carbon content falls to the right of *S* of austenite and cementite.

116. Allotropic Modifications.—*Thermal Critical Points of Pure Iron.*—As cooling is continued below the solidus, the above structure does not remain and it is these later changes that give to iron and steel their wide variations in properties. We shall now consider the allotropic modifications which take place in pure iron at different temperatures. When a piece of the purest iron obtainable is heated by placing it in a constant-temperature furnace it is found that its temperature rises uniformly with the time until it reaches 760° C. At this point the temperature stops rising for a few minutes, after which it again continues to rise at a higher rate than before until it reaches about 900° C. At this point the phenom-

Digitized by Google

enon shown at 760° C. is repeated. The two points referred to are known as the thermal critical points of pure iron. They are shown at *B* and *G* in the figure. The absorption of heat which evidently occurs at these points is believed to be used in converting the iron from one allotropic form to another. There thus arise three allotropic forms of pure iron. That which exists below 760° C. is known as α-iron; that between 760° C. and 900° C. as β-iron, and that above 900° C. as γ-iron.

Thermal Critical Points of Steel.—The introduction of carbon in ferrite to form steel or cast iron displaces the positions of the critical points of pure iron and introduces another critical point at a temperature of 680–700° C. or on the line *CD*. When the amount of carbon present is less than about 0.28%, steel has three critical points.

The highest one shown by the line *GH* is less than, and the middle one shown by the line *BH* is about equal to, the corresponding temperature for pure iron. As in pure iron these two upper critical points are caused by allotropic changes in the ferrite of the steel.

The lowest critical point shown by the line *CD* is due to a change in the condition of the metal from pearlite and ferrite or pearlite and cementite to austenite or vice versa. It is independent of the amount of carbon in the metal, but is affected by the presence of other elements.

The lowest critical point of steel is more marked than the other two. It is also called the point of "recalescence," from the fact that steel cooling through this point may actually show a rise in temperature for a few minutes without the addition of heat from the outside.

In steels containing more than 0.28% and less than 0.85% to 0.90% carbon the two upper critical points join each other with the result that these steels have only two critical points, those on the line *HD* and those on the line *CD*. In steel containing 0.85% to 0.90% carbon all three points join at *D* and this steel has only one critical point.

Digitized by Google

Steels from 0.90% to 1.7% carbon have two critical points, one on the line *DF* and the other on the line *DS*.

117. Changes as Cooling is Continued below Solidus.—If we follow the cooling of a steel containing 0.1% carbon from the point Z_1 the following phenomena take place: Until the line *GH* is reached, there is no change in composition. As *GH* is crossed γ-iron changes to β-iron.

At the same time there is a tendency for pure iron and for graphite to separate from the solution (austenite). These changes would go to completion if the metal were held for a sufficient time at the point of crossing *GH*. As this is never done, they continue during the whole stage of cooling from *GH* to *BH*, and their degree of completion will depend upon the rapidity of cooling. The graphite thus liberated appears in the steel in the form of fine flakes and is known as " temper carbon."

As the line *BH* is crossed β-iron changes to α-iron. The graphite which previously separated now tends to unite with iron to form Fe_3C. The carbide (cementite) tends to form a definite mixture with the iron (ferrite) in which the percentage of carbon is 0.90. This mixture is the pearlite previously described. Since there is an excess of iron, the remaining ferrite crystallizes by itself.

A corresponding series of changes will be passed through for any percentage of carbon up to 0.90% except that for over about 0.28%, β-iron is no longer formed, and there is, therefore, no formation of temper carbon. α-iron is formed directly from γ-iron.

It is evident that as the percentage of carbon increases the excess of ferrite will diminish and finally disappear at 0.90%. If the percentage of carbon is greater than this but less than 1.7, the austenite becomes unstable when the line *DS* is crossed. There is now an excess of carbon in the form of cementite and the steel crystallizes in the form of crystals of pearlite with a matrix of cementite. The greater the percentage of carbon, the greater the excess of cementite.

118. Cast Iron.—This range of carbon content (0.0% to 1.7%) includes what are known as steels. Alloys of higher carbon con-

Digitized by Google

tent, between the limits of about 2.05% and 5%, embrace the cast irons. Cast iron when quickly cooled consists of austenite or its modifications and cementite, the latter being largely in excess. This is known as white cast iron. When more slowly cooled there is a tendency for the cementite to break up into graphite and ferrite, forming gray cast iron. In this the graphite is in thin flexible sheets distributed throughout the metal.

The graphite in this form makes the metal weak and brittle. White cast iron contains but little or no graphite, but has a much higher percentage of cementite than either gray cast iron or steel. It contains no more carbon than gray cast iron, but practically all the carbon is in the form of cementite, making the alloy extremely hard and brittle.

Malleable Cast Iron.—When white cast iron is annealed by heating it to 700–900° C. and allowing it to cool slowly, the cementite it contains is broken up into ferrite and graphite, the latter being deposited very uniformly throughout the metal in the form of a fine powder instead of in sheets as in gray cast iron.

The uniform distribution of the graphite in this form makes the metal soft and gives it to a considerable extent the property of malleability. Cast iron made in this way is commercially known as malleable cast iron. It contains practically the same amount of carbon as the white cast iron from which it is made.

Malleable castings are also made by packing white iron castings in an oxidizing material and subjecting them to a high temperature for a long time and then allowing them to cool slowly. By this method part of the carbon is burned out of them, causing the metal to approach the condition of steel.

119. Effect of Time.—*Other Substances Formed.*—Fig. 47 represents the changes which take place in the metal when slowly cooled from the melted condition. A piece of cold steel that has been treated in this way consists of ferrite and pearlite or cementite and pearlite, depending upon the percentage of carbon, and a piece of steel above the critical temperature consists of austenite alone or of austenite and cementite. All the changes indicated requi

Digitized by Google

time for their completion, and if a piece of the metal is suddenly cooled its change may be arrested, leaving the metal in the particular condition desired. For instance, if a piece of steel is suddenly cooled from a temperature above 700 C., the austenite which it contains at that temperature will not change to the other substances described, but will remain in the cold metal.

It is found in practice, however, that cooling sudden enough to retain austenite in the cold metal cannot be obtained except in the case of steels rich in nickel or manganese. In carbon steels, even with the most rapid cooling obtainable, there is a partial transformation of austenite into pearlite and ferrite or cementite.

This partial transformation gives rise to three well-recognized substances that exist in hardened steel. They are as follows:

Martensite.—This is the first stage in the transformation of austenite into ferrite and cementite. It is very hard and has a characteristic needle-like structure. It is to this constituent that the cutting properties of tool steels are due.

Troostite.—This is a stage following martensite. It consists of irregular, finely granular, nearly amorphous areas. It is not so hard as martensite.

Sorbite.—This is a stage following troostite and just preceding the final resolution into ferrite and cementite. It appears to be a conglomerate of ferrite and cementite which has not yet assumed a definite structure. It is softer than troostite and more ductile.

Changes inverse to the above take place as the metal is heated. In general, however, on account of the time element a given change requires a higher temperature on heating than that at which its inverse took place on cooling.

120. Microscopic Examination of Steel.—The ultimate composition (proportion of elements), of steel is made by chemical analysis, but on account of the complex nature of the compounds, solutions, or mixtures as they actually exist in steel it is not possible to determine completely by chemical analysis the structural composition, or nature and proportion of the various substances that may exist in a given specimen.

Digitized by Google

The principal advances that have been made in determination of the structural composition of steel are due to microscopic examination and photography of specimens. For this purpose specimens are very highly polished and then etched in an alcoholic solution of nitric acid, or in some other reagent, in order to remove the thin film of nearly pure ferrite which polishing leaves on the surface of the metal. After etching, the true crystalline form shows up very clearly under the microscope. For some purposes the etching is unnecessary as, for instance, in looking for slag. Here the slag, being dark, shows up much more prominently before etching than after.

The decreasing amount of ferrite as the percentage of carbon increases is well illustrated by Figs. 48 to 50, in which the ferrite shows white and the pearlite dark.

That pearlite is a mixture and not a solution is evident if it be subjected to a higher magnification. It is then seen to consist of characteristic layers of ferrite and cementite as in Fig. 51.

Increasing proportion of cementite with increasing carbon is shown in Figs. 52 and 53, in which cementite shows white.

Martensite, troosite and sorbite are shown in Figs. 54, 55 and 56, respectively. The needle-like structure of martensite and the gradual change from martensite through troosite and sorbite to pearlite and cementite (Fig. 52), are plainly shown.

121. **Hardening.**—It will now be easy to understand the process of hardening steel by means of high heat followed by quick cooling. The high heat causes the formation of austenite in the metal. If the metal is allowed to cool slowly the austenite is retransformed into ferrite and cementite. This transformation requires an appreciable time, and if the metal is suddenly cooled from its high temperature the retransformation is partially prevented, and the hard components, martensite, troostite, etc., are preserved in the cold metal.

The change in the character of steel being due principally to the change in the condition of the carbon between its states in pearlite and cementite and in austenite, etc., the effect of the heat

Digitized by Google

FIG. 48.
0.18% carbon. Ferrite (white) and pearlite (dark). Magnification 75.

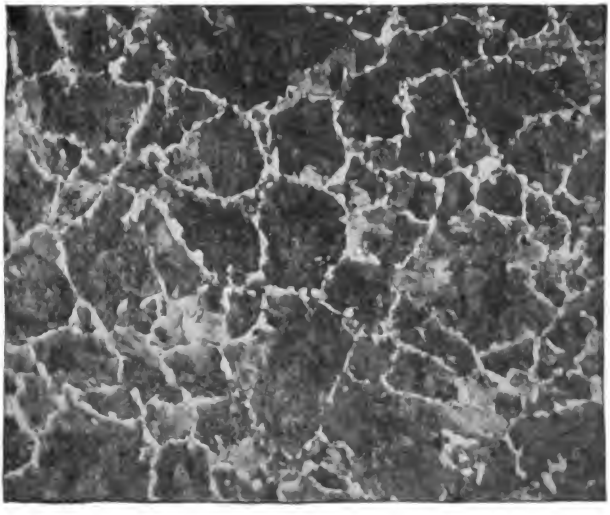

FIG. 49.
0.57% carbon. Ferrite and pearlite. Magnification 75.

Digitized by Google

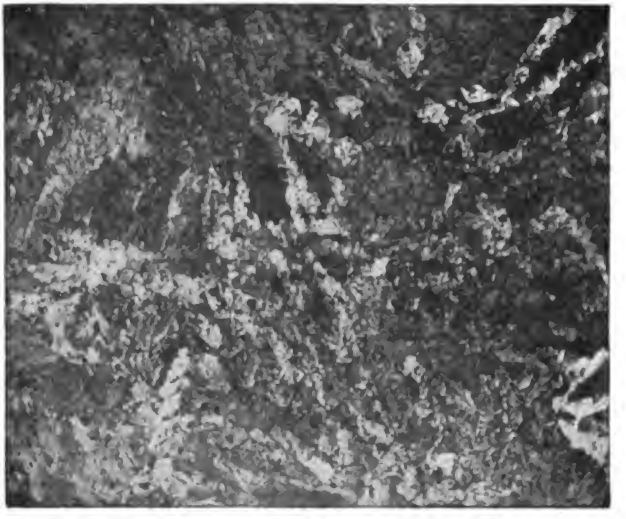

FIG. 50.
0.83% carbon. Practically pure pearlite. Magnification 75.

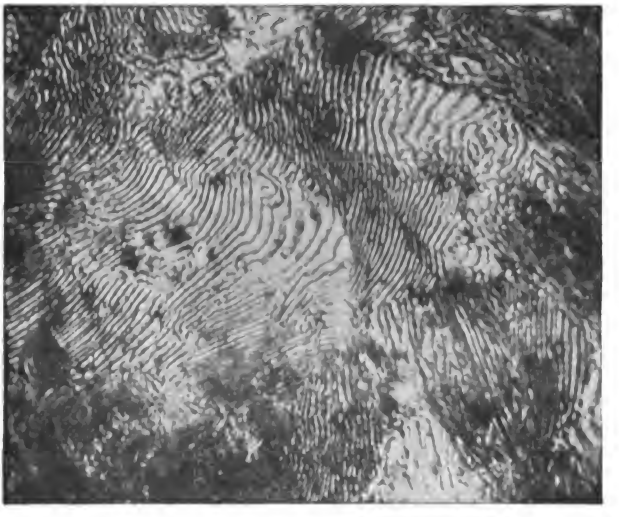

FIG. 51.
0.83% carbon. Practically pure pearlite. Magnification 485.

Digitized by Google

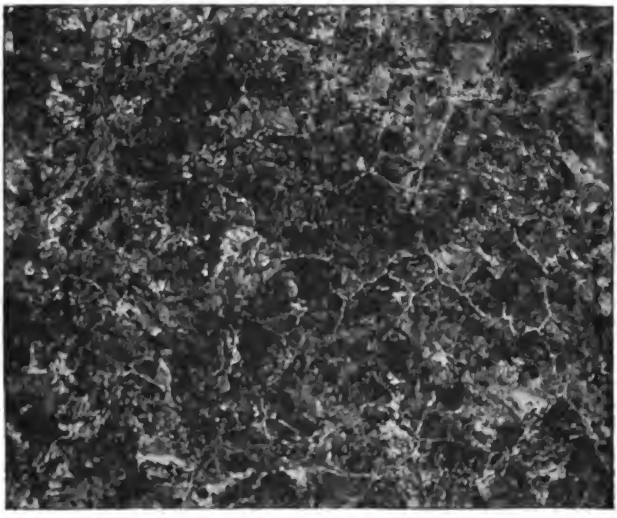

FIG. 52.
1.22% carbon. Pearlite and cementite (white). Magnification 75.

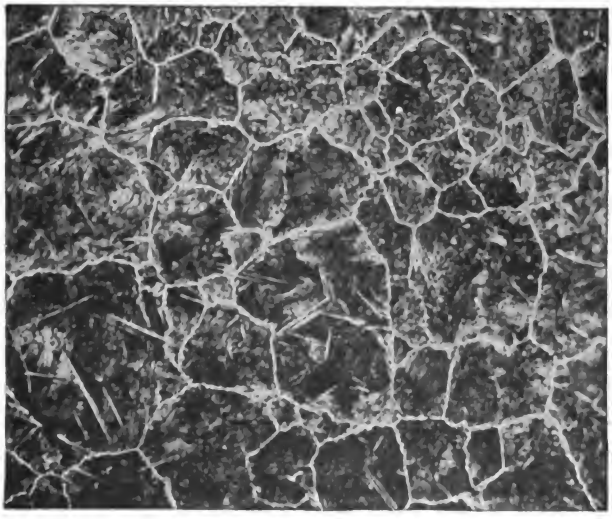

FIG. 53.
1.46% carbon. Pearlite and cementite (white). Magnification 75.

Digitized by Google

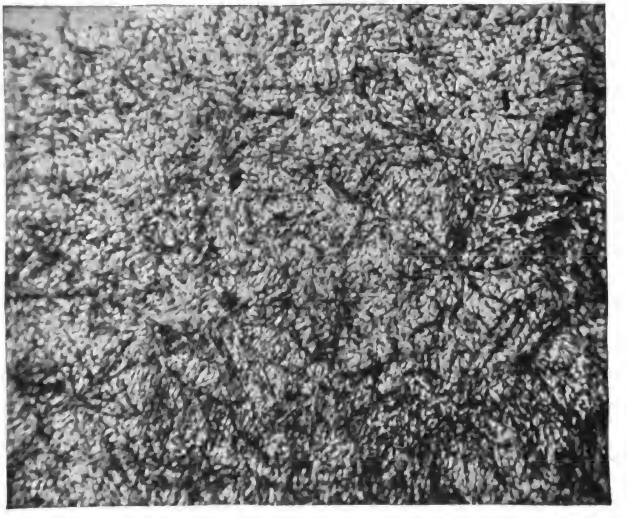

FIG. 54.
Martensite. Magnification 75.

FIG. 55.
Troostite. Magnification 75.

Digitized by Google

treatment is greater as the proportion of carbon in the metal is greater. Thus the low-carbon steels containing from 0.06 to 0.10 per cent of carbon are in general but little affected by heat treatment and are practically incapable of being hardened, while the high-carbon steels and some cast irons are greatly affected and may be given extreme hardness.

The hardness and brittleness induced increase with the rapidity of cooling without limit, but they are apparently nearly inde-

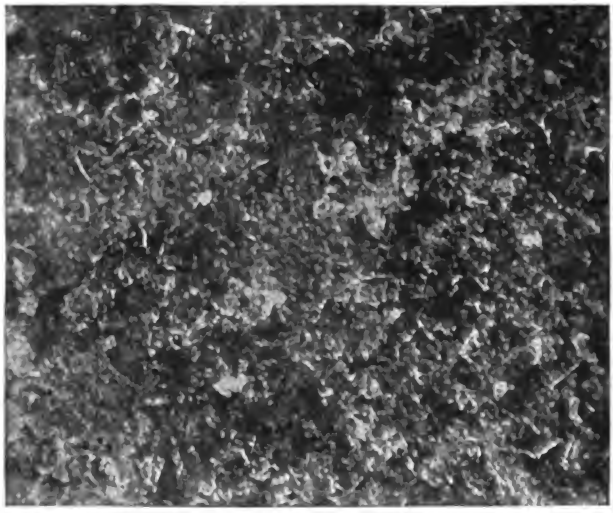

FIG. 56.
Sorbite. Magnification 75.

pendent of the temperature from which the sudden cooling begins, provided that this temperature is above the line of complete transformation, the line *GHDS*, Fig. 47. If the metal is suddenly cooled from temperatures between the beginning and end of the transformation, that is at temperatures between the lines *CDF*, and *GHDS*, the hardening increases as the quenching temperature rises. The range of temperature between the lines *CDF* and *GHDS* is called the ***critical range***. In this range the hardness increases with

Digitized by Google

the quenching temperature, but above the critical range the hardness is independent of the temperature.

The hardening of steel greatly increases its tensile strength and elastic limit, but it makes the steel brittle, thus reducing its toughness, as shown in test pieces by reduced elongation at rupture and diminished contraction of area of cross-section.

The tensile strength of medium-carbon steels increases with the rapidity of cooling.

The following table, taken from *Iron, Steel, and Other Alloys*, by Henry Marion Howe, LL.D., well shows the effects of differences in the rapidity of cooling of steel containing 0.21 per cent of carbon.

Cooled in	Tensile Strength.	Elastic Limit.	Elongation.	Contraction of Area.
	lbs. per sq. in.	lbs. per sq. in.	per cent in 2 in.	per cent.
Iced brine	237,555	237,170	2.0	1.30
Cold water	216,215	.....	1.5	1.67
Oil	174,180	.....	2.9	1.403
Air	86,797	54,342	27.76	57.829
In furnace	80,103	44,221	28.15	54.749

122. Tempering.—Hardened steel is tempered by slight reheating, say to 200° or 300° C. This process lessens the hardness and brittleness of the steel, and thus increases its toughness. The austenite of the hardened steel is in a stable condition only when above the transformation temperature. As the temperature of the steel diminishes the structure tends to change into ferrite and cementite. In the hardening process this tendency is resisted by the frictional resistance due to the sudden cooling, and the structure is retained in an abnormal condition in the cold metal. The reheating of the metal in tempering appears to lessen the molecular rigidity, and to afford opportunity for the structure in part to follow the course that it would have taken in slow cooling through the transformation range and thus to be converted into pearlite and ferrite or cementite. The higher the reheating the more does the change occur.

The rate of cooling after tempering has no effect on the steel,

Digitized by Google

since the highest temperature of reheating has determined how far the change of structure to pearlite and ferrite or cementite may proceed, and no further change can occur at a lower temperature. It is, therefore, immaterial whether the cooling after tempering be slow or rapid.

Tempering has the effect of reducing somewhat the tensile strength and elastic limit of hardened steel, while it increases its toughness, as shown in test specimens by increased elongation at rupture and increased contraction of area of cross-section.

It will be seen that by proper regulation of the temperatures in the processes of hardening and tempering an extensive control of the properties of the metal is obtained, permitting the production of metal of the quality best suited to any particular purpose.

The tempering temperatures may be judged within limits by the color given to the steel, as it is heated, by the various oxides that form successively on the surface before the body of the metal has attained a red heat. When the red color appears it is not the color of the oxide, but the true color of the metal itself at the given temperature.

The following table shows the temperatures at which the colors appear, and the tempering points for steels for various purposes.

220° C.	straw; razors, surgical instruments.
245	yellow; penknives, taps, dies.
255	brown; cold chisels, hatchets.
265	brown with purple spots; axes.
275	purple; table knives, shears.
295	violet; swords, watch springs.
320	blue; saws.
525	incipient red.
700	dark red.
950	bright red.
1100	luminous yellow.
1300	incipient white.
1500	white.

Gun steel is tempered at temperatures between 600° and 675° C.

Digitized by Google

Annealing.—If the steel after being hardened is reheated to the critical temperature and then cooled slowly the austenite is completely converted into pearlite and ferrite or cementite, and the steel reverts to its original condition, losing all its added hardness and brittleness. This process is called *annealing*.

123. Other Substances in Steel.—*Alloy Steels.*—In addition to carbon all steel normally contains, in variable but small quantities, sulphur, phosphorus, manganese and silicon. Of these, sulphur and phosphorus are objectionable if present in too large quantities, sulphur producing hot shortness, that is, brittleness of the metal when hot, and phosphorus producing cold shortness or brittleness when cold.

Manganese and silicon, when present in proper percentages, improve the metal.

Other elements, especially metals, are frequently added to steel to improve its quality. The metals most frequently used for this purpose are nickel, chromium, tungsten and vanadium. Steels containing one or more of these metals are known as alloy steels.

Nickel greatly increases the toughness of steel without reducing the elastic limit. Nickel steel for gun forgings usually contains 3.5% nickel.

Chromium increases the hardness of steel without increasing the brittleness to as great an extent, as would be done by an increase of carbon sufficient to obtain equal hardness.

Forged steel *D* in the table in Art. 109 is a chrome-nickel alloy steel.

Chromium, with or without nickel, is used in steel for armor-piercing projectiles, and in armor. In connection with nickel or vanadium it is used for forgings requiring great strength. In connection with tungsten it is used in machine tools, as will be described below.

Tungsten has much the same effect on steel as chromium. It furthermore gives to steel the remarkable property of hardening in air without special quick cooling. This property is made use of in the production of self-hardening high-speed machine tools. For this purpose chrome-tungsten steel containing as much as 8%

Digitized by Google

chromium and 20% of tungsten is used. No special quick cooling having been used to obtain their hardness, tools made of this metal retain their hardness when cutting at such a rate as to cause them to become visibly red hot.

Vanadium increases the toughness of steel in much the same way as nickel except to a greater extent. In connection with chromium or nickel it increases the elastic limit by a large amount without loss in ductility. The amount used is seldom more than 1%.

Gun Steel.—Of two steels, one high in carbon and the other low in carbon, the steel with the higher percentage of carbon will, with similar treatment, have the higher elastic limit. Since the elastic limit of the metal is the limit of the strength considered in the construction of guns, it would appear that the metal with the highest elastic limit would be the most desirable. But high steel is much more apt to contain flaws, strains and incipient cracks. In addition, after passing the elastic limit high steel has little remaining strength and breaks without warning, while low steel, due to its greater toughness, yields considerably without fracture. For these reasons a medium carbon steel containing about one-half of 1 per cent of carbon is used in the manufacture of guns. When 3% to 3.5% of nickel is used in gun forgings, the percentage of carbon is reduced to about 0.35.

Manufacture of Steel Forgings for Guns

124. Open-hearth Process.—Most gun steel at the present day is made by the open-hearth process, which derives its name from the fact that the receptacle in which the steel is melted is open at the top and exposed to the flame of the fuel, which plays over the surface and performs a principal part in the formation of the steel.

The open-hearth furnace, invented by Dr. Siemens, consists of the following essential parts:

1. The gas producer;
2. The regenerators;
3. The furnace proper.

Digitized by Google

The Gas Producer.—The fuel used in the Siemens furnace is gaseous, and is generally obtained from ordinary fuel by subjecting the fuel to a preliminary process in the gas producer. This apparatus, Fig. 57, consists of a rectangular chamber of firebrick, one side, *B*, being inclined at an angle of from 45° to 60°. *A* is the grate. The fuel, which may be of any kind, is fed into the producer through the hopper *C*. As the fuel slowly burns, the CO_2 rises through the mass above it and absorbs an a dditional portion of C, becoming converted into 2CO. This gas passes out of the opening *D* into a flue. In order to cause it to flow toward the furnace it is led through a long pipe, *E*, where it is partially cooled, and then descends into the pipe *F* leading to the regenerator. The gas in *F* being cooler than that in *E* and *D*, a constant flow of gas from producer to regenerator is maintained.

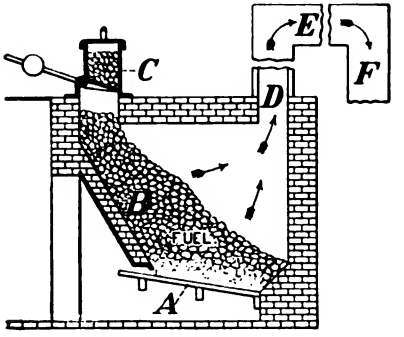

FIG. 57.

Oil is now sometimes used as fuel in place of producer gas. Natural gas is also sometimes used.

The Regenerators.—The gas entering the regenerator is, as has been stated, CO. To burn it to CO_2, air must be mixed with it. This mixture is made in the furnace proper, the CO and air being kept separate till they reach the point where they are to burn. The CO is cooled to some extent, as shown before being admitted to the furnace.

To heat both air and CO before they are mixed and burned, and to accomplish this economically, and raise the gases to a high temperature, the waste heat of the furnace is employed. The heating of the gases is accomplished by means of the regenerators, Fig. 58. They consist of four large chambers, usually placed below the furnace, filled with firebrick. The firebrick is piled so that

Digitized by Google

there are intervals between the bricks to allow the passage of gas and air. When the furnace is started, CO is admitted through *A* and air through *B*, both *A* and *B* being cold. The gases pass between the firebricks in *A* and *B* and through flues at the top, and flow into the furnace proper, where they are lighted. The products of combustion are caused to pass through *C* and *D*, which are similar chambers. In doing so these products heat the firebricks in *C* and *D*. After some time—about one hour generally—by the action of valves controlled by the workmen, the CO and air are caused to enter the furnace through *D* and *C* respectively, and the products of combustion to pass out through *A* and *B*. In this case the CO and air, entering the heated chambers *D* and *C*,

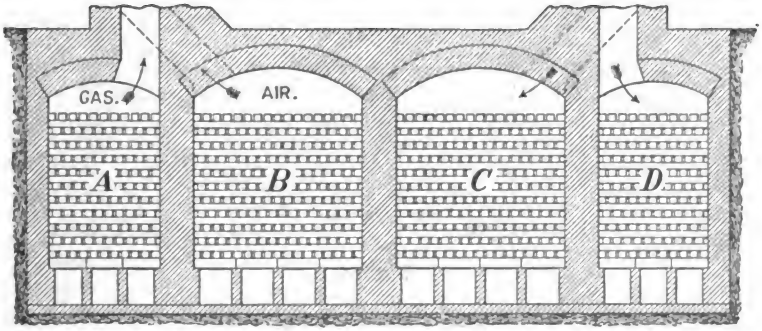

FIG. 58.

are raised to a high temperature before ignition, and the temperature of the furnace is thereby greatly increased. It is also evident that *A* and *B* will be more highly heated than *C* and *D* were, and, therefore, when the next change is made, the gas and air passing through *A* and *B* will be more highly heated than when they passed through *D* and *C*, and so on.

The action of the furnace is, therefore, *cumulative*, and its only limit in temperature is the refractoriness of the material. By regulating the proportions of gas and air, which is readily done, the temperature may be kept constant.

125. The Furnace.—The furnace proper, Fig. 59, is a chamber situated above the regenerating chambers. The dish-shaped cast

Digitized by Google

iron vessel *D*, lined with refractory sand *S*, constitutes the hearth of the furnace. The iron vessel is supported in such a manner that the air may circulate freely around it and keep it from melting. The iron that is to be converted into steel is piled on the hearth of the furnace.

The gaseous fuel and air enter by the flues *F*, and the products of combustion escape by the flues *F'*, or the reverse, according to the position of the regulating valves. The gases are ignited as they enter the furnace. The sloping roof *R*, lined with firebrick, deflects the flames over the metal on the hearth.

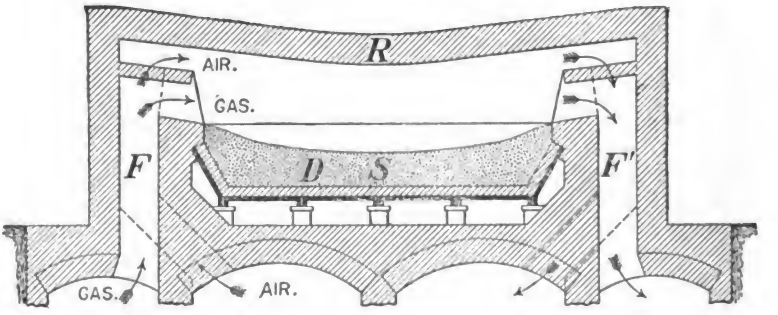

FIG. 59.

At opposite ends of the furnace are a charging door for admission of the metal, and a tap hole, closed with a plug of fireclay, for drawing off the finished steel.

Operation.—The process consists in the decarbonizing of cast iron to the point at which the metal contains only that percentage of carbon that is desired in the steel, and in the partial removal from the iron of those impurities, such as silicon, manganese, and phosphorus, that are injurious to the steel if present in too large quantities.

Pig cast iron is piled on the hearth of the Siemens furnace, and a quantity of steel or wrought-iron scrap is usually added to the charge to reduce the percentage of carbon in the mass.

By the action of the furnace the charge is soon melted. Under the influence of the heat the carbon oxidizes to carbonic oxide gas,

Digitized by Google

which escapes; the silicon oxidizes to silica and the manganese to manganous oxide. The silica and manganous oxide unite with the slag which floats in a thin layer on the molten metal.

In some modern plants molten cast iron is taken directly from the blast furnace, in specially designed cars, and run into the open-hearth. This is known as the " direct-process," and is economical of fuel in that cold pig iron does not have to be melted.

The percentage of carbon in the steel at any stage of the process is determined by taking samples from the metal, cooling them, and observing their fracture on breaking; and by dissolving portions of the specimens in nitric acid and comparing the color with the colors of standard solutions of steel containing different percentages of carbon. In this way the composition of the steel can be exactly regulated, for the metal can be kept in a melted state without damage for a considerable time, and the character of the flame can be made oxidizing or reducing at will, according to the relative amounts of air and CO admitted.

The decarbonizing process is generally continued until the percentage of carbon remaining in the steel is less than the percentage desired. The desired percentage is then obtained by the addition of special pig irons containing a known percentage of carbon, such as spiegeleisen or ferromanganese.

These special pig irons contain also silicon and manganese, a certain amount of each being required in the steel. If it were not for the need of introducing silicon and manganese ordinary pig iron would be added.

Both manganese and silicon act on iron oxide (of which there is bound to be some present in the furnace), removing the oxygen from the iron by carrying it off in the slag as manganese and silicon oxide. Iron oxide in steel is very injurious. Silicon also prevents the distribution of blow holes throughout the ingot, forcing them into the pipe, where they are removed with the discard.

The lining of the hearth, *S*, Fig. 59, is of sand when the iron to be reduced does not contain a harmful percentage of phosphorus. The process is then called the *acid process*, from the silicious or

Digitized by Google

acid nature of the slag. When the iron contains a larger percentage of phosphorus a basic lining, as magnesia or calcined dolomite, is required for the removal of the phosphorus. The slag formed in the basic process is strongly retentive of phosphorus and removes the excess of this substance from the metal.

The reduction of a charge of metal in the Siemens furnace ordinarily takes about eight hours.

When the steel has attained its desired composition the furnace is tapped and the metal cast into ingots.

126. The Duplex Process.—In this process the conversion of the cast iron is begun in an acid converter and finished in a basic open-hearth furnace. The action of the converter is sufficiently described in the text-book on Descriptive Chemistry. Here the silicon and a portion of the carbon are rapidly removed. In the open-hearth furnace the remainder of the carbon and the phosphorus are slowly removed. The advantage of this method is that it permits a better control of the product. The blast furnace may be so managed as to furnish pig iron low in sulphur. This manipulation results in a high percentage of silicon. This will prevent the removal of the phosphorus by use of a basic converter or open-hearth furnace, since the acid silicon would attack the lining. The silicon is removed in the acid converter and there is then nothing to prevent the removal of the phosphorus by the basic open-hearth process.

Other Processes.—The crucible process is used to some extent by Krupp in the production of gun steel. It is not used in this country except for the production of alloy steels for special purposes.

The ingredients of the steel are melted together in crucibles, and the resulting steel is poured from the crucibles into a common reservoir from which the ingots are cast.

The Bessemer Process, though important and producing large quantities of steel, is not used in making gun steel to any great extent, but much of the steel used in gun carriages is made by this process.

Digitized by Google

It is possible that electric furnaces may be developed so as to permit their use for making gun steel.

127. Casting.—The molten metal is drawn into an iron ladle hung from a crane in front of the furnace. The ladle, Fig. 60, is lined with refractory sand. It is provided with trunnions, T', so that it may be tipped for pouring the metal into the mold, or it may have a tap hole, T, in the bottom, closed with a plug of fireclay. The plug is lifted and replaced by means of a rod R, also encased in refractory sand. There is an advantage in drawing the metal from the bottom of the ladle in that the scoria and impurities that float on the surface may be kept out of the mold. The metal, if very hot, is poured slowly into the mold in a thin stream, thus allowing opportunity for escape of the gases that it contains. If at a lower temperature it may be poured more quickly. It is frequently allowed to cool to the desired temperature in the ladle.

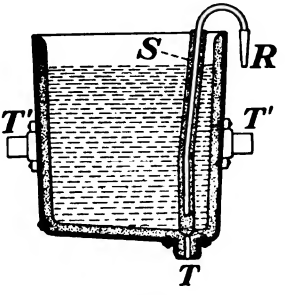

FIG. 60.

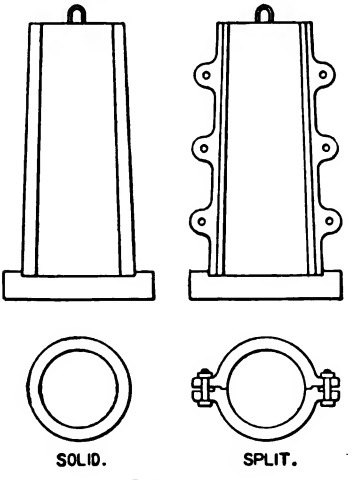

FIG. 61.

Molds.—In the casting of ordinary ingots, the iron or steel molds into which the metal is poured from the ladle are slightly conical in shape, Fig. 61, to facilitate their removal from the ingot. They are of various cross-sections, depending on the shape of the ingot desired. The interior surface is covered with a wash of clay or plumbago.

Sinking Head.—In all castings, whether of iron, steel, or other metal, an excess of metal, called the sinking head, is left at the

Digitized by Google

top of the mold. The pressure due to the weight of this metal gives greater density to the casting. The sinking head also serves to collect the scoria and impurities which rise to the top, and it provides metal to fill any cracks or cavities that may form in the cooling of the ingot.

Defects in Ingots: Blow Holes.—The gases in the melted metal, unable to escape from the mold, form holes in the ingot, called blow holes. These cannot be detected, nor can they be removed by forging, except in low-carbon steel. Forging changes their form only without giving continuity to the metal. Blow holes are more prevalent in Bessemer than in open-hearth steel and are more apt to occur at low temperatures of casting, when the metal hardens before the gas can escape.

Blow holes may be prevented in part by the addition of a slight percentage of silicon or aluminum shortly before the metal solidifies.

Pipes.—The metal in contact with the molds cools first and solidifies. As the cooling and consequent contraction extends toward the center, the liquid metal is drawn away from the center, leaving cavities called pipes along the axis of the ingot. Pipes most frequently occur when the metal is cast too hot. Thus on the one hand too low a temperature causes blow holes and too high a temperature pipes.

Pipes can be made much smaller by retarding the solidification of the upper part of the mold (*a*) by making it of sand which conducts heat more slowly than the metal part of the mold, (*b*) by preheating the upper part of the mold, (*c*) by covering the surface of the molten metal with burning charcoal or molten slag or (*d*) by adding more hot molten metal after the ingot has begun to set.

Segregation.—As the various constituents of the steel (iron, silicon, manganese, etc.) solidify at different temperatures, it frequently happens that they separate from each other as the ingot cools, forming what is called segregation. This gives a different structure to the metal and greatly weakens it. Segregation is more likely to be found toward the center of the ingot and in the upper portions.

Digitized by Google

128. Whitworth's Process of Fluid Compression.—The purpose of this process, invented by Sir Joseph Whitworth of England, is to remove as far as possible the blow holes, pipes, and other defects from the ingot and to give the metal greater solidity and uniformity of structure than can be obtained in the ordinary method of casting. The object is accomplished, to a large extent, by the application of enormous pressure on the metal while in the fluid state in molds so constructed as to allow free escape of the gases.

The flask, *f*, Fig. 62, made of cast steel, is of great strength to withstand the great pressure. It is built up of cylindrical sections which are bolted together to the desired length. The interior of the flask is lined with vertical wrought-iron bars, *b*, whose long edges are cut away or beveled to form channels, *a*, by means of which the gas may escape; the interior and exterior channels thus formed being connected by grooves, *c*, cut in the sides of the bars at short intervals. The cylinder formed by the interior surfaces of the bars is lined with refractory sand. A cast-iron plate, *d*, through which are continued the longitudinal gas channels, closes the mold at the bottom. The mold rests on a car in the bottom of a pit.

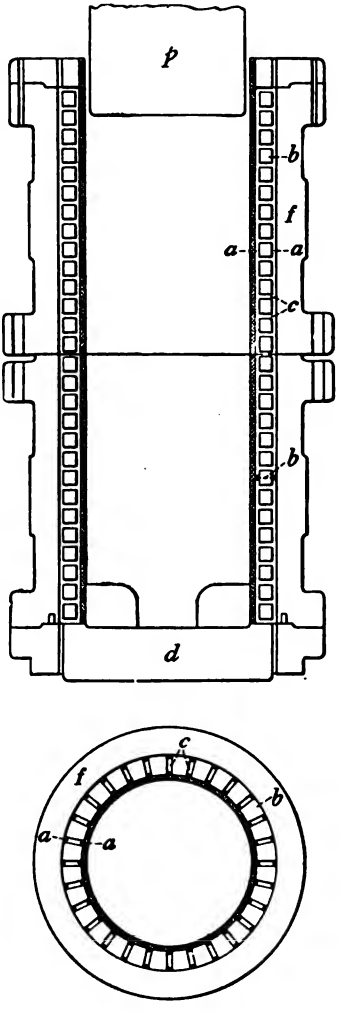

FIG. 62.

When the mold is filled with metal the car is run into a hydraulic

Digitized by Google

press with an adjustable head. The head, *p*, of the press, of diameter only slightly less than the interior of the mold, is brought down against the molten metal and locked in that position. The metal wells up around the head of the press and, quickly cooling, forms a solid mass which with the head completely closes the top of the mold.

The press is constructed with its piston at the bottom so that the pressure may be applied on the bottom of the car that carries the mold.

By the pressure on the bottom of the car, gradually applied until a pressure of six tons to the square inch is reached, the car and mold are slowly forced upward. The molten metal is compressed by the applied pressure, and the gas, forced through the sand lining and the channels between the lining bars, issues from the top and bottom of the mold in a violent flow of flame. The pressure is continued until the column of metal has shortened one-eighth of its length. A uniform pressure of about 1500 lbs. to the square inch is then left on the ingot while it cools, to follow up the metal as it contracts and prevent the formation of cracks.

129. Processes after Casting.—The specifications for gun forgings require that the forgings from open-mold ingots be made from that part of the ingot that remains after 30% by weight has been cut from the top of the ingot and 5% from the bottom. From fluid compressed ingots the corresponding discards are 20% and 3%, respectively.

For hollow forgings the center of the part selected is then bored out in a heavy lathe, or punched out if the ingot is short.

Heating.—The ingot is then heated preparatory to forging. The heating is accomplished in a furnace erected near the forging hammer or press, and is conducted with great care. The cooling of the ingot in the mold has left in the metal strains due to the successive contraction of the interior layers. Assisted by unequal expansion in heating the strains may cause cracks to develop in the ingot. Great care is therefore exercised that the heating shall proceed slowly and uniformly, thus avoiding the overheating of the

Digitized by Google

exterior layers of metal before the heat has thoroughly penetrated to the interior

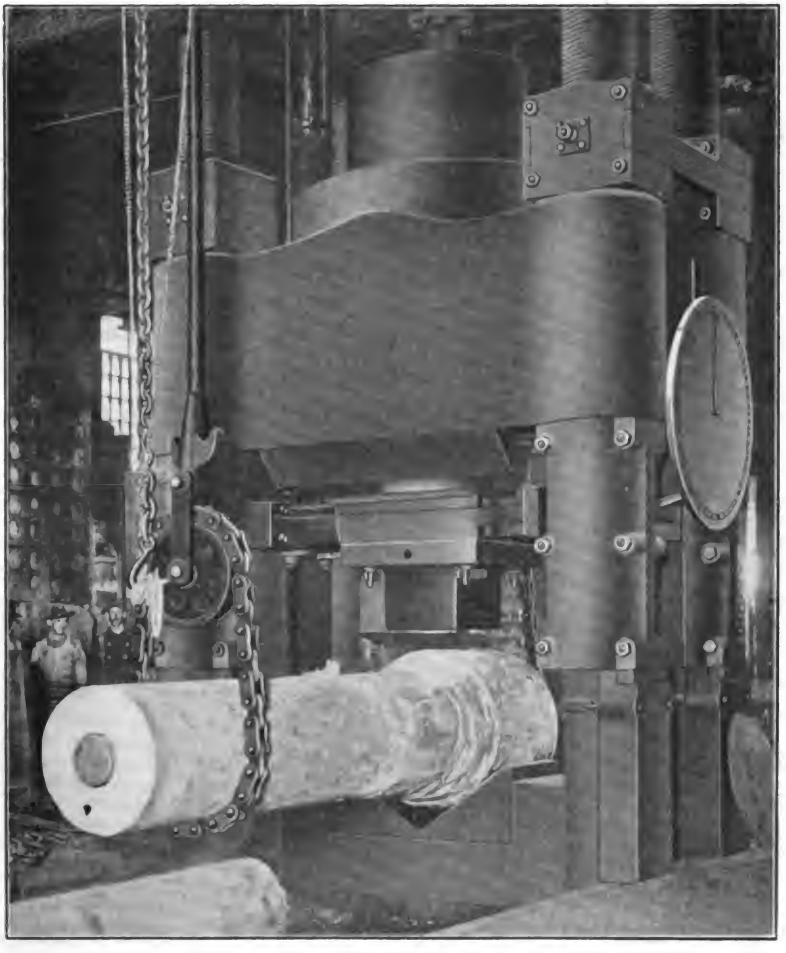

FIG. 63.—5000-ton Hydraulic Forging Press.

Forging.—The heated ingot is forged either by blows delivered by a steam hammer or by pressure delivered by a hydraulic forging press. Under the slow pressure of the forging press the metal

Digitized by Google

of the forging has more time to flow, the effect of the treatment is more evenly distributed, and the metal is more uniformly strained. This process is, therefore, preferred in the manufacture of gun forgings.

Fig. 63 is a reproduction from a photograph of a 5000-ton hydraulic forging press at the works of the Bethlehem Steel Co. The print shows a bored ingot for the tube of a 12-inch gun being forged on a mandrel. The outer diameter of the ingot is reduced by the forging and the length of the ingot increased. The diameter of the bore remains practically unchanged, due to the presence of the mandrel. The outer end of the ingot is supported from an overhead crane.

The ingot is turned on the anvil of the press, and advanced when desired, by means of the chain seen through the press. The method of turning is better shown in the plate following.

The movements of the head of the press are controlled by means of levers situated at a short distance to the right of the press. The operator at the lever sees recorded on the dial the pressure exerted at any instant.

Fig. 64 shows a 10-ton steam hammer forging a solid ingot for a 3-inch gun. The ingot is supported from an overhead crane and is nearly balanced in the sling chain by the bar of iron, called a porter bar, clamped to the ingot and extending to the rear. By bearing down on the porter bar the ingot is lifted off the anvil and may then be moved by the crane back and forth under the hammer. The ingot is turned under the hammer from the crane by means of the gearing shown in the upper part of the picture.

The movements of the hammer are controlled by the man at the left through the levers shown at his hand.

130. Hollow Forgings.—In forging bored ingots a solid steel shaft called a mandrel is passed through the bore of the heated ingot, and the method pursued in forging depends upon whether the length of the ingot is to be increased without change of interior diameter, as in forging a gun tube, or whether the diameters of the ingot are to be enlarged, as in forging hoops. In the first case the

Digitized by Google

FIG. 64.—10-ton Steam Hammer.

Digitized by Google

ingot, on a mandrel of proper diameter, is placed directly on the anvil of the press, as shown in Fig. 63. The effect of forging is then to increase the length of the ingot and decrease the outer diameter while maintaining the interior diameter unchanged. The mandrel is withdrawn from the forging by means of a hydraulic press.

In forging hoops, the mandrel rests on two supports on either side of the head of the press, Fig. 65, and is itself the anvil on which the forging is done. By turning the mandrel new surfaces of the hoop are presented to the press. The walls of the hoop are

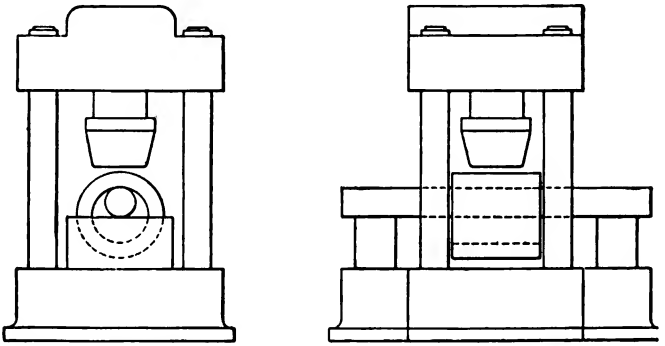

FIG. 65.

reduced in thickness by the forging, the diameters of the hoop being increased, while the length is not materially changed.

The specifications for gun forgings require that the part of a solid ingot used for a gun forging shall have before forging an area of cross-section at least four times as great as the maximum area of cross-section of the finished forging.

If bored ingots are used the wall of the ingot must be reduced at least one-half in thickness.

Annealing.—The working of the ingot in forging and the irregular cooling leaves the metal in a state of strain. The strains are removed by the process of annealing. For this purpose the

Digitized by Google

forging is usually laid in a brick-walled furnace, and slowly and uniformly heated by gas, oil, or wood fires. When the proper heat, usually a bright red, has been attained, the fires are allowed to die out, or are drawn, and the ingot remains in the furnace until both are cold. Three or four days may be required for the slow cooling of a large forging.

With the steel in this soft condition the forging is now rough machined to nearly the finished dimensions.

131. Hardening in Oil or Water.—Annealing removes the internal strains that exist in the forging, but, as before explained, it greatly reduces the tensile strength and elastic limit of the metal. To restore the strength to the metal and to produce in it the qualities required in gun forgings, the forging is next subjected to the process of hardening.

For this purpose the forging is slowly and uniformly heated throughout. Large forgings, such as tubes and jackets, are heated in vertical furnaces, great care being exercised that the heating shall be uniform throughout the length of the piece in order that undue warping may not occur in the subsequent cooling.

The temperature used in the first treatment is determined from the chemical composition of the metal, and that used in subsequent treatments, if any, is determined from the result of the physical tests of specimens taken after the first treatment.

When the desired temperature has been reached the furnace is opened and the forging is lifted out by a crane and immersed in a deep tank of oil or of water alongside the furnace. The oil tank is surrounded by another tank through which cold water is constantly running. The heat of the forging passes to the oil and thence to the water, and is thus gradually conducted away.

The temperature of the forging when immersed is very high compared with that of the oil. The cooling is, therefore, sudden at first, but as oil is a poor conductor of heat the heat of the forging is carried away slowly, leaving the metal with greater toughness than it would have if hardened in water and cooled more quickly.

Oil is customarily used in the hardening of gun forgings. Occa-

Digitized by Google

sionally the qualities of the metal are such that better results are obtained by the quicker cooling in water.

Tempering.—The process of hardening greatly increases the elastic strength of the metal, but reduces its toughness. At the same time it produces internal strains due to contraction in cooling. The strains are removed, the hardness reduced, and the toughness restored by the process of tempering, conducted in the same manner as the previous annealing, but at a lower heat, so that the gain in elastic strength is reduced but slightly and not entirely lost. The tempering temperature for gun forgings lies between 600 and 675° C., 1100 to 1250° F.

Specimens are again taken from the ends of the forging and broken in the testing machine. If the specimens do not fulfill the requirements of the specifications the forging is again hardened and tempered, the temperature and conduct of the processes being so regulated as to improve those qualities in which the metal has proved defective in the tests.

Strength of Parts of Guns.—The requirements in steel forgings for guns are shown in the table in Art. 109. It will be observed that for large guns the strength of the metal increases as we proceed outward from the center of the gun. Thus the elastic limit of the tube is 46,000 lbs., of the jacket 48,000, and of the hoops 53,000. It would be better if the strongest metal were in the tube, which has to endure the greatest strain. But the production of the high qualities required is much more difficult in large forgings than in smaller ones, and for this reason the requirements for the tubes and jackets must be lower than for the hoops.

The tubes and jackets of guns under 8 ins. in caliber have an elastic limit of 50,000 lbs. if made of carbon steel and 65,000 lbs. if made of nickel steel.

In small forgings steel having an elastic limit of over 110,000 lbs. is now produced.

Digitized by Google

CHAPTER VI

GUNS

Elastic Strength of Guns

132. Basic Principle of Gun Construction.—The general subject of elasticity of metals has been discussed in Chapter V. The theory is now to be extended to cover the particular cases of built-up and wire-wrapped guns.

When a tensile or compressive stress is applied to a specimen in a testing machine, a load in one direction only is applied and failure is considered to have occurred when the elastic limit has been passed. The particular stress at the elastic limit is associated with a particular strain and we may consider the failure to have been occasioned by the particular stress or to result from the strain associated therewith. In service the applied loads are much more complex and a particular part of the structure may be subjected to simultaneous tensile, compressive, and shearing loads, each applied in a different direction. As will be shown below, each load modifies the strain produced by every other load and there may be applied stresses in particular directions in excess of the elastic limit as determined by ordinary test, while the resultant strains in these directions remain less than the strain corresponding to the elastic limit so determined; or, the conditions may be such that the applied stress is below the elastic limit and the resultant strain in the same direction is in excess of that corresponding to the elastic limit. The true criterion which determines failure under such complex conditions is somewhat in doubt. In practical gun construction in the United States, the following basic principle is adopted:

No fiber of any part of the gun should be strained beyond the

Digitized by Google

strain corresponding to the elastic limit of the metal as determined by the usual tension and compression tests.

This principle fixes the limit to the stresses to which any part of the gun may be subjected.

133. Strains Perpendicular to the Direction of the Applied Stress.—When a material is subjected to a tensile or compressive stress, there is not only a strain in the direction of the stress, but also a strain in all directions perpendicular to the direction of the applied stress. If the cube in Fig. 66 is subjected to the tensile stress represented by p, the edges aa, bb, etc., parallel to the direction of the applied stress, will be elongated and the edges ab, ac, etc., perpendicular to this direction, will be shortened. The amount of this shortening will be less than the elongation of the edges, aa, etc. The strains in directions perpendicular to the applied stress will always be opposite in character to that in the direction of the stress.

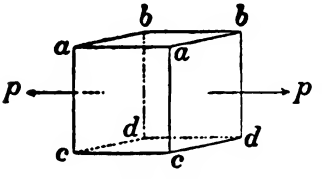

FIG. 66.

The ratio of the unit strain in the perpendicular directions to that in directions parallel to the applied stress is known as Poisson's ratio, and varies for different materials. It is about 0.25 for glass and about 0.43 for lead. It is taken as 1/3 for gun steels.

The volume, and consequently the density, of a body under stress is also in general changed slightly from its volume at rest.

Equations of Relation between Stress and Strain.—If we consider the cube of Fig. 66 to be 1 inch on a side and to be subjected to tensile stresses applied simultaneously in the three directions perpendicular to its faces, the strain in each direction due to the stress in that direction will be diminished by the contrary strains due to the perpendicular stresses.

Let X, Y and Z be the three independent perpendicular tensile stresses applied to the faces of the cube and let l_x, l_y and l_z be the resultant strains in the directions of X, Y and Z, respectively.

Digitized by Google

The tensile strain in the direction of X that would be produced by X acting alone is X/E. This is diminished by the compressive strains in this direction produced by Y and Z. These are $Y/3E$ and $Z/3E$ respectively (E being the modulus of elasticity for gun steels, taken as 30,000,000 in practical work). Similar relations hold in the direction of Y and Z. We have, therefore, for the resultant strains in three directions,

$$\begin{aligned} l_x &= \frac{1}{E}\left(X - \frac{Y}{3} - \frac{Z}{3}\right), \\ l_y &= \frac{1}{E}\left(Y - \frac{Z}{3} - \frac{X}{3}\right) \quad \ldots\ldots \quad (1) \\ l_z &= \frac{1}{E}\left(Z - \frac{X}{3} - \frac{Y}{3}\right). \end{aligned}$$

The tensile stress which, acting alone in the direction of X, would produce the strain l_x is $S_x = El_x$. Similarly, we have $S_y = El_y$ and $S_z = El_z$ as the stresses which, acting alone, would produce the strains l_y and l_z, respectively. These three stresses are also the the stresses which would have to be applied simultaneously to the cube to produce the same deformation as is actually produced by X, Y and Z if no strain was produced by a stress in directions perpendicular to its line of application; that is, if Poisson's ratio were zero. We shall hereafter refer to the product of the actual strain at any point in a given direction by the modulus of elasticity as the *resultant stress* at the point in the given direction; this in order to distinguish between these stresses and the stresses actually applied. The latter will be referred to as applied stresses. Thus X, Y and Z above are *applied stresses* while S_x, S_y and S_z are *resultant stresses*. It should be noted that the only stresses actually existing at a given point are the applied stresses. These applied stresses are associated with certain strains. and it is the product of these strains by the modulus of elasticity, E, that it is found convenient to denote as *resultant stresses*, and whenever this term is used we are really referring to the corresponding strains.

Digitized by Google

With the above in mind, we can restate the basic principle of gun construction as follows:

No fiber of any part of the gun should be subjected to a resultant stress beyond the elastic limit of the metal as determined by the usual tension and compression tests.

134. Conditions which Limit the Maximum Powder Gas Pressure.—If we let θ represent the elastic limit in tension, and ρ the elastic limit in compression, the above principle requires that the resultant stress of every part of the gun be kept between the limits $+\theta$ and $-\rho$. As the powder gas pressure varies, the resultant stresses at any point also vary, but the total variation must not exceed $\theta+\rho$. As will appear later, the limiting point is at the surface of the bore, and if the metal at this point is initially subjected to a resultant compressive stress of $-\rho$ lbs. per sq. in., we may safely permit the interior pressure on firing to have such a value that the resultant stress on this part is changed to a tension of θ lbs. per sq. in. Further than this we cannot go in safety.

It is found that the elastic limit for gun steels in compression is very nearly the same as the elastic limit in tension, and as a matter of practical convenience they are usually considered equal. The elastic limit in tension is the one commonly determined and used. Its determination is easier than the determination of the compressive limit, and, since it is generally lower than the compressive limit, the assumption of an equality is on the side of safety. This assumption will be made in the text below, but θ and ρ will both be retained in order to keep clear the distinction between the two limits. They are opposite in direction, though taken numerically equal.

PROBLEMS

1. A steel test specimen has an elastic limit of 59,000 lbs. per sq. in. What will be its elongation per unit of length at the elastic limit?

Ans. 0.00197 in.

2. The original diameter of the above specimen being 0.505 in., what is its diameter when stretched to the elastic limit? Ans. 0.5047 in.

Digitized by Google

3. A cube of steel 1 in. in each dimension, Fig. 66, is subjected to a tensile load of 30,000 lbs. on the faces *abcd;* to a tensile load of 20,000 lbs. on the faces *aabb* and *ccdd*, and to a compressive load of 10,000 lbs. on the faces *aacc* and *bbdd*. What are the resultant stresses on the respective faces?

On *abcd*, 26,667 lbs. in tension,
On *aabb*, 13,333 lbs. in tension,
On *aacc*, 26,667 lbs. in compression.

135. Principal Stresses and Strains.—It is shown in treatises on the theory of elasticity that there are, in general, three planes through each point of a body under stress, across which the applied stress is normal. These planes are mutually perpendicular, and are called the principal planes at the point in question. The corresponding stresses are known as principal stresses.

The resultant stresses, being either parallel or perpendicular to the applied stresses, are also normal to the principal planes. Thus, in the cube considered above, the applied and resultant stresses at any point are normal to three planes parallel to the faces of the cube, and in general, if the stresses at a point are mutually perpendicular, they are the principal stresses at the point. It may be shown, further, that the greatest and least stress and the greatest and least strain (resultant stress) at any point are principal stresses and principal strains, respectively. Now, under the basic principle assumed above, the greatest strain will determine failure, and since, as will appear below, the applied stresses in the case of a gun are mutually perpendicular, it will be necessary to investigate only the principal stresses and strains in order to completely investigate the gun.

Closed Cylinder under Pressure.—The following discussion of the elastic strength of cylinders is based upon the theory of Claverino, published in 1879, and modified through the results of experiments by Colonel Rogers Birnie, Ordnance Department, U. S. Army. The graphical representation of the relation of pressures and shrinkages of built-up guns was originated by Commander Louis M. Nulton, U. S. Navy.

Digitized by Google

Consider a hollow metal cylinder, closed at both ends and subjected to the uniform pressure of a gas confined within. The pressure acting perpendicularly on the cylindrical walls will tend to compress them radially. If we consider a longitudinal section of the cylinder made by any plane through the axis, the pressure acting in both directions perpendicular to this plane will tend to disrupt or pull apart the cylinder at the section and will therefore produce a tensile stress in the tangential direction on the metal throughout the section. The pressure acting on the ends of the cylinder will tend to pull it apart longitudinally.

The metal of any elementary cube of the cylinder is therefore subjected to three principal applied stresses: a radial stress of compression, a tangential stress of tension, and a longitudinal stress of tension.

If the cylinder be subjected to a uniform exterior pressure, stresses will also be set up. In this case they will be: a longigitudinal stress of compression, a tangential stress of compression, and a radial stress which is always tension at the interior surface of the cylinder, but which may be either tension or compression at the outer surface, depending upon the dimensions of the cylinder. This will be brought out later.

In the following discussion we will always understand by the term stress, the stress per unit of area, and by the term strain, the strain per unit of length, unless these terms are preceded by the word total or other qualifying term.

136. Stresses and Strains in a Closed Cylinder.—Considering the above cylinder,

Let t be the applied tangential stress;

p the applied radial stress;

q the applied longitudinal stress

at any point in the cylinder. These stresses are *applied* in the sense that they are transmitted to the metal at the point under consideration from the metal at adjacent points. t and q will be taken positive when they represent tensions and negative when they represent pressures. p will be taken positive when it repre-

Digitized by Google

sents a pressure and negative when it represents a tension. Strains will be considered positive when they represent elongations and negative when they represent contractions. The notation would be more symmetrical if all positive values represented tensions or elongations and all negative values pressures or contractions. This, however, would involve considering the powder gas pressure as negative. For this reason it has seemed better to follow the classic notation and take the radial applied stresses as positive when they represent pressures.

We shall designate by applied forces the forces actually applied to the cylinder at the surface. These consist only of interior and exterior pressures and are the same as the applied radial stresses at the surface.

Substituting t, p, and q for X, Y, and Z respectively, in Eqs. (1) and changing the sign of p in accordance with our convention, we get:

$$l_t = \frac{1}{E}\left(t + \frac{p}{3} - \frac{q}{3}\right),$$

$$l_p = -\frac{1}{E}\left(p + \frac{q}{3} + \frac{t}{3}\right), \quad \ldots\ldots\ldots \quad (2)$$

$$l_q = \frac{1}{E}\left(q - \frac{t}{3} + \frac{p}{3}\right),$$

where l_t, l_p and l_q are the tangential, radial, and longitudinal strains respectively.

The above equations involve six variables; additional equations are necessary, therefore, to determine the problem. In the case of a gun under any reasonable assumption as to the distribution of the longitudinal applied stress q, its value is small as compared with the tangential and radial stresses.

In the present discussion the applied longitudinal stress will be neglected; that is, q in the above equations will be considered zero. Its actual value, under an assumed law of distribution,

Digitized by Google

will be determined later. Under this assumption the above equations become

$$l_t = \frac{1}{E}\left(t + \frac{p}{3}\right),$$
$$l_p = -\frac{1}{E}\left(p + \frac{t}{3}\right), \quad \ldots\ldots\ldots \quad (3)$$
$$l_a = \frac{1}{E}\left(\frac{p}{3} - \frac{t}{3}\right).$$

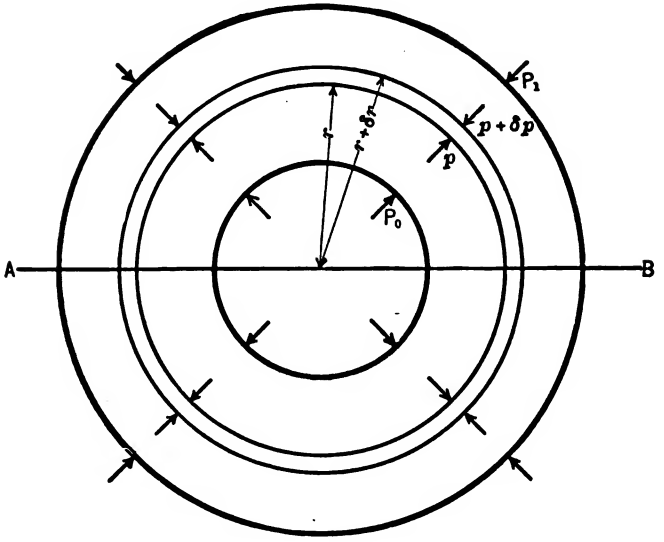

FIG. 67.

137. Relations between the Applied Stresses, p and t.—*Lamé's Laws.*—Consider a right section of a cylinder as in Fig. 67.

Let P_0 be the pressure per sq. in. acting on the interior of the cylinder;

P_1 the pressure per square inch acting on the exterior of the cylinder;

R_0 the interior radius of the cylinder;

R_1 the exterior radius of the cylinder;

r the interior, and $r + \delta r$ the exterior radius of the elementary thin cylinder shown.

Digitized by Google

Suppose the above section to consist of a slice one unit in thickness and let AB be an axial plane cutting the section in two parts.

The inner surface of the elementary cylinder is subjected to a normal pressure, p, transmitted from the cylinder inside whose outer radius is r. Similarly, the outer surface of the elementary cylinder is subjected to a different pressure $p+\delta p$, transmitted from the cylinder outside, whose inner radius is $r+\delta r$. There is also a force, t, acting across the sections of the elementary cylinder made by the axial plane, and resisting any tendency to rupture at these sections. Since the unit slices on either side of the slice under consideration are subjected to exactly the same stresses, they must be expanded or contracted equally, and consequently there can be no shearing forces developed between the slices. Each half-slice must therefore be in equilibrium under the action of the forces, p, $p+\delta p$, and t. The condition for equilibrium is,

$$2pr = 2(p+\delta p)(r+\delta r)+2t\delta r,$$

which reduces to

$$t\delta r = -p\delta r - r\delta p.$$

Dividing this expression by δr, and supposing δr and δp to diminish indefinitely, we obtain,

$$t = -p - r\frac{dp}{dr}.$$

Now, considering the last of Eqs. (3), Lamé, a distinguished investigator on the subject of the elasticity of solid bodies, determined the longitudinal strain l_a to be constant at all points of the cylinder. Making this assumption, we have,

$$p - t = 3El_a = -2A, \quad \ldots\ldots \quad (4)$$

where A is a constant to be determined later.

Digitized by Google

Eliminating t from the above equations and reducing, gives

$$\frac{dp}{p+A}=-\frac{2dr}{r}.$$

Integrating, we have,

$$\log(p+A)=-2\log r+\log B=\log\left(\frac{B}{r^2}\right),$$

where B is a constant of integration.
Hence,

$$p=-A+\frac{B}{r^2}, \quad \ldots\ldots\ldots \quad (5)$$

and by means of (4),

$$t=A+\frac{B}{r^2}, \quad \ldots\ldots\ldots \quad (6)$$

adding the above equations, we get

$$p+t=\frac{2B}{r^2}. \quad \ldots\ldots\ldots \quad (7)$$

From Eqs. (4) and (7) we have Lamé's Laws:

FIRST LAW: *In any section of a cylinder under uniform exterior and interior pressures, the difference between the tangential tension and the radial pressure is the same at all points.*

SECOND LAW: *In any section of a cylinder under uniform exterior and interior pressures, the sum of the tangential tension and the radial pressure varies inversely as the square of the radius.*

138. Applied Stresses in the Cylinder in Terms of Applied Forces P_0 and P_1.—B and A may be evaluated in terms of the applied forces P_0, P_1, and the dimensions R_0 and R_1 as follows: Since Eq. (5) is true for any corresponding values of p and r, it is true for the particular values P_0, R_0, and P_1 and R_1, and we have

$$P_0=-A+\frac{B}{R_0^2},$$

$$P_1=-A+\frac{B}{R_1^2}.$$

Digitized by Google

Solving the above two simultaneous equations for A and B, we have,

$$A = \frac{P_0R_0^2 - P_1R_1^2}{R_1^2 - R_0^2},$$

and

$$B = \frac{R_0^2R_1^2}{R_1^2 - R_0^2}(P_0 - P_1).$$

Substituting these values in (5) and (6) above, we get,

$$p = -\frac{P_0R_0^2 - P_1R_1^2}{R_1^2 - R_0^2} + \frac{R_0^2R_1^2(P_0 - P_1)}{R_1^2 - R_0^2}\frac{1}{r^2}, \quad . \quad . \quad . \quad (8)$$

$$t = \frac{P_0R_0^2 - P_1R_1^2}{R_1^2 - R_0^2} + \frac{R_0^2R_1^2(P_0 - P_1)}{R_1^2 - R_0^2}\frac{1}{r^2}. \quad . \quad . \quad . \quad (9)$$

Resultant Stresses in the Cylinder.—Substituting the above values of p and t in Eqs. (3), we get for the resultant stresses at any point whose distance from the axis of the cylinder is r,

$$S_t = El_t = \frac{2}{3}\frac{P_0R_0^2 - P_1R_1^2}{R_1^2 - R_0^2} + \frac{4}{3}\frac{R_0^2R_1^2(P_0 - P_1)}{R_1^2 - R_0^2}\frac{1}{r^2}, \quad . \quad . \quad (10)$$

$$S_p = El_p = \frac{2}{3}\frac{P_0R_0^2 - P_1R_1^2}{R_1^2 - R_0^2} - \frac{4}{3}\frac{R_0^2R_1^2(P_0 - P_1)}{R_1^2 - R_0^2}\frac{1}{r^2}, \quad . \quad . \quad (11)$$

$$S_q = El_q = -\frac{2}{3}\frac{P_0R_0^2 - P_1R_1^2}{R_1^2 - R_0^2}. \quad . \quad . \quad . \quad . \quad . \quad . \quad . \quad . \quad (12)$$

139. Discussion of Equations.—Eqs. (8), (9), (10), (11), and (12) are the fundamental equations of gun construction on which all others are based. Eq. (8) gives the applied radial pressure existing in the metal at the radius r when the applied pressures P_0 and P_1 are acting on the interior and exterior of the cylinder. A careful examination of Eq. (8) will show that p is always positive, that is, is always a pressure. Eq. (9) gives the applied tangential tension at the radius r when the applied pressures

Digitized by Google

P_0 and P_1 are acting. A negative value for t means that the tangential applied force is a compression instead of a tension.

Eqs. (10), (11), and (12) give, respectively, the tangential, radial and longitudinal resultant stresses caused by P_0 and P_1. These stresses are not actually existing quantities. What actually exists is a state of strain whose components in the respective directions are l_t, l_p, and l_q. It is convenient to multiply each of these components by the modulus of elasticity E, and refer to the resulting products, S_t, S_p, and S_q as *resultant stresses*. Positive values of these quantities denote resultant tensions and negative values resultant compressions.

Practice differs as to the criterion of failure to be adopted. In our service, both Army and Navy, failure is considered to occur when the actual strain at any point exceeds the strain at the elastic limit as determined by ordinary tensile and compressive tests; or, what is the same thing, when the resultant stress at any point exceeds the actual stress at the elastic limit as similarly determined. That is, algebraically, we must have for safety, $\theta \gtreqless S_t \gtreqless -\rho$, and similarly for S_p and S_q.

In the English Service, failure is considered to occur when the applied stress in the metal exceeds the actual stress at the elastic limit as determined by ordinary tensile or compressive tests. That is, algebraically, the following equation must hold for safety: $\theta \gtreqless t \gtreqless -\rho$, and similarly for p and q.

In the following discussion, the criterion of the U. S. Service will be adhered to.

140. Distribution of Resultant Stresses in Cross-section of a Simple Cylinder.—By the term simple cylinder is understood a cylinder which is made in one piece and which does not contain any strains due to forging or heat treatment.

Three cases to be considered.—In such a cylinder forming a part of a gun, we have three cases to consider. There may be a pressure on the interior of the cylinder and none on the exterior, the atmospheric pressure being considered zero. There may be a pressure on the exterior of the cylinder and none on the interior.

Digitized by Google

Or, both exterior and interior pressures may be acting at once, the interior pressure being usually greater. We will consider the simple cylinder under these circumstances.

Differentiating Eq. (10), we obtain,

$$\frac{dS_t}{dr} = -\frac{8}{3}\frac{R_0^2 R_1^2 (P_0 - P_1)}{R_1^2 - R_0^2}\frac{1}{r^3}, \quad \ldots \quad (13)$$

and differentiating again,

$$\frac{d^2 S_t}{dr^2} = \frac{8 R_0^2 R_1^2 (P_0 - P_1)}{R_1^2 - R_0^2}\frac{1}{r^4}. \quad \ldots \quad (14)$$

Similarly, from Eq. (11), we obtain,

$$\frac{dS_p}{dr} = \frac{8}{3}\frac{R_0^2 R_1^2 (P_0 - P_1)}{R_1^2 - R_0^2}\frac{1}{r^3}, \quad \ldots \quad (15)$$

$$\frac{d^2 S_p}{dr^2} = -\frac{8 R_0^2 R_1^2 (P_0 - P_1)}{R_1^2 - R_0^2}\frac{1}{r^4}. \quad \ldots \quad (16)$$

First Case.—*Interior Pressure Only.*—This is the case of a gun consisting of a single forging and of the jacket or outside hoops of a built-up gun. Making $P_1 = 0$, we get from Eqs. (10), (11), and (12), using the subscript P_0 to indicate that this is the only pressure acting

$$S_{tP_0} = \frac{2}{3}\frac{P_0 R_0^2}{R_1^2 - R_0^2} + \frac{4}{3}\frac{P_0 R_0^2 R_1^2}{R_1^2 - R_0^2}\frac{1}{r^2}, \quad \ldots \quad (17)$$

$$S_{pP_0} = \frac{2}{3}\frac{P_0 R_0^2}{R_1^2 - R_0^2} - \frac{4}{3}\frac{P_0 R_0^2 R_1^2}{R_1^2 - R_0^2}\frac{1}{r^2}, \quad \ldots \quad (18)$$

$$S_{qP_0} = -\frac{2}{3}\frac{P_0 R_0^2}{R_1^2 - R_0^2}. \quad \ldots \quad (19)$$

Since S_{tP_0} in Eq. (17) is positive for any value of r, the resultant tangential stress is one of tension throughout the cylinder. S_{tP_0}

Digitized by Google

has its highest value when r has its least value, or when $r = R_0$. The resultant tangential stress is therefore greatest at the inside surface of the cylinder, decreasing as we proceed outward and reaching its least value at the outside surface of the cylinder where $r = R_1$. Furthermore, as the second differential coefficient, Eq. (14) is positive for all values of r, (when $P_1 = 0$), the graph of the resultant tangential stress as a function of r is concave upward.

Similarly, since S_{pP_0} is negative for all values of r, Eq. (18) shows that the resultant radial stress is one of compression throughout the cylinder. It has its highest numerical value when $r = R_0$,

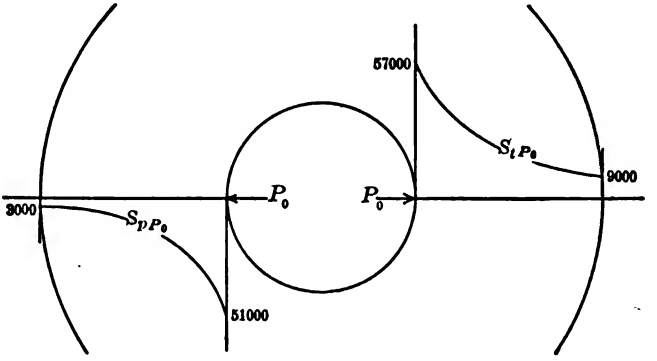

FIG. 68.

and its least numerical value when $r = R_1$, showing that the resultant radial stress, like the resultant tangential stress, is greatest at the inside and least at the outside surface of the cylinder.

The second differential coefficient, Eq. (16), being negative for all values of r (when $P_1 = 0$), the graph of the resultant radial stress as a function of r is concave downward, the graphs of (17) and (18) are shown plotted in Fig. 68, for $P_0 = 36{,}000$ lbs. per sq. in., and $R_1 = 3R_0$.

It is evident from the equations that the values of S_{tP_0}, S_{pP_0}, and S_{qP_0}, at the inner and outer surfaces depend upon the ratio of R_1 to R_0 and not on the absolute values of these radii.

Digitized by Google

141. Limiting Value of Interior Pressure Acting Alone.—The equations show that, at any point in the section, S_{tP_0} is always greater than S_{rP_0} and that the latter is equal to or greater than $S_{\theta P_0}$. When the elastic limits of the metal for tension and compression are assumed equal, failure, if it occurs, will therefore be due to the highest value of S_{tP_0}, shown to be at the inside surface of the cylinder, exceeding numerically the elastic limit, θ, for tension.

The limit of safe interior pressure will, therefore, be given by Eq. (17) under the following assumptions,

$$r = R_0, \quad S_{tP_0} = S_{tP_0R_0} = \theta.$$

Making these substitutions and solving for the corresponding value of P_0 now represented by $P_{0\theta}$, we have,

$$P_{0\theta} = \frac{3}{2}\frac{(R_1^2 - R_0^2)}{(R_0^2 + 2R_1^2)}\theta. \quad \ldots\ldots \quad (20)$$

If the cylinder is one caliber thick, $R_1 = 3R_0$, and

$$P_{0\theta} = 0.63\theta.$$

If the cylinder has infinite thickness, $R_1 = \infty$, and

$$P_{0\theta} = 0.75\theta.$$

It follows, therefore, that the greatest possible safe value for an interior pressure acting alone in a simple cylinder is three-fourths the elastic limit of the material of the cylinder in tension and, further, that very little benefit is to be obtained by increasing the thickness of the walls of the cylinder beyond one caliber.

Thickness of Wall.—The required thickness of wall of cylinder, $R_1 - R_0$, to withstand a given interior pressure $P_{0\theta}$ may be

Digitized by Google

obtained by solving Eq. (20) for R_1 and then subtracting R_0. Its value is,

$$R_1 - R_0 = R_0\left(\sqrt{\frac{3\theta + 2P_{0\theta}}{3\theta - 4P_{0\theta}}} - 1\right). \quad . \quad . \quad . \quad . \quad (21)$$

For a given interior pressure and elastic limit the thickness of wall is therefore proportional to the inside radius.

PROBLEMS

1. What is the maximum permissible interior pressure on a steel gun hoop the interior diameter of which is 20 ins. and the exterior diameter 28 ins., the elastic limit of the metal being 60,000 lbs. per sq. in.?

Ans. 17,561 lbs. per sq. in.

2. The steel tubes of a water-tube boiler are 2 ins. in interior diameter and 2.4 ins. in exterior diameter. The elastic limit of the metal is 30,000 lbs. per sq. in. What is the limiting interior water pressure?

Ans. 5103.2 lbs. per sq. in.

3. Using a factor of safety of 1½, what is the limiting interior pressure in a compressed air tank with interior and exterior diameter of 15 and 17 ins. respectively? The elastic limit of the metal is 30,000 lbs. per sq. in.

Ans. 2391 lbs. per sq. in.

4. The 6-in. wire-wound gun has the following dimensions at the powder chamber: $R_0 = 4.5$ ins., $R_1 = 12$ ins. If the gun were constructed of a single forging with an elastic limit of 60,000 lbs. per sq. in. what would be the maximum permissible powder pressure? Ans. 36,132 lbs. per sq. in.

5. A boiler 6 ft. in interior diameter is required to withstand a steam pressure of 350 lbs. per sq. in. What is the maximum thickness required in the shell? The elastic limit of the metal is 20,000 lbs. per sq. in.

Ans. 0.64 in.

6. The cylinder of a hydraulic jack has an interior diameter of 10 ins. and a maximum working pressure of 10,000 lbs. per sq. in. What thickness of wall is required in order that the factor of safety may be 1½? The elastic limit of the metal is 40,000 lbs. per sq. in. Ans. 2.9 ins.

142. Second Case. Exterior Pressures Only.—This is the case of the tube of a built-up gun while at rest. Making $P_0 = 0$, we get from Eqs. (10), (11), and (12),

$$S_{tP_1} = -\frac{2}{3}\frac{P_1 R_1^2}{R_1^2 - R_0^2} - \frac{4}{3}\frac{P_1 R_0^2 R_1^2}{R_1^2 - R_0^2}\frac{1}{r^2}, \quad . \quad . \quad . \quad (22)$$

Digitized by Google

$$S_{pP_1} = -\frac{2}{3}\frac{P_1 R_1^2}{R_1^2 - R_0^2} + \frac{4}{3}\frac{P_1 R_0^2 R_1^2}{R_1^2 - R_0^2}\frac{1}{r^2}, \quad . \quad . \quad . \quad (23)$$

$$S_{tP_1} = \frac{2}{3}\frac{P_1 R_1^2}{R_1^2 - R_0^2}. \quad . \quad . \quad . \quad . \quad . \quad . \quad . \quad . \quad . \quad (24)$$

Since S_t is negative for all values of r, the resultant tangential stress is one of compression throughout the bore. The equation shows that its greatest numerical value is at the inside surface of the bore where $r = R_0$, and that its graph as a function of r is concave downward.

Making $r = R_0$ in Eq. (23), we get,

$$S_{pP_1R_0} = \frac{2}{3}\frac{P_1 R_1^2}{R_1^2 - R_0^2}, \quad . \quad . \quad . \quad . \quad . \quad . \quad . \quad (25)$$

showing that the resultant radial stress at the inside surface of the cylinder is always one of tension. On the other hand, if we make $r = R_1$, we get

$$S_{pP_1R_1} = -\frac{2}{3}\frac{P_1(R_1^2 - 2R_0^2)}{R_1^2 - R_0^2}, \quad . \quad . \quad . \quad . \quad . \quad (26)$$

which is positive when

$$R_1 < \sqrt{2}R_0;$$

negative when

$$R_1 > \sqrt{2}R_0;$$

and which vanishes when

$$R_1 = \sqrt{2}R_0.$$

That is, the resultant radial stress at the outside surface of the cylinder may be either tension or compression, depending upon the relative values of R_0 and R_1.

Comparison of the values of $S_{pP_1R_0}$ and $S_{pP_1R_1}$ shows that the resultant radial stress of tension on the inside surface of the cylinder is always numerically greater than the resultant radial stress (compression or tension) on the outside surface.

The graph of S_{pP_1} as a function of r is concave upward.

Digitized by Google

The graphs of (22) and (23) are shown plotted in Fig. 69 for $P_1 = 36{,}000$ lbs. per sq. in., and $R_1 = 3R_0$.

143. Limiting Value of Exterior Pressure Acting Alone.—The equations show that at any point in the cylinder S_{tP_1} is always numerically greater than S_{pP_1}, and that at the inside surface, where its highest value occurs, the latter is numerically greater than $S_{\theta P_1}$. When the elastic limits of the metal for tension and compression are assumed equal, failure, if it occurs, will therefore be due to the highest value of S_{tP_1}, shown to be at the inside surface of the cylinder, exceeding numerically the elastic limit ρ,

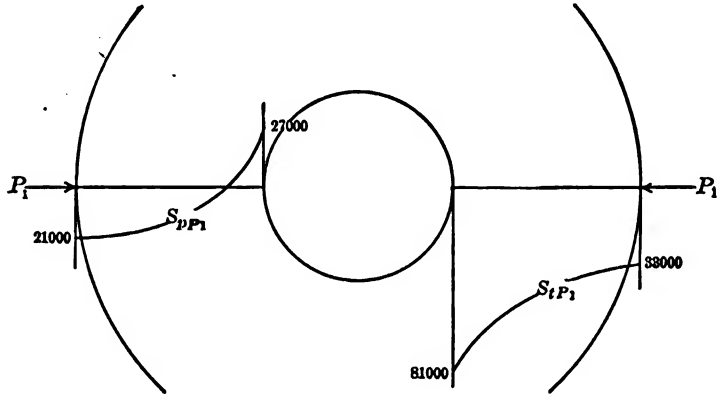

FIG. 69.

for compression. The limit of safe exterior pressure will therefore be given by Eq. (22) under the following assumptions.

$$r = R_0, \quad S_{tP_1} = S_{tP_1R_0} = -\rho.$$

Making these substitutions, and solving for P_1, now represented by $P_{1\rho}$, we obtain,

$$P_{1\rho} = \frac{1}{2}\frac{R_1^2 - R_0^2}{R_1^2}\rho. \quad . \quad . \quad . \quad . \quad . \quad . \quad (27)$$

If the cylinder is one caliber thick,

$$R_1 = 3R_0 \quad \text{and} \quad = P_{1\rho} = 0.44\rho.$$

Digitized by Google

If the cylinder has infinite thickness,

$$P_{1_\rho} = 0.50\rho.$$

Here again it is seen that there is comparatively little advantage to be gained by making the cylinder of a greater thickness than one caliber.

Thickness of Wall.—The thickness of wall required to withstand a given exterior pressure may be obtained from Eq. (27) by solving for R_1 and subtracting R_0. The required thickness is

$$R_1 - R_0 = R_0\left(\sqrt{\frac{\rho}{\rho - 2P_{1_\rho}}} - 1\right). \quad . \quad . \quad . \quad . \quad (28)$$

As with interior pressure, for given values of elastic limit and exterior pressure, the thickness of wall is proportional to the interior radius.

These equations do not take into account the tendency of thin tubes to fail under exterior pressure by flattening. This tendency has no relation to the problem of gun construction, and will not be discussed in this text.

PROBLEMS

1. An iron tube 3 ins. in diameter is subjected to exterior pressure, 1326.5 lbs. per sq. in. What must be the exterior diameter of the tube in order that it may safely withstand the pressure? The elastic limit of the metal is 20,000 lbs. per sq. in. Ans. 3.25 ins.

2. A cylinder 4 ins. in interior diameter and 9 ins. in exterior diameter is subjected to an exterior pressure of 40,000 lbs. per sq. in. What must be the elastic limit of the metal in order that the cylinder may not receive a permanent set? Ans. 99692.

144. THIRD CASE. **Both Interior and Exterior Pressures.**—This is the case of the tube, jacket, and hoops of a gun in action (except exterior hoops). The resultant stresses at any point of a given cross-section may be calculated from Eqs. (10) and (11). An inspection of these equations and Eqs. (17), (18), (22), and (23) will show that the resultant stresses are the algebraic sums

Digitized by Google

of those set up by the given interior and exterior pressures considered acting alone. In Fig. 70 the resultant stresses due to $P_0 = P_1 = 36{,}000$ lbs. per sq. in. ($R_1 = 3R_0$) calculated by Eqs. (10) and (11), are shown. S_{tP_0} and S_{pP_0} are the resultant stresses

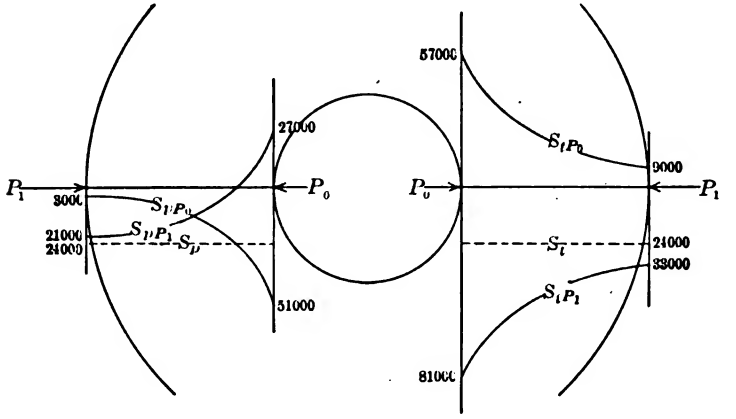

FIG. 70.

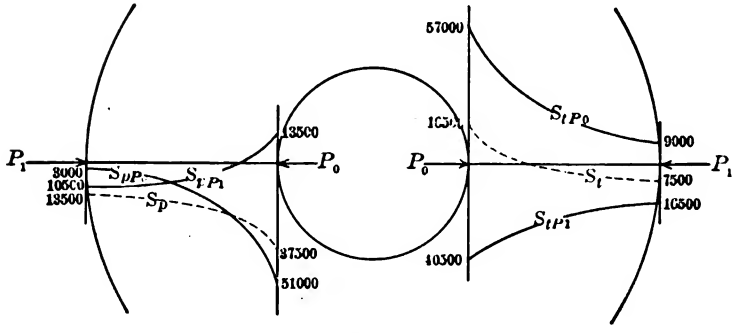

FIG. 71.

due to P_0 alone, calculated from Eqs. (17) and (18); S_{tP_1} and S_{pP_1} are those due to P_1 alone, calculated from Eqs. (22) and (23). The algebraic sums or final resultant stresses are S_t and S_p respectively.

Similar curves for $P_0 = 36{,}000$ lbs. per sq. in. and $P_1 = 18{,}000$ lbs. per sq. in. are shown in Fig. 71.

Digitized by Google

The positions of the curves of final resultant stresses from interior and exterior pressures acting together will, of course, depend upon the relative values of the two pressures. In Fig. 70 the interior and exterior pressures are equal, while in Fig. 71 the interior pressure is twice the exterior pressure.

An inspection of these figures shows at once that the resultant stresses, both tangential and radial, set up in a cylinder by the action of an interior pressure, may be greatly reduced if an exterior pressure is caused to act at the same time. Similarly the resultant stresses caused by an exterior pressure may be reduced if an interior pressure is caused to act at the same time.

145. Limiting Interior Pressures. Exterior Pressures Acting.— The resultant tangential and also the resultant radial stresses produced by either an interior or an exterior pressure acting alone are always numerically highest at the inside surface of the cylinder. The stresses produced by an interior pressure are usually of opposite sign from those produced by an exterior pressure. It follows from this that when both interior and exterior pressures act, the numerical values of the final resultant stresses will, in general, be highest at the inside or outside surface of the cylinder, depending upon the values of the interior and exterior pressures and upon the relative dimensions of the radii of the cylinder. In the special case when $P_0 = P_1$ the resultant stresses are constant throughout the walls of the cylinder and numerically equal to each other, as may be seen from Eqs. (10), (11), and (12).

When the interior and exterior pressures produce resultant stresses at the inner or outer surfaces of the cylinder between the respective elastic limits of tension and of compression, the cylinder will be safe throughout. When the resultant stress at one of these points equals the elastic limit of the metal for tension or compression we have reached the limit of interior or exterior pressure, as the case may be.

We will consider separately the cases in which the resultant tangential stress reaches one of the elastic limits, and those in which the resultant radial stress reaches one of the elastic limits.

Digitized by Google

146. When Resultant Tangential Stress Reaches Elastic Limit.—As outlined above, there are four important cases to consider.

1. The tangential stress may reach the tensile elastic limit at the interior surface of the cylinder, or we may have in Eq. (10),

$$r = R_0 \quad \text{and} \quad S_t = S_{tR_0} = \theta.$$

2. It may reach the compressive elastic limit at the same surface, or

$$r = R_0 \quad \text{and} \quad S_t = S_{tR_0} = -\rho.$$

3. It may reach the tensile elastic limit at the outer surface, or,

$$r = R_1 \quad \text{and} \quad S_t = S_{tR_1} = \theta.$$

4. It may reach the compressive elastic limit at this surface, or

$$r = R_1 \quad \text{and} \quad S_t = S_{tR_1} = -\rho.$$

Making these substitutions in Eq. (10), and transforming the equations in order to get P_0 as a function of P_1, we get,
when $S_{tR_0} = \theta$,

$$P_0 = \frac{6R_1^2P_1 + 3(R_1^2 - R_0^2)\theta}{4R_1^2 + 2R_0^2}; \quad \ldots\ldots\ldots \quad (29)$$

when $S_{tR_0} = -\rho$,

$$P_0 = \frac{6R_1^2P_1 - 3(R_1^2 - R_0^2)\rho}{4R_1^2 + 2R_0^2}; \quad \ldots\ldots\ldots \quad (30)$$

when $S_{tR_1} = \theta$,

$$P_0 = \frac{(2R_1^2 + 4R_0^2)P_1 + 3(R_1^2 - R_0^2)\theta}{6R_0^2}; \quad \ldots\ldots \quad (31)$$

when $S_{tR_1} = -\rho$,

$$P_0 = \frac{(2R_1^2 + 4R_0^2)P_1 - 3(R_1^2 - R_0^2)\rho}{6R_0^2}. \quad \ldots\ldots \quad (32)$$

These equations are all linear in P_0 and P_1. Their graphs are therefore right lines.

Inspection shows that when θ and ρ are numerically equal,

Digitized by Google

the graph of (29) is parallel to that of (30) and equally distant from the origin and similarly that the graph of (31) is parallel to that of (32) and equally distant from the origin.

The graphs are shown plotted in Fig. 72 for a cylinder, the walls of which are one caliber thick ($R_1 = 3R_0$) and for which $\theta = \rho = 50{,}000$ lbs. per sq. in. It is evident that any set of values of P_0 and P_1 corresponding to a point of any of these graphs, will, if actually applied to the cylinder, produce a corresponding tangential resultant stress equal to the elastic limit.

Any set of pressures which plot above the lines marked $S_{tR_0} = \theta$, and $S_{tR_1} = \theta$ are safe as far as those particular resultant tangential

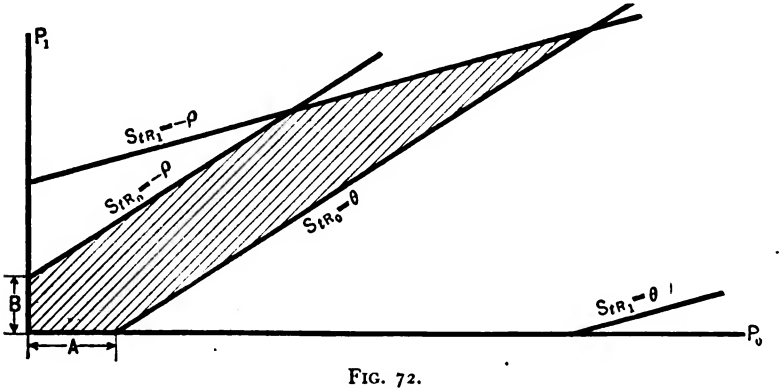

FIG. 72.

stresses are concerned, and similarly, any set of pressures which plot below the lines $S_{tR_0} = -\rho$, and $S_{tR_1} = -\rho$ are safe as far as those resultant stresses are concerned. Therefore, any set of pressures which plot in the shaded area will be safe as far as any of the four resultant tangential stresses we have considered are concerned, and since, as we have previously shown, one of these four resultant stresses is the highest produced in the cylinder by the interior and exterior pressures, the cylinder will be safe throughout, as far as tangential resultant stresses are concerned.

Any set of values outside the shaded area will stress some part of the cylinder beyond the tangential elastic limit and will therefore be unsafe.

Digitized by Google

Eq. (31), the third case, would become of importance only if its graph should form one of the bounding lines of the shaded area, and to do this it would have to intersect the graph of Eq. (29) for positive values of P_0 and P_1. By combining Eq. (29) and (31) we may show that it is not possible for their graphs to intersect for positive values of both P_0 and P_1, that is, any set of interior and exterior pressures which cause the resultant tangential stress at the outside surface of the cylinder to reach the elastic limit for tension will cause the resultant tangential stress at the inside surface to exceed that elastic limit. Case (3) corresponding to Eq. (31) is therefore eliminated from further consideration.

When $P_1 = 0$, P_0 has the value indicated by "A". A is therefore the maximum interior pressure that the cylinder is capable of withstanding, as far as tangential stress is concerned, if no outside pressure is acting. Similarly "B" is the maximum outside pressure that the cylinder is capable of withstanding if there is no inside pressure acting. The values of "A" and "B" have already been deduced. (See Eqs. (20) and (27.))

147. When Resultant Radial Stress Reaches Elastic Limit.— As in the case of resultant tangential stress, there are four cases to consider. The radial resultant stress may reach the tensile elastic limit at the inner surface of the cylinder, or we may have in Eq. (11),

$$r = R_0 \quad \text{and} \quad S_p = S_{pR_0} = \theta,$$

or it may reach the compressive elastic limit at the same surface, or,

$$r = R_0 \quad \text{and} \quad S_p = S_{pR_0} = -\rho.$$

or it may reach the tensile elastic limit at the outer surface, or,

$$r = R_1 \quad \text{and} \quad S_p = S_{pR_1} = \theta,$$

or it may reach the compressive elastic limit at this surface, or,

$$r = R_1 \quad \text{and} \quad S_p = S_{pR_1} = -\rho.$$

Digitized by Google

Making the above substitutions in Eq. (11) and transforming the equations in order to get P_0 as a function of P_1, we get, when $S_{pR_0} = \theta$,

$$P_0 = -\frac{3(R_1^2 - R_0^2)\theta - 2P_1R_1^2}{4R_1^2 - 2R_0^2}, \quad \ldots\ldots\ldots \quad (33)$$

when $S_{pR_0} = -\rho$,

$$P_0 = \frac{3(R_1^2 - R_0^2)\rho + 2P_1R_1^2}{4R_1^2 - 2R_0^2}, \quad \ldots\ldots\ldots \quad (34)$$

when $S_{pR_1} = \theta$,

$$P_0 = -\frac{3(R_1^2 - R_0^2)\theta - (2R_1^2 - 4R_0^2)P_1}{2R_0^2}, \quad \ldots\ldots \quad (35)$$

when $S_{pR_1} = -\rho$,

$$P_0 = \frac{3(R_1^2 - R_0^2)\rho - (2R_1^2 - 4R_0^2)P_1}{2R_0^2}. \quad \ldots\ldots \quad (36)$$

These equations are all linear in P_0 and P_1.

It is apparent from inspection that the graph of (33) is parallel to that of (34) and equally distant from the origin and similarly the graph of (35) is parallel to that of (36) and equally distant from the origin. The graphs of (33), (34), and (36) are shown plotted in Fig. 73 for a cylinder the walls of which are one caliber thick ($R_1 = 3R_0$), and for which $\theta = \rho = 50{,}000$ lbs.

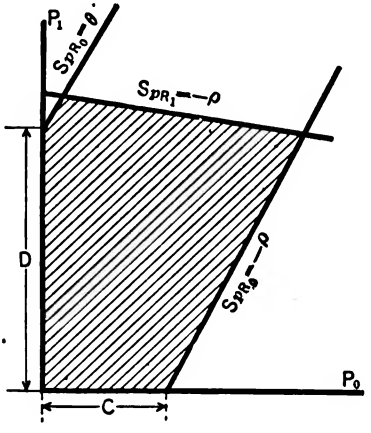

FIG. 73.

Reasoning in the same manner as in the preceding article, we see that any set of pressures which plot in the shaded area are safe as far as the four resultant radial stresses we have considered are concerned, and since, as we have previously shown, one of these four stresses is the highest resultant radial stress that will exist in the cylinder, the entire cylinder will be safe as far as resultant

Digitized by Google

radial stresses are concerned. Any set of pressures outside of the shaded area will stress some part of the cylinder beyond its elastic limit radially, and will therefore be unsafe.

The graph of Eq. (35), the third case, can form a bounding line of the shaded area only if it intersects the graph of Eq. (33) for positive values of both P and P_1. Trial shows this to be impossible. This case need not, therefore, be further considered.

When $P_1 = 0$ in Eq. (34), P_0 has the value indicated by "C." C is therefore the maximum interior pressure that the cylinder is capable of withstanding, as far as radial resultant compression at the interior of the bore is concerned, if no outside pressure is acting. Similarly, "D," obtained by making $P_0 = 0$ in Eq. (33), is the maximum outside pressure the cylinder is capable of withstanding as far as radial tension at the interior of the bore is concerned, if no inside pressure is acting.

148. Resultant Longitudinal Stress.—In deducing Eqs. (10), (11), and (12), we have assumed the applied longitudinal stress $q = 0$. Instead of doing this we might have used its actual value, which, if we assume it uniformly distributed over the cross-section of a cylinder closed at both ends with pressures P_0 and P_1 acting is,

$$q = \frac{P_0 R_0^2 - P_1 R_1^2}{R_1^2 - R_0^2}. \quad \ldots\ldots \quad (37)$$

If we had substituted this value of q together with the values of t and p from Eqs. (8) and (9) in Eqs. (2), we would have obtained a new set of equations corresponding to Eqs. (10), (11), and (12). The highest resultant stresses given by the new equations corresponding to (10), (11), and (12) would have been in all of the important cases numerically less than those given by (10), (11), and (12). Eqs. (10), (11), and (12) are therefore on the safe side.

Making the above substitution in the last of Eqs. (2), we obtain as the new equation corresponding to (12)

$$El_e = \frac{P_0 R_0^2 - P_1 R_1^2}{3(R_1^2 - R_0^2)}. \quad \ldots\ldots \quad (38)$$

Digitized by Google

This, the actual value of the longitudinal resultant stress under our new assumption, is seen to be numerically less than that given by Eq. (12) deduced under the assumption that the longitudinal applied stress was zero.

It is also in all cases numerically less than the resultant tangential stress given by Eq. (10), so it need not be further considered in figuring the strength of the cylinder, but its actual value, if desired, may be found by Eq. (38).

Our assumption of $q=0$ is further justified, in the case of a gun, by the fact that a gun is not strictly a cylinder closed at both ends. The motion of the projectile considerably relieves the longitudinal applied stress and makes it nearer 0 than the value given by Eq. (37) above.

149. Conditions for Safety both Tangentially and Radially.—The conditions for safety, both tangentially and radially, are obtained by superposing Figs. 72 and 73. Pressures which plot in the shaded area common to both these figures are safe under the most general conditions. This is shown in Fig. 74, for the special case in which $R_1=3R_0$ and $\theta=\rho=$ 50,000 lbs. per sq. in. The shape of the figure will differ for different values of R_1/R_0, and θ or ρ, but an examination of any such figure will show that a cylinder will always fail first at the inner surface where $r=R_0$ and it will fail either by tangential or radial compression or by tangential tension. It cannot fail by radial tension. If $P_1=0$, that is, if there is no exterior pressure, it will fail under tangential tension when P_0 becomes greater than A. If there be no interior pressure, $P_0=0$, it will fail by tangential compression when P_1 becomes greater than B.

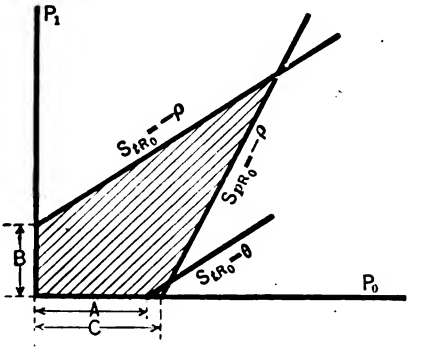

FIG. 74.

Digitized by Google

We thus see that of the eight equations we have deduced, showing the relations between interior and exterior pressures when some part of the cylinder is stressed to its elastic limit, only three need be considered in figuring the strength of the cylinder. They are Eqs. (29), (30), and (34), Eqs. (29) and (34) determining the strength of the cylinder as to tangential tension and radial pressure respectively at the inner surface. They become of importance as seen from the figure when a high interior pressure is acting alone or with a lower exterior pressure. Eq. (30) determines the strength of the cylinder as to tangential compression at the inner surface. It becomes of importance when an exterior pressure is acting alone or with a lower interior pressure.

150. Compound Cylinders. Built-up Guns.—The formulas thus far given have been deduced for single cylinders of metal from which all internal stresses and strains have been removed by the process of tempering. The formulas show the relations between the interior and exterior pressures and the resultant stresses and strains produced by them.

There is nothing in the deduction of these formulas, however, to prevent them from being applied to cylinders which have internal stresses and strains before the application of the given interior and exterior pressures, providing that these internal stresses plus those produced by the application of the interior and exterior pressures do not exceed at any point the elastic limit of the metal.

If, however, these formulas are used for a cylinder containing internal stresses and strains, the stresses and strains deduced from them corresponding to any given set of interior and exterior pressures are not the total stresses and strains in the part of the cylinder considered, but are only those produced by the applied internal and external pressures. To them must be added algebraically the stresses and strains already existing in the cylinder at the point considered in order to obtain the total resultant stresses and strains at that point.

Digitized by Google

Modern built-up guns are made by assembling one or more successive cylinders around a central tube. The successive cylinders, whose inside dimensions are slightly smaller than the outside dimensions of those on which they are to be assembled, are expanded by heat a sufficient amount to allow them to be assembled. The subsequent contraction on cooling causes each of them to exert a uniform exterior pressure on the cylinder immemediately underneath. This method of assemblage is called shrinkage.

Modern wire-wrapped guns are assembled by wrapping wire under tension on a central tube. The wire causes exterior pressure on the tube and each layer of wire causes pressure between the layers underneath. An outer cylinder is generally shrunk on over the wire.

Cylinders built up in either of the above ways are known as compound cylinders. They may be considered as simple cylinders containing internal stresses and strains caused by the shrinkage or winding of the wire. The formulas deduced for simple cylinders are, as stated, applicable to compound cylinders in so far as finding the resultant stresses and strains produced by interior and exterior pressures alone is concerned. We need only consider the compound cylinder as a simple cylinder and apply Eqs. (10), (11), and (12). Since the pressure on the outside of a compound cylinder used as a gun may always be considered as zero in comparison with the powder gas pressures acting inside, we may get the resultant stresses at any point, due to the powder gas pressure alone by substituting in the equation $r = R_r$ $P_1 = 0$, and $P_0 =$ the actual value of the interior pressure. R_r represents the exterior radius of the compound cylinder. To obtain the total resultant stresses, we must then add algebraically to the resultant stresses from the above formulas, those caused by the successive shrinkage of the cylinders or by the wrapping of the wire. We must determine, therefore, the resultant stresses caused by the shrinkage or wrapping before we are able to determine the total resultant stresses in compound cylinders.

Digitized by Google

A gun is said to be *in action* when it is subjected to powder gas pressure in firing; otherwise it is said to be at *rest.*

151. Gun Composed of Two Cylinders.

Let R_0, R_1, R_2, Fig. 75, be the radii of the successive surfaces from the interior outwards;

P_0, the unit pressure from the powder gases, system in action;

P_1, the unit pressure between the cylinders in action;

P_{1s}, the unit pressure between the cylinders at rest. This is the pressure due to the shrinkage;

θ_0 and θ_1, the tensile elastic limits of the inner and outer cylinders respectively;

ρ_0 and ρ_1, the corresponding compressive elastic limits.

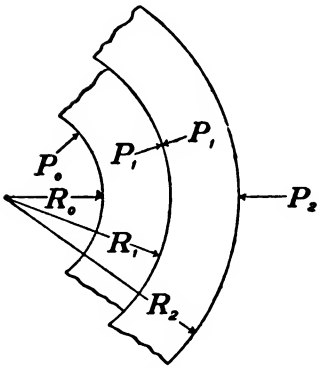

FIG. 75.

The caliber of the piece and the total thickness of its walls having been determined upon, there remain two independent variables to be adjusted in order to secure the maximum strength of the gun; namely, the intermediate radius, R_1, and the pressure P_{1s} at this radius at rest. The maximum strength of the gun varies slightly with R_1, and the value to be used is usually determined from practical consideration—conveninence in manufacture, etc. In the following discussion we shall assume R_1 fixed.

Relations between P_1, P_{1s}, *and* P_0.—Where the system is at rest the unit pressure between the two cylinders, which is the internal applied stress at that surface, is designated by P_{1s}. The value of this pressure may be regulated by the amount of shrinkage, as will be explained later.

When the system passes from rest to action or when a pressure P_0 is applied to the inside of the inner cylinder, the pressure between the cylinders will increase as outlined in the preceding

Digitized by Google

article. Representing the amount of this increase in P_1, when an interior pressure P_0 is applied by P_{1a}, we may, since these pressures are applied stresses at the points considered, obtain the value of P_{1a} from Eq. (8), considering the gun as a single simple cylinder, by placing $p = P_{1a}$, $P_1 = 0$, $R_1 = R_2$, $r = R_1$.

Making these substitutions, we obtain,

$$P_{1a} = \frac{R_0^2(R_2^2 - R_1^2)}{R_1^2(R_2^2 - R_0^2)} P_0. \quad . \quad . \quad . \quad . \quad . \quad (39)$$

We then have,

$$P_1 = P_{1s} + P_{1a} = P_{1s} + \frac{R_0^2(R_2^2 - R_1^2)}{R_1^2(R_2^2 - R_0^2)} P_0. \quad . \quad . \quad . \quad (40)$$

The graphs of Eqs. (39) and (40) are right lines parallel to each other, whose direction depends only upon the relative values of the radii. The pressure between the two surfaces in action increases as the interior pressure increases.

152. Practical Application of Formulas to Gun in Action.—In order to bring the several points out clearly, the section of the 4.7-in. field gun marked IV on Fig. 76 will be used to illustrate the subject. The dimensions at this section are:

$$R_0 = 2.35 \text{ inches};$$
$$R_1 = 3.86 \text{ inches};$$
$$R_2 = 6.00 \text{ inches}.$$

The prescribed elastic limits are $\theta_0 = \theta_1 = \rho_0 = \rho_1 = 50{,}000$ lbs. per sq. in.

The Outer Cylinder or Jacket.—It is evident that the outer cylinder or jacket will be subjected to interior pressure only, both at rest and in action, and that the stresses in this cylinder will have their maximum values in action since, as outlined in the preceding article, the interior pressures will increase in passing from rest into action. Therefore, if this cylinder is safe in action, it will be safe at all times. Further, as previously shown, it will

Digitized by Google

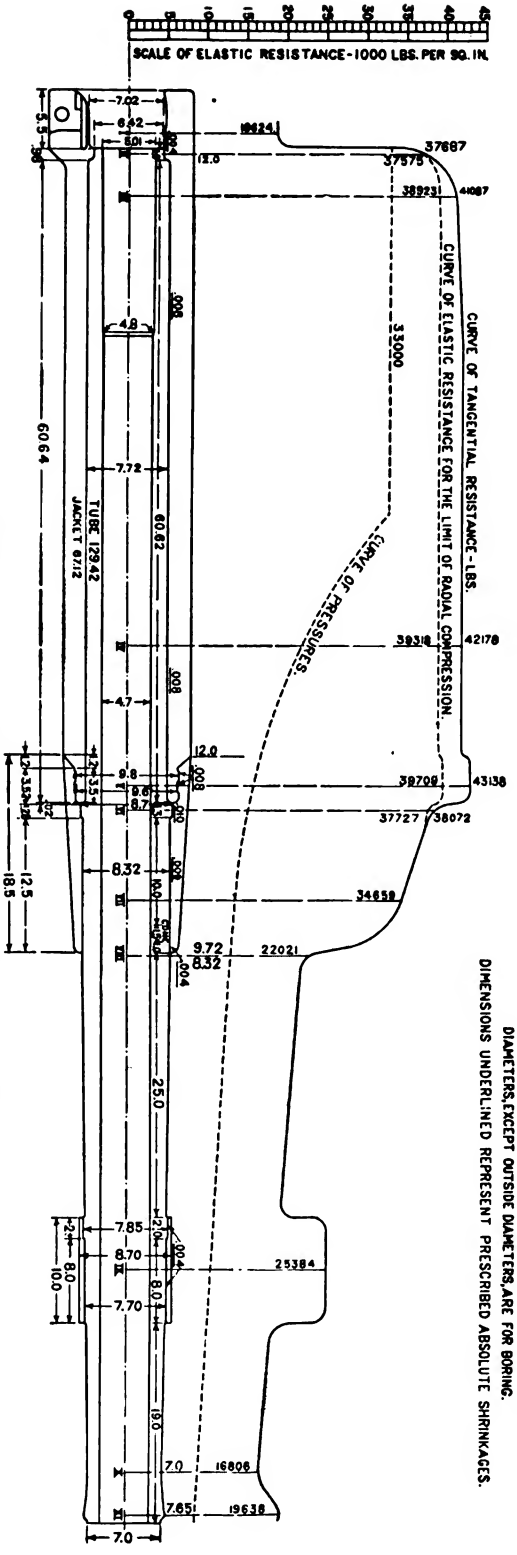

FIG. 76.—Shrinkages and Elastic Resistance of the 4.7-in. Heavy Field, Model 1904.

Digitized by Google

fail, if at all, by tangential tension at its inner surface (see *A*, Fig. 74). The maximum value that P_1 may have without overstraining the jacket may be obtained from Eq. (20) by considering the jacket as a simple tube with interior pressures only acting, and making $R_0=R_1$, $R_1=R_2$, $\theta=\theta_1$, $P_{0\theta}=P_{1\theta}$,

$$\text{Whence,} \qquad P_{1\theta}=\frac{3(R_2^2-R_1^2)\theta_1}{2R_1^2+4R_2^2}, \quad . \quad . \quad . \quad . \quad . \quad . \quad . \quad (41)$$

which for the above example reduces to

$$P_{1\theta}=18{,}211 \text{ lbs. per sq. in.}$$

The Inner Cylinder or Tube.—Here the first step is to plot a diagram similar to Fig. 74 for this cylinder. The equations pertaining are (29), (30), and (34). Substituting numerical values, we get as the equations of the bounding lines of the safe area for our example,

$$\text{From (29)}, \quad P_0=1.2655P_1+19{,}910, \quad . \quad . \quad . \quad (42)$$

$$\text{From (30)}, \quad P_0=1.2655P_1-19{,}910, \quad . \quad . \quad . \quad . \quad (43)$$

$$\text{From (34)}, \quad P_0=0.6137P_1+28{,}969. \quad . \quad . \quad . \quad . \quad (44)$$

The graphs of these are plotted in Fig. 77. Each line is numbered to correspond with its equation.

The maximum permissible interior pressure on the jacket is 18,211 lbs. per sq. in. as determined above. This is, therefore, the greatest exterior pressure that can be applied to the tube and is plotted at $P_{1\theta}$. The highest safe value of P_0 corresponding to the above value of $P_{1\theta}$ is found at P_{0_ρ}. Its actual numerical value for our example is obtained by substituting the value of $P_{1\theta}$ for P_1 in (44) and solving for P_0, whence we obtain,

$$P_{0_\rho}=40{,}146 \text{ lbs. per sq. in.}$$

Digitized by Google

Over-compression of Tube.—The above discussion has assumed that no part of the gun is to be strained beyond the elastic limit either in tension or compression.

In practice it is found permissible to allow the metal of the bore to be stressed radially somewhat beyond its elastic limit in compression in action. The metal at any point in the bore is supported by the surrounding metal, so that it is in better condition to resist a compressive force than is the metal of a test piece of the usual shape, and moreover, the extremely short time

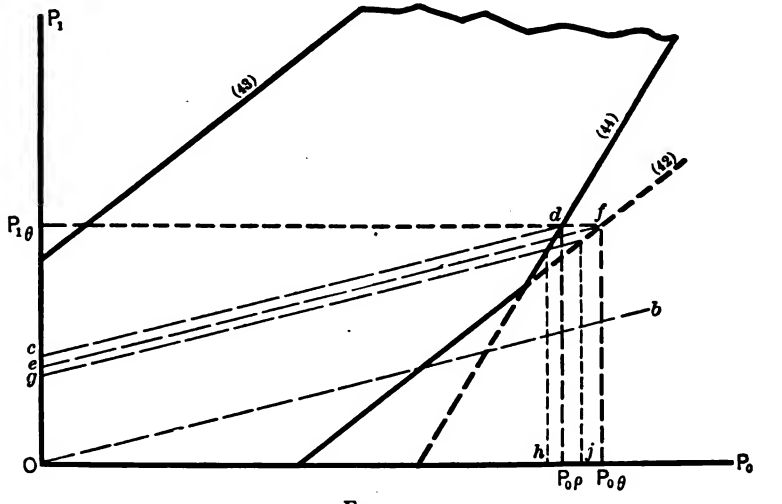

FIG. 77.

during which the metal is overstressed does not give it time to yield to the forces acting. Guns as constructed yield by tangential tension, and the radial overcompression in action, if it exists, does not determine rupture. It is the practice, therefore, to ignore radial overcompression and work the metal to its tangential elastic limit in tension. The value of P_0 corresponding to $P_{1\theta}$ under this condition is found at $P_{0\theta}$. Its numerical value is obtained from (42) by substituting the value of $P_{1\theta}$ for P_1 and solving for P_0, whence we obtain,

$$P_{0\theta} = 42{,}956 \text{ lbs. per sq. in.}$$

Digitized by Google

153. Gun at Rest.—It is assumed in the above discussion that in action the inside surface of the jacket is to be stressed tangentially to its elastic limit for tension and the inside surface of the tube is to be stressed radially to its elastic limit for compression, or in actual practice tangentially to its elastic limit for tension the resulting radial overcompression in action being disregarded. This evidently gives the strongest possible construction in action, as the metal of both the tube and jacket is stressed to the elastic limit.

It remains to determine whether or not any part of the gun if built under these conditions will be stressed beyond the elastic limit at rest. Under the condition of rest, the only pressure acting is P_{1s}, whose value, with $P_{1\theta}$ acting in action, obtained from Eq. (40), is

$$P_{1s}=P_{1\theta}-P_{1a}. \quad . \quad . \quad . \quad . \quad . \quad . \quad (45)$$

If this value is greater than P_{1p} given by Eq. (27) the pressure exerted by the jacket will compress the metal at the inner surface of the tube beyond its elastic limit for compression, and the above construction cannot be used.

We have thus as the condition for safety at rest for the above construction,

$$P_{1s}=P_{1\theta}-P_{1a} \lessgtr P_{1p}. \quad . \quad . \quad . \quad . \quad . \quad . \quad (46)$$

If this condition is not fulfilled, we cannot use $P_{1\theta}$ in action, as the pressure between the jacket and the tube, but must use a lower value P_1, such that

$$P_{1s}=P_{1p}=P_1-P_{1a}. \quad . \quad . \quad . \quad . \quad . \quad . \quad (47)$$

If the gun is built under this latter assumption, it is evident that the inside surface of the tube will be stressed to its elastic limit at rest and also in action, while no part of the jacket will be stressed to its elastic limit either at rest or in action.

With a two-cylinder gun of which the jacket and tube have the same elastic limits the first condition is always fulfilled. The

Digitized by Google

second condition cannot be fulfilled unless the elastic limit of the jacket is much greater than that of the tube.

Substituting numerical values in Eq. (39) we obtain for our example,

$$P_{1a}=0.2566P_0. \quad . \quad . \quad . \quad . \quad . \quad . \quad . \quad . \quad (48)$$

The graph of this is plotted in the figure as the line *Ob*. The slope of the line gives the rate of variation of P_1 as P_0 is varied. If the pressure is P_{0_ρ} in action, P_1 will fall off in passing from action to rest at this rate and the line *cd*, parallel to *Ob* will give the relation between P_0 and P_1 for any value of P_0. The value of P_1 at rest is given by the point *c*. If this point falls within the safe area, as in the figure, the gun will be safe at rest. If not, the value of P_1 at rest or P_{1_s} must be adjusted so as to bring the point *c* within the safe area, or make it equal to or less than P_{1_ρ}. If a line be drawn through this adjusted point parallel to *ob*, the maximum safe interior pressure will now be the value given by the point where the new line cuts out of the safe area on the right.

If we allow the gun to go to $P_{0\theta}$ in action, we get, in a similar manner, the point *e* as the proper value of P_1 at rest. The numerical values of P_1 corresponding to *c* and *e*, obtained from Eq. (40) and the previously determined value of P_{0_ρ}, $P_{0\theta}$, and $P_{1\theta}$, are,

$$P_{1_s} \text{ at } c = P_{1\theta_1} - 0.2566P_{0_\rho}$$
$$= 18{,}211 - 12{,}686 = 7910 \text{ lbs. per sq. in.} \quad . \quad . \quad . \quad . \quad . \quad (49)$$

$$P_{1_s} \text{ at } e = P_{1\theta_1} - 0.2566P_{0\theta}$$
$$= 18{,}211 - 11{,}023 = 7188 \text{ lbs. per sq. in.} \quad . \quad . \quad . \quad . \quad . \quad (50)$$

PROBLEMS

1. Assuming the section of the 4.7-in. field gun discussed in Art. 152 determine the resultant stresses on the inner and outer surfaces of the tube both in action and at rest, assuming the gun to be assembled so as to offer the maximum elastic resistance.

2. A section of a 2.38 field gun has the following dimensions: $R_0 = 1.19$ ins.,

Digitized by Google

$R_1 = 1.95$ ins., $R_2 = 3.00$ ins. El. Lim. 65,000. What is the elastic resistance of this section assembled to offer the maximum resistance? Ans. 55185.

3. What are the resultant stresses at the inner and outer surfaces of the tube and jacket of the section referred to in Problem 2 both in action and at rest?

154. Shrinkage.—Having determined the pressure P_1, which is to exist between the outer surface of the tube and the inner surface of the jacket, system at rest, this pressure is to be produced as previously described by making the inner radius of the jacket smaller than the outer radius of the tube and expanding the former by heating until it can be assembled over the latter. When the jacket cools after assemblage, the required pressure is set up between the contact surfaces.

The difference between the exterior diameter of the tube and the interior diameter of the jacket before heating is known as the *absolute shrinkage.*

The shrinkage per inch of diameter, that is, the absolute shrinkage divided by the diameter of the contact surface, is known as the *relative shrinkage.*

The shrinkages are so small that it is unnecessary to distinguish between the lengths of the radii as affected by them. In Fig. 78, the distance between the surfaces a and b is half the absolute shrinkage. The distance ab divided by R_1 is the relative shrinkage.

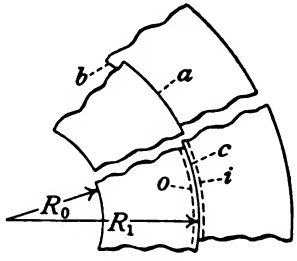

FIG. 78.

The shrinkage diminishes the exterior radius of the inner cylinder and increases the interior radius of the outer cylinder so that the radius R_1 of the contact surface is of a length intermediate between the lengths of the original radii.

The relative shrinkage is

$$\phi = \frac{ab}{R_1} = \frac{oc + ci}{R_1} \quad \ldots \ldots \ldots \quad (51)$$

Digitized by Google

The relative compression of the tube $\frac{ci}{R_1}$ is the total compression per unit of radius, produced by the pressure P_{1s} acting on its exterior. As the radius is proportional to the circumference, the total diminution of the radius per unit of length, or the relative compression, will be the same as the diminution of the circumference, or the tangential strain.

Its value may be determined from Eq. (10) by making $P_0=0$, $P_1=P_{1s}$, and $r=R_1$, whence,

$$\frac{ci}{R_1}=l_t=-\frac{2(R_1^2+2R_0^2)}{3E(R_1^2-R_0^2)}P_{1s}. \quad . \quad . \quad . \quad . \quad (52)$$

The negative sign indicates compression. The corresponding strain for the inner circumference of the jacket is obtained in a similar manner from the same equation by taking $P_0=P_{1s}$, $P_1=0$, $R_0=R_1$, $R_1=R_2$ and $r=R_1$ whence

$$\frac{oc}{R_1}=l_t=\frac{2(R_1^2+2R_2^2)}{3E(R_2^2-R_1^2)}P_{1s}. \quad . \quad . \quad . \quad . \quad . \quad (53)$$

The positive sign indicates expansion.

Substituting these values in Eq. (36), both being considered positive, since it is the *sum* of the compression of the tube and the expansion of the jacket that is desired, we obtain,

$$\phi=\frac{2R_1^2(R_2^2-R_0^2)}{E(R_1^2-R_0^2)(R_2^2-R_1^2)}P_{1s}. \quad . \quad . \quad . \quad . \quad (54)$$

The absolute shrinkage is

$$S_1=2R_1\phi=\frac{4R_1^3(R_2^2-R_0^2)}{E(R_1^2-R_0^2)(R_2^2-R_1^2)}P_{1s}. \quad . \quad . \quad . \quad (55)$$

This is the amount by which the exterior diameter of the tube should exceed the interior diameter of the jacket before the latter is heated for assemblage.

Digitized by Google

155. Compression of the Bore and Expansion of the Outer Surface of the Jacket Due to Shrinkage.—The relative tangential compression of the bore due to pressure P_{1s} is found from Eq. (10) by making $P_0=0$, $P_1=P_{1s}$, and $r=R_0$, whence

$$l_t=-\frac{2R_1^2P_{1s}}{E(R_1^2-R_0^2)}, \quad \ldots \quad (56)$$

and for the total decrease in diameter of the bore

$$d_0=2R_0l_t=-\frac{4R_0R_1^2P_{1s}}{E(R_1^2-R_0^2)}, \quad \ldots \quad (57)$$

or, eliminating P_{1s} by means of Eq. (55)

$$d_0=-\frac{R_0(R_2^2-R_0^2)S_1}{R_1(R_2^2-R_0^2)}. \quad \ldots \quad (58)$$

The relative expansion of the outer circumference of the jacket is obtained from Eq. (10) by making $P_0=P_{1s}$, $P_1=0$, $R_0=R_1$, $R_1=R_2$, and $r=R_2$, whence

$$l_t=\frac{2R_1^2P_{1s}}{E(R_2^2-R_1^2)}, \quad \ldots \quad (59)$$

and for the total increase in outside diameter,

$$d_2=2R_2l_t=\frac{4R_1^2R_2P_{1s}}{E(R_2^2-R_1^2)} \quad \ldots \quad (60)$$

or, eliminating P_{1s} as before,

$$d_2=\frac{R_2(R_1^2-R_0^2)}{R_1(R_2^2-R_0^2)}S_1. \quad \ldots \quad (61)$$

The quantities d_0 and d_2 are useful as indices of the proper assemblage of the gun. The various diameters are measured very carefully both before and after assemblage and the com-

Digitized by Google

parison of the values of d_0 and d_2 as measured with the corresponding computed values serves as an excellent check on the work.

In the section of the 4.7-in. gun considered above we get, by computing for $P_{1s}=7910$ lbs. per sq. in.,

$$S_1=0.009342 \text{ in.};$$
$$d_0=0.003938 \text{ in.};$$
$$d_2=0.004468 \text{ in.};$$

and for

$$P_{1s}=7188 \text{ lbs. per sq. in;}$$
$$S_1=0.008491 \text{ in.};$$
$$d_0=0.003579 \text{ in.};$$
$$d_2=0.004061 \text{ in.}$$

156. Prescribed Shrinkage.—Eq. (55) expresses the relation between the shrinkage and the pressure it produces. When for any reason the compound cylinder is not assembled in such a manner as to offer the maximum elastic resistance, as, for instance, when a certain shrinkage less than the maximum permissible shrinkage is prescribed, the pressure produced by the prescribed shrinkage may be found by solving Eq. (55) for P_{1s}.

Substituting this value in Eq. (40), we get an equation involving P_0 and P_1 which, if combined with Eq. (29) and P_1 eliminated will give $P_{0\theta}$, the maximum safe interior pressure for tangential tension. By combining it with Eq. (34) we get $P_{0\rho}$, the maximum safe interior pressure for radial compression.

The section of the 4.7-in. gun previously considered has a prescribed shrinkage of 0.008 in. Using the equations indicated we have,

From Eq. (55), $P_{1s}=$ 6,773 lbs. per sq. in.
From Eqs. (34) or (44) and (40), $P_{0\rho}=39{,}318$ lbs. per sq. in.
From Eqs. (29) or (42) and (40), $P_{0\theta}=42{,}178$ lbs. per sq. in.

Digitized by Google

A comparison of these values with those obtained in Art. 152 shows that the gun as built is 828 lbs. per sq. in. weaker radially and 778 lbs. per sq. in. weaker tangentially than it would have been if the shrinkage had been adjusted to give the maximum strength in these respective directions.

PROBLEMS

1. Assuming the section of the 2.38 field gun given in Problem 2, Art. 153, determine the absolute shrinkage.

2. Determine the compression of the bore and the expansion of the outer surface of the jacket caused by shrinkage, in the section referred to in Problem 1.

3. If the gun referred to in Problem 1 were assembled with a shrinkage of 0.005 in., what would be its elastic resistance?

4. Assembled as in Problem 3, what are the resultant stresses at the inner and outer surfaces of the tube and jacket in action and at rest?

5. Assembled as in Problem 3, what is the relative compression of the bore and what is the relative expansion of the outer surface of the jacket?

Curves of Elastic Resistance.—In the same way as above the elastic resistances are found at various sections of the gun, and curves of elastic resistance such as shown in Fig. 76, are constructed. By comparing the ordinates of these curves in the figure with the ordinates of the curve of powder pressures it will be seen that the gun has a factor of safety of about $1\frac{1}{4}$ over the part of its length that is subjected to the maximum pressure.

157. Curves of Tangential Resultant Stress in Section.—The curves of tangential resultant stress in the section of the 4.7-in. gun considered above, are shown in Fig. 79. The curves S_1 and S_2 show the stresses at rest produced in the tube and jacket, respectively, and are obtained from Eq. (10) by taking $P_0=0$, $P_1=P_{1'}=7188$ lbs. per sq. in. for S_1, and $P_0=P_{1'}$, $P_1=0$, $R_0=R_1$, and $R_1=R_2$ for S_2, whence,

$$S_1 = -7614-\frac{84{,}098}{r^2};$$

$$S_2 = 3384+\frac{243{,}635}{r^2}.$$

Digitized by Google

The curve P represents the resultant stress produced by the powder gas pressure in firing. It is obtained from Eq. (10) by taking $P_0 = 42{,}956$ lbs. per sq. in., $P_1 = 0$, $R_1 = R_2$, whence,

$$P = 5189 + \frac{373{,}612}{r^2}.$$

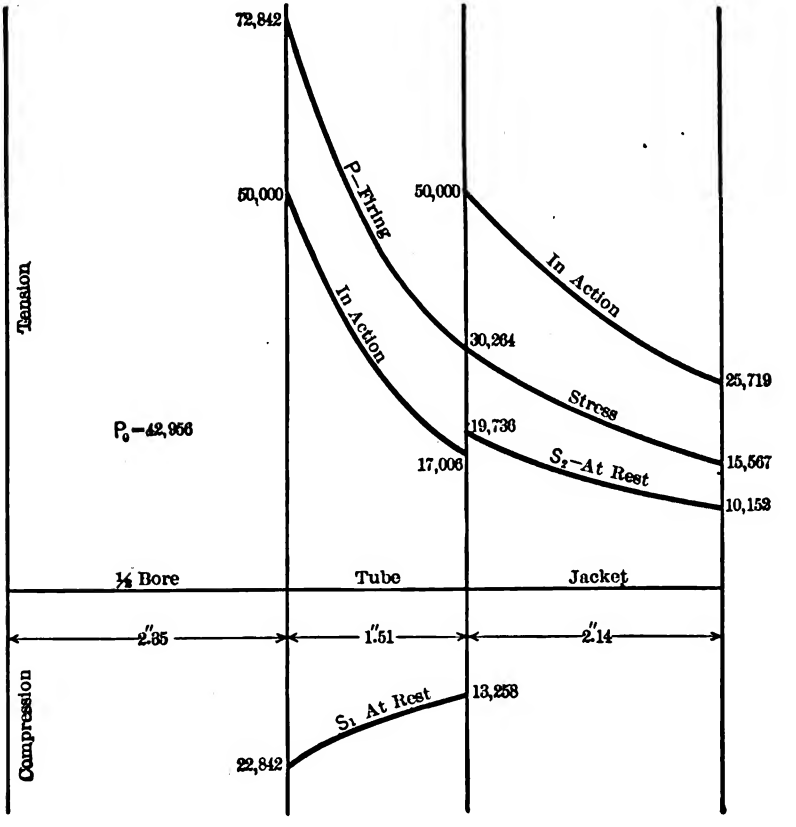

FIG. 79.

The resultants of the P curve and the S_1 and S_2 curves represent the actual resultant tangential stresses in the gun when fired. These curves are marked "In action" in the figure. It should be noted that the maximum resultant stress in the tube

Digitized by Google

and in the jacket is, as it should be, exactly the elastic limit of the metal.

158. Guns Composed of Three or More Cylinders.—By a simple extension of the above principles, we may compute a gun of any number of cylinders. In practice guns are never built of more than four cylinders. We will outline the method of procedure illustrated by means of the section through the powder chamber of the 12-in. gun, model of 1888. This consists of four cylinders whose respective inside and outside radii, etc., are as follows:

$R_0 = 7.1$ ins:

$\theta_0 = \rho_0 = 41{,}440$ lbs. per sq. in.;

$R_1 = 11.0$ ins.:

$\theta_1 = \rho_1 = 43{,}680$ lbs. per sq. in.;

$R_2 = 16.8$ ins.:

$\theta_2 = \rho_2 = 50{,}400$ lbs. per sq. in.;

$R_3 = 19.65$ ins.:

$\theta_3 = \rho_3 = 45{,}920$ lbs. per sq. in.;

$R_4 = 23.1$ ins.

Since the outside pressure on any cylinder is the same as the inside pressure on the next outer cylinder, and these pressures cannot be negative, it is convenient to assign the axis of coordinates as follows: Distances to the right of the origin on the horizontal axis represent values of the interior pressure on the tube, P_0; distances on the vertical axis above the origin represent pressures, P_1, between the tube and the jacket; distances to the left of the origin on the horizontal axis represent pressures, P_2, between the jacket and first layer of hoops; distances on the vertical axis below the origin represent pressures, P_3, between the first and second layers of hoops.

The first step is to plot diagrams similar to Fig. 74, for each cylinder, except the outside layer of hoops, considered without reference to the others. The equations pertaining to the tube are (29), (30), and (34). The same equations apply to the other

Digitized by Google

cylinders if proper changes be made in the subscripts. For instance, for the jacket we change the subscript 0 to 1 and 1 to 2 throughout. It is not necessary to compute the diagram for the outside layer of hoops, since we merely need to know the limiting value of the safe interior pressure, P_3, with reference to that cylinder.

We get the following numerical equations for the given gun:

Tube:

$$\text{From (29)},\ P_0 = 1.2414P_1 + 15{,}006, \quad . \ . \ . \quad (62)$$

$$\text{From (30)},\ P_0 = 1.2414P_1 - 15{,}006, \quad . \ . \ . \quad (63)$$

$$\text{From (34)},\ P_0 = 0.6316P_1 + 22{,}903, \quad . \ . \ . \quad (64)$$

Jacket:

$$\text{From (29)},\ P_1 = 1.2352P_2 + 15{,}412, \quad . \ . \ . \quad (65)$$

$$\text{From (30)},\ P_1 = 1.2352P_2 - 15{,}412, \quad . \ . \ . \quad (66)$$

$$\text{From (34)},\ P_1 = 0.6364P_2 + 23{,}822. \quad . \ . \ . \quad (67)$$

First Layer of Hoops:

$$\text{From (29)},\ P_2 = 1.0985P_3 + 7{,}448, \quad . \ . \ . \quad (68)$$

$$\text{From (30)},\ P_2 = 1.0985P_3 - 7{,}448, \quad . \ . \ . \quad (69)$$

$$\text{From (34)},\ P_2 = 0.7880P_3 + 16{,}027. \quad . \ . \ . \quad (70)$$

Outside Layer of Hoops.—From (10) or (27), substituting the subscript 3 for 0 and 4 for 1, taking $P_4 = 0$, $r = R_3$ and $S_t = \theta_3$, we get as the limiting value of the safe interior pressure on this cylinder

$$P_{3\theta} = 6990 \text{ lbs. per sq. in.}$$

The diagrams for the various cylinders are plotted in Fig. 80. Each line is numbered to correspond with its equation.

It will be noted that the diagram for the tube falls in the first quadrant and the successive cylinders fall in successive quadrants in a counter-clockwise direction.

Digitized by Google

159. The Gun in Action.—The maximum permissible interior pressure on the outer layer of hoops is 6990 lbs. per sq. in. as determined above. This is therefore the greatest exterior pressure that can be applied to the first layer of hoops and is plotted at $P_{3\theta}$. The corresponding value of the maximum interior pressure

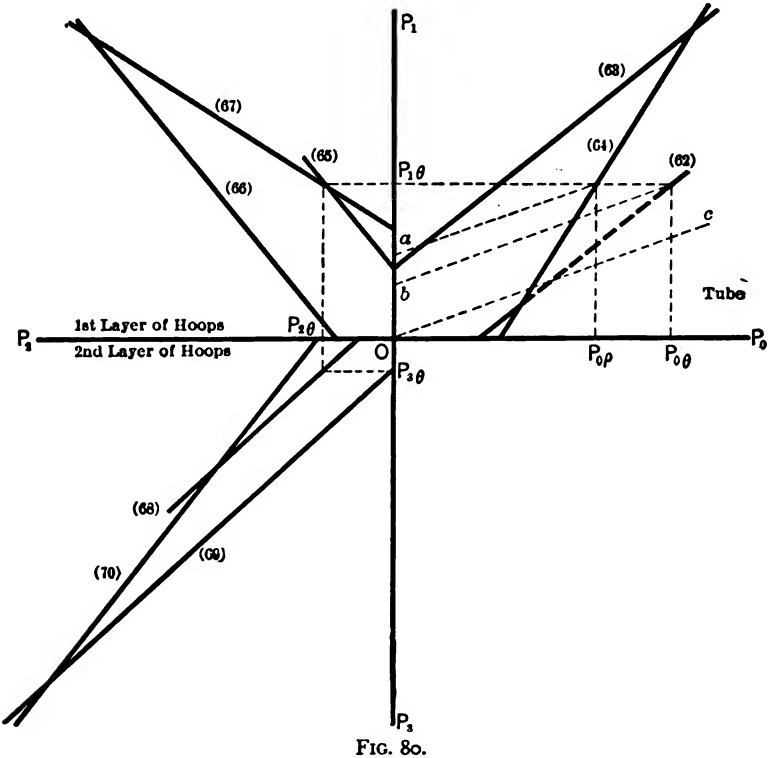

FIG. 80.

on this layer is $P_{2\theta}$ as shown. This is also the maximum exterior pressure on the jacket, the corresponding interior pressure being $P_{1\theta}$. This is likewise the maximum exterior pressure on the tube and we finally get $P_{0\rho}$, the maximum interior pressure on the tube in action. This pressure will result in every cylinder being stressed just to its elastic limit. If we permit the tube to go beyond its radial elastic limit in compression to its tangential

Digitized by Google

elastic limit in tension, we will get as the maximum interior pressure $P_{0\theta}$.

The Gun at Rest.—It is now necessary to determine whether or not any part of the system will be stressed beyond the elastic limit at rest. The most important part to be investigated is the tube.

The change in P_1 due to a given change in P_0 may be obtained from Eq. (39) by changing the subscript 2 to 4, since the whole gun is now acting as a single cylinder, whence,

$$P_{1a}=\frac{R_0^2(R_4^2-R_1^2)}{R_1^2(R_4^2-R_0^2)}P_0 \quad \ldots\ldots \quad (71)$$

$$=0.3557P_0.$$

The graph of this is plotted in the figure as the line Oc. The value of P_1 at rest may be obtained by drawing lines parallel to Oc, through the points $(P_{0\rho})$ and $(P_{0\theta})$. The former intersects the P_1 axis at a and the latter at b. Since a is outside the safe area for the tube, it is seen that this cylinder will be overcompressed at rest, if the gun is built under the limitations that all parts are to go to their respective elastic limits, but the tube is not to go beyond its radial elastic limit in compression *in action*.

The other cylinders will generally be safe at rest if they are safe in action. Their investigation, however, offers no difficulty and is conducted exactly as in the case of the tube, except that their interior pressures do not entirely vanish at rest.

Having decided on the pressures at the various surfaces in action, the corresponding pressures at rest are determined. The necessary shrinkages to produce these pressures are then determined as in the case of the two-cylinder gun.

It is important to note that we are not dependent on the values scaled from the drawing for determining the various pressures. For instance, $P_{3\theta}$ has been determined by computation, $P_{2\theta}$ is obtained by substituting this value of P_3 in (68) and solving for P_2. This value of P_2 substituted in (65) gives $P_{1\theta}$, which

Digitized by Google

in Eqs. (62) and (64) respectively, gives $P_{0\theta}$ and $P_{0\rho}$. Similarly, all other numerical data may be computed from the equations. The graphical construction simply serves as a very valuable aid in preventing error by giving the computor a concrete idea of the problem.

160. Gun of Maximum Tangential Strength.—We see from the preceding that a built-up gun may be so constructed that at rest the metal at the interior of the bore is compressed tangentially to its elastic limit ρ_0.

If an interior pressure P_0 is applied to a gun so constructed, the resultant tangential stress at the interior of the bore caused by it is obtained from Eq. (10) by placing $P_1=0$, $r=R_0$, and $R_1=R_n$, since we assume that the gun may be composed of any number of cylinders.

We then have

$$S_{tP_0R_0}=\frac{2}{3}\frac{2R_n^2+R_0^2}{R_n^2-R_0^2}P_0. \quad . \quad . \quad . \quad . \quad . \quad (72)$$

If we now add this tangential stress to the tangential stress existing at rest or $-\rho_0$, the sum may reach but not exceed θ_0. That is, we have for the gun of maximum tangential strength,

$$\frac{2}{3}\frac{2R_n^2+R_0^2}{R_n^2-R_0^2}P_0-\rho_0=\theta_0, \quad . \quad . \quad . \quad . \quad . \quad (73)$$

or, solving for P_0,

$$P_0=\frac{3}{2}\frac{R_n^2-R_0^2}{2R_n^2+R_0^2}(\theta_0+\rho_0). \quad . \quad . \quad . \quad . \quad . \quad (74)$$

This equation shows the tangential strength of a gun built up so as to make that strength a maximum is dependent only upon the relative values of the interior and exterior radii and upon the sums of the elastic limits in extension and compression of the metal of the tube. It is assumed, of course, that the gun is so constructed that none of the outer layers exceeds the elastic limit, whether in action or at rest.

It may be shown that when the elastic limits of the tube and outer hoops are nearly equal a built-up gun of maximum strength

Digitized by Google

cannot be constructed with less than four layers including the tube, for while, for instance, two layers could be assembled so as to compress the metal of the bore to its elastic limit tangentially at rest, a powder pressure sufficient to extend the metal of the bore to its elastic limit in action would then extend the interior of the jacket tangentially beyond its elastic limit. A careful examination of the curves of stress for a two-cylinder gun shown in Fig. 79 will show this to be the case.

PROBLEMS

1. A section of the 16-in. gun has the following dimensions: $R_0 = 11$ ins. $R_n = 31$ ins. What is the maximum elastic strength the gun can be made to have if the elastic limit of the metal of the tube is 50,000 lbs. per sq. in. both in compression and in extension?

2. What would be the elastic strength of the gun in Problem 1 if it were made of a single forging?

3. The gun referred to in Problem 1 is actually built of wire. It could be given the same elastic strength if built up of four cylinders. What would be its elastic strength if built up of two cylinders, the intermediate radius being 18.5 ins.?

161. Elastic Strength of Wire-wrapped Guns. General Construction.—Wire-wrapped guns consist of (*a*) an inner steel tube which forms the support on which the wire is wrapped and in which the rifling grooves are cut; (*b*) the layers of wire wrapped upon the tube to increase its resistance by the application of an exterior pressure as well as to add to the strength of the structure by their own resistance to extension under fire; and (*c*) one or more layers consisting of a steel jacket and hoops placed over the wire with or without shrinkage. The jacket is generally relied upon to furnish the longitudinal strength of the gun, since this feature is lacking in the wire envelope. The breech block is therefore ordinarily screwed into the jacket, or into a breech bushing screwed into the jacket, in order that the latter may resist the longitudinal stress due to the pressure at the bottom of the bore, the consequent rearward acceleration of the gun in recoil, and the resistance to recoil of the recoil brake applied

Digitized by Google

to the gun through the trunnions or through a lug forming part of the jacket.

The maximum strength of a wire-wrapped gun, like that of a built-up gun, is given by Eq. (74). It is therefore evident that the wire-wrapped gun cannot be made stronger than the built-up gun of four cylinders of the same dimensions, providing the tubes of both have the same elastic limits. Neither can the wire-wrapped gun be made lighter for the same strength.

The principal advantage of wire-wound guns over guns of the built-up type is economy of manufacture and greater facilities for the inspection of the material in the layers over the tube, it being evident that a very large proportion of the material in the wire is exposed to view as compared with a very small proportion of the material in a large forging. The wire-wrapping itself has a large reserve of strength due to the high elastic limit that may be given to it.

There are two principal methods of wrapping wire on a gun tube; one is to wrap the wire at constant tension and the other is to wrap it at such varying tension that, when the gun is fired with the prescribed pressure, all the layers of wire shall be subjected to the same tangential stress. The latter method is theoretically the better, but owing to the greater convenience of wrapping the wire at constant tension and to its greater elastic strength, which permits the tube to be compressed to its elastic limit by wrapping wire thereon at constant tension without causing the stress in the wire to approach too close to its elastic limit when the gun is fired, the former method is generally used.

All seacoast guns 6 ins. and above in caliber now being constructed for the Army are wire-wrapped guns. This construction has also been tried in smaller guns ordinarily constructed of two cylinders. In the latter case an actual increase in elastic strength can be obtained for the same weight.

The details of wire guns, and the theory of wire gun construction, are discussed in Ruggles' "Stresses in Wire-wrapped Guns and in Gun Carriages."

Digitized by Google

Construction of Guns

162. General Features.—All army guns except small howitzers or mortars are of the built-up or wire-wrapped type. Built-up guns of less than 5 ins. caliber, or howitzers up to 8 ins. caliber, consist of a tube and a jacket, the latter surrounding the breech end of the gun and extending forward of the center of gravity. Built-up guns of larger caliber have one or two layers of hoops at the breech end in addition to the jacket, one layer of hoops extending to the muzzle.

The bore of the tube forms the powder chamber, the seat of the projectile, and the rifled bore. The jacket extends to the rear of the tube a sufficient distance to allow the seat of the breech block to be formed in the bore of the jacket. Through the bearing of the breech block in the jacket the longitudinal stress due to the pressure of the powder gases is transmitted to the jacket and the metal of the tube is thus relieved from this stress.

Fig. 81 shows the construction of a small single-piece mortar and of some of the latest built-up guns in our service.

The forward end of the jacket of the field guns is threaded with a broad screw thread. The rear end of locking hoop is provided with a similar female thread, and the locking hoop is both screwed and shrunk on the jacket. The hoop is also shrunk to the tube, and by means of a bearing against a shoulder on the tube just forward of the jacket it holds the tube and jacket firmly together.

The number of hoops in the 12-in. gun of newer model is very much less that in that of older model. This reduction has been made possible by progress in the manufacture of large pieces of forged steel, and increases the longitudinal strength and stiffness of the gun.

In all built-up guns there is some method of locking the tube to the jacket so as to prevent relative movement of these parts under the powder pressure. The hoops are also locked together. The figure shows the various ways in which this is done.

Digitized by Google

Single-piece Mortar.

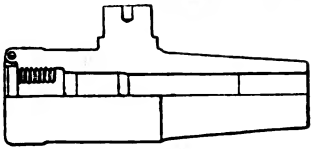

3-inch Field Gun.

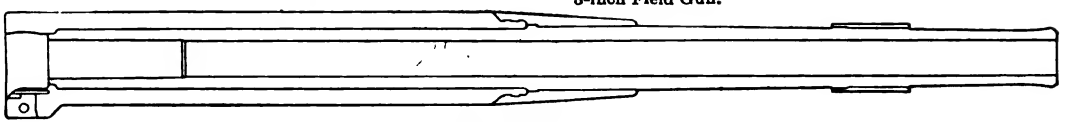

12-inch Mortar.

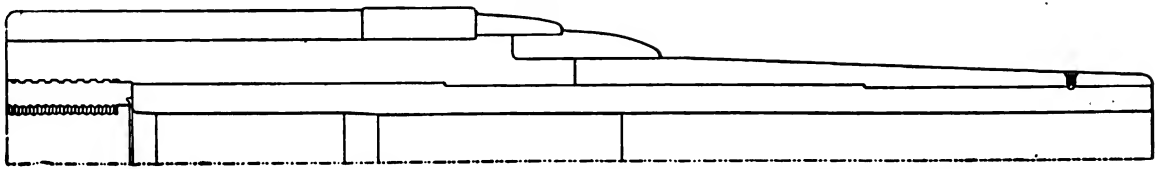

12-inch Gun, Model of 1888, 34 Cals., 52 Tons.

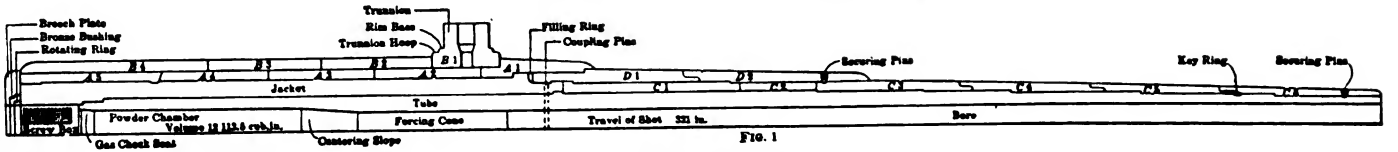

FIG. 1

12-inch Gun, Model of 1900, 40 Cals., 59.10 Tons.

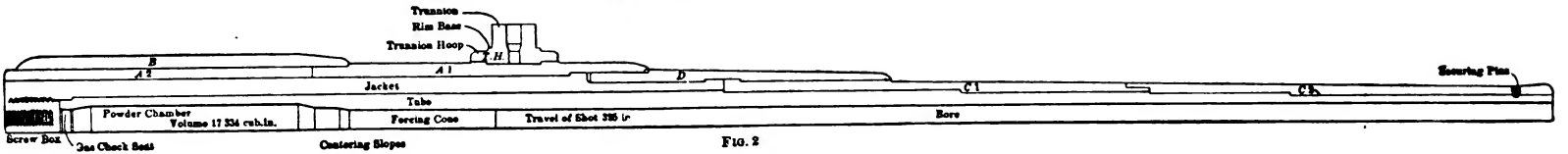

FIG. 2

FIG. 81.

Digitized by Google

The *D* hoop shown in Fig. 81 locks together the jacket and the C_1 hoop; and these, bearing against shoulders on the tube, in rear and in front, hold the tube firmly in place. The space behind the *D* hoop, left to accommodate the increase of length of the hoop when heated for shrinking, is filled with a steel filling ring as noted in the 1888 model. The joint between the C_1 and C_2 hoops is coned, as shown exaggerated in Fig. 82. Four securing pins passing through the C_2 hoop near the muzzle assist in preventing forward movement of the hoops under the vibration set up in the gun by the shock of discharge.

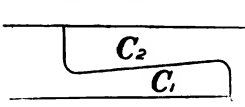

FIG. 82.

As the metal at the muzzle receives support from one side only, the gun is thickened there to make the section of equal strength with those near it.

Wire Guns—Fig. 83 shows three of the wire guns used in our service. The jacket is placed on the outside of the wire. It carries the trunnions or recoil band and is furnished with a bushing at the rear in which the breech recess is formed. The longitudinal stress on firing is thus mostly taken by the jacket. To give longitudinal stiffness and to protect the wire, the part of the gun in front of the jacket is covered with a layer of thin hoops.

The 6-in. gun shown is wire-wound over only about two-thirds of its length. The jacket is locked by a shoulder to the hoop in front, which in turn is similarly locked to the tube. The rear end of the jacket is locked to the tube by the breech bushing.

The 12-in. mortar and 14-in. gun shown are wire-wound throughout their lengths. Forward motion of the tube is prevented in these by a series of stepped steel rings embedded in the wire and abutting against a shoulder on the tube in rear and one on the jacket or hoop in front. Rearward movement of the tube is prevented by the breech bushing.

The first wire gun of this type was designed by General William Crozier, Chief of Ordnance, U. S. A.

Digitized by Google

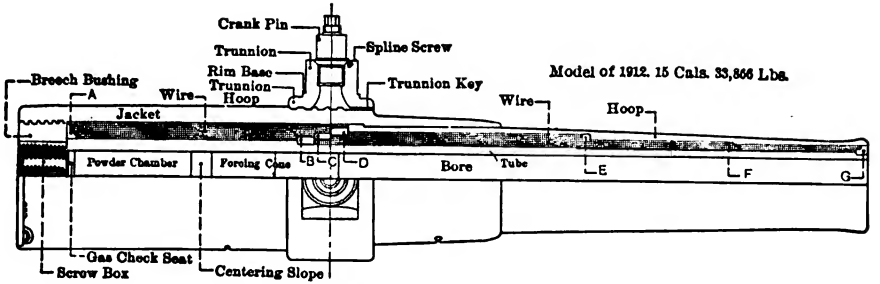

12″ MORTAR MODEL 1912.

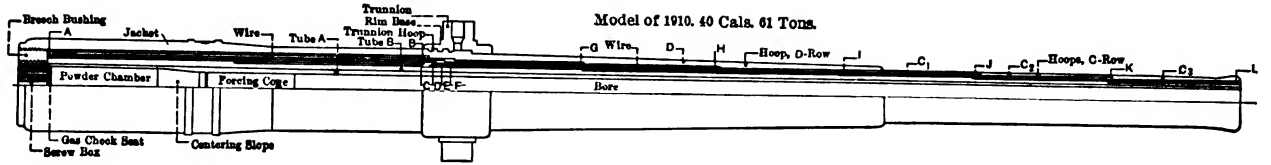

14″ GUN MODEL 1910.

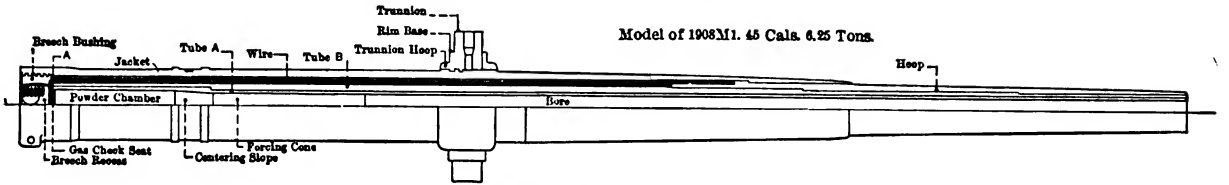

6″ GUN MODEL 1908.

FIG. 83.

Digitized by Google

163. Operations in Manufacture.—*Machines.*—The following operations pertain to built-up guns and also to wire guns in so far as the finishing of the tube, jacket, and hoops, and their assembling is concerned.

The steel forgings from which the parts of the guns are made are manufactured by private concerns and are delivered rough bored and turned to within about 3/10 of an inch of finished dimensions.

As the parts of the gun are of a general cylindrical form the principal operations in preparing them for assembling are the operations of boring and turning.

For this purpose the gun lathe and the boring and turning mill are used.

Gun Lathe.—The general features of the lathe, by means of

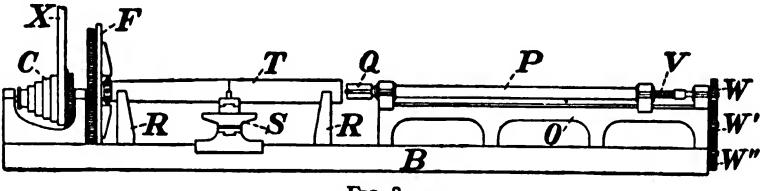

FIG. 84.

which the larger forgings are bored and turned, are shown in Fig. 84. The principal parts are: the bed, *B*, made very strong and much larger than for the ordinary lathe; the head stock and cone pulley *C*; the face plate *F*, to which the work *T* is clamped; the slide rest *S*, carrying a cutting tool; the back rests *R*, forming intermediate supports for the tube *T*; the boring bed *O*, supported on the bed proper, *B*, and carrying the boring bar *P* with its tool *Q*; the feed screw *V*, which lies inside the boring bar *P*; and the gears *W*, by which the feed screw is driven.

Motion is communicated to all the parts by the belt *X*, acting on the cone pulley. This causes the face plate and tube to rotate and also communicates motion to the long shaft, not shown in the figure, upon the end of which is the lower gear wheel *W''*.

Digitized by Google

The motion is transmitted through W' to W, and thence to the feed screw V. By changing the gears any ratio between the velocity of rotation of the tube and that of translation of the tool Q can be obtained. It is necessary that there be only one source of motion, since if the feed screw or slide rest were driven independently of the cone pulley which drives the work, a change in the speed of one would not cause a corresponding change in the speed of the others, and damage to the tools, the work, or the machine might result.

The slide rest S is driven by a second feed screw not shown.

The back rests R can be adjusted to any diameter of forging.

The lathe is supplied with an oil pump, by means of which a stream of oil is forced into the bore while the work is in progress. The chips or cuttings come out at the opposite ends of the tube from that at which the tool enters.

Boring and Turning Mill.—The smaller hoops are usually machined on a vertical boring and turning mill, shown in Fig. 85. The work is bolted to the slotted table t. The cutting tools are carried in the tool holders o at the lower ends of the boring bars a. In the illustration one of the boring bars is shown in a vertical position and the other inclined. The table rotates, carrying the work with it. By means of the feed mechanism the cutting tools are fed either vertically or horizontally or at an angle as desired.

On account of the greater difficulty of boring than of turning to prescribed dimensions, the bored shrinkage surface is always finished first. Allowance may then be made in turning the male surface for any slight error in the diameter of the bored surface. The desired shrinkage is thus obtained.

164. Boring Tools.—In making long bores of comparatively small diameter, as in the tubes of guns, special tools are necessary in order to insure straightness of the bore.

The tube is carefully mounted in the lathe and so centered that any bending or warping that may exist in the long forging will be wholly removed in the operations of boring and turning. The bore is started true with a small lathe tool and continued for a

Digitized by Google

length of about three calibers. The tool shown in Fig. 86 is then used to continue the bore. This tool, called a reamer, has a semi-

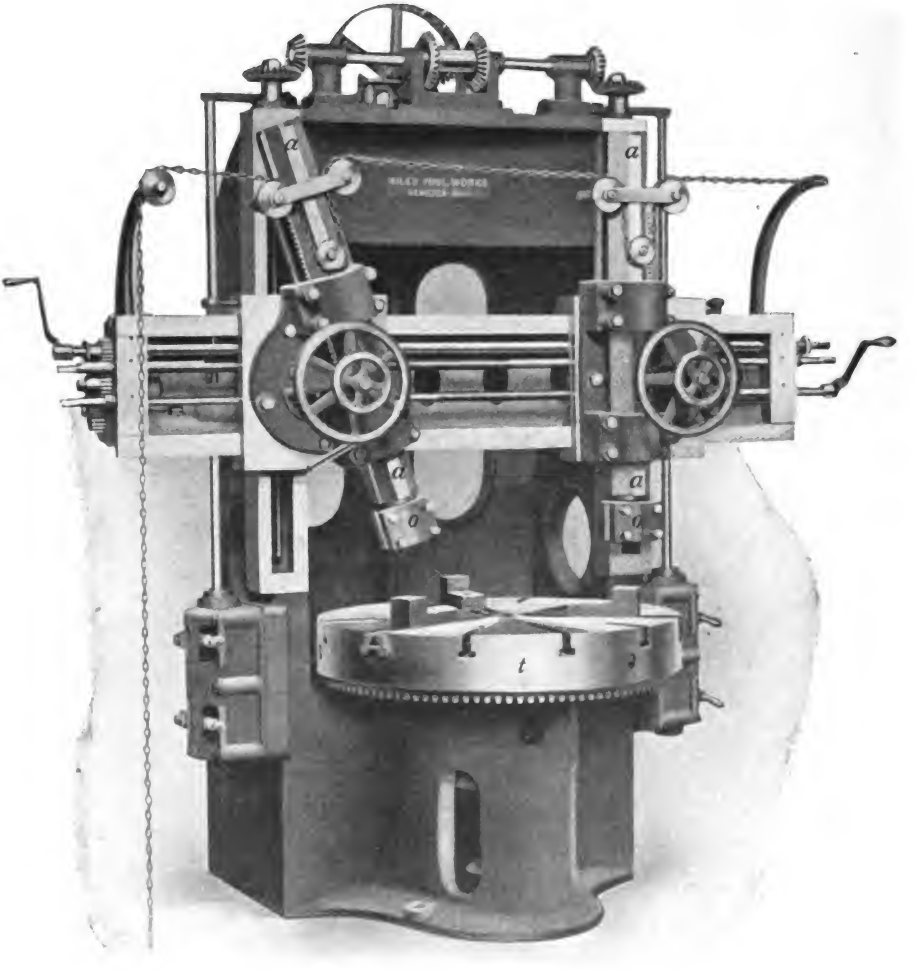

FIG. 85.—Vertical Boring and Turning Mill, 37-inch.

cylindrical cast-iron body, or bit, *A*, carrying the steel cutting tool *B*. It is supported in the boring bar *C*, which is pushed

Digitized by Google

forward by the feed screw of the lathe. The semi-cylindrical bit exactly fits in the bore already started. As the tube rotates, the pressure against the cutting edge *B* forces the bit against the bottom of the bore. This together with the length of the bit prevents deviation of the cutting edge as the tool advances down the bore, and makes the bore a true cylinder.

In order to make the surface of the bore smooth and uniform

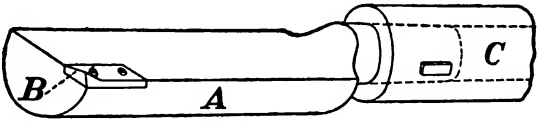

FIG. 86.

the light finishing cuts are made with a packed bit or wood reamer, shown in Fig. 87.

The cast-iron bit *A* carries two cutters, *b*, at opposite extremities of a diameter. Two pieces *D* of hard-wood packing are bolted to the bit and serve to guide the cutters accurately. The tool fits tightly in the bore. The light cut taken and the pressure of the oiled wood packing leaves the surfaces of the bore very smooth and uniform and highly polished.

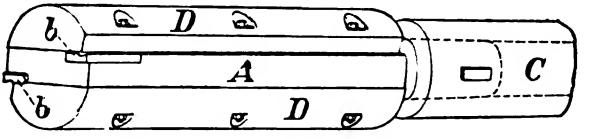

FIG. 87.

165. Assembling.—The interior diameter of the jacket, when bored to finished dimensions, is less than the exterior diameter of the tube by the amount of the shrinkage prescribed. In order to assemble the jacket on the tube it is therefore necessary to expand the jacket sufficiently to permit its being slipped over the tube into its place. The expansion is accomplished by heat. The jacket is placed in a vertical furnace heated by oil or other fuel to a temperature varying from 600° to 750° Fahrenheit,

Digitized by Google

depending upon the thickness of the forging and the amount of expansion required. Great care is exercised that the heating shall be uniform throughout the length of the forging. The requisite expansion, which in general is about 0.004 of an inch per inch of diameter, is determined by a gauge set to the exact diameter to which the bore should expand. The gauge, held at the end of a long rod, is tried in the bore of the forging in the furnace. When it enters the bore properly the requisite expansion has been attained. Care is taken to avoid overheating, which might injuriously affect the qualities of the metal.

When the desired expansion has been attained the jacket is hoisted vertically from the furnace. It will be seen by reference to the figures that the shoulders on the tubes of the 12-in. guns are so arranged that the jacket must be slipped over the breech end of the tube, while the arrangement of the shoulders on the wire-wrapped tubes of the 6-in. guns require that the tube be inserted into the breech end of the jacket.

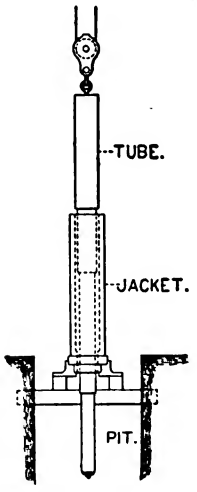

FIG. 88.

The method of assembling is called *breech insertion* or *muzzle insertion* according as the breech or muzzle end of the jacket first encircles the tube. For breech insertion, as in wire-wrapped guns, the jacket after being lifted from the furnace is placed upright on a strong iron shelf supported at the mouth of a deep pit, Fig. 88. The tube is then carefully lowered into its seat in the jacket. For muzzle insertion, as in the 12-in. guns, the tube is supported upright in the pit, the breech end up, and the jacket is lowered over the tube.

Cooling of the heated jacket is accomplished by means of sprays of water directed against the forging from an encircling pipe as shown at *D* in Fig. 89. The cooling is begun at the section of the jacket which it is desired should take hold of the tube first, as at the shoulder *C*, Fig. 89. As the cooling of

Digitized by Google

the remainder of the jacket progresses the metal is drawn toward the section first cooled, and thus a tight joint at the shoulder is insured. After the jacket has gripped at the shoulder the cooling pipe is moved very gradually upward toward the breech, care being exercised that the jacket shall grip at successive sections in order that longitudinal stresses may not be developed in the metal.

If two sections some distance apart grip the tube before the intermediate sections are cooled, the metal between the two sections that first gripped the tube will be prevented from contracting during cooling and the result will be excessive longitudinal tensile stresses in the metal between the sections when cool.

The shrinking on of hoops is conducted in practically the same manner as the shrinking of the jacket. When the hoops are small and can be handled quickly they are often assembled to the gun in a horizontal position. Cooling of the hoop is begun at the end toward the jacket, or toward the hoop already in place, in order that contraction shall take place in that direction and make a tight joint between the parts.

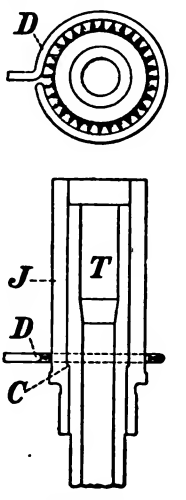

FIG. 89.

When the assembling of all the parts is completed the tube is finish smooth-bored and the exterior of the gun is turned to prescribed dimensions.

166. Rifling the Bore.—The rifling of the bore is effected in the rifling machine, which is essentially similar to the boring and turning lathe previously described. The gun does not rotate in the rifling machine, but the cutting tool is given the combined movement of translation and rotation necessary to cut the spiral grooves in the bore. The rifling bar takes the place of the boring bar, *P*, Fig. 84. The rifling bar, *m*, Fig. 90, carrying at its forward end the rifling tool *g* provided with cutters for the grooves, is moved forward and backward by means of the feed screw *b*. The desired

Digitized by Google

motion of rotation is given to the rifling bar by means of the pinion *c* and the rack *d*, which engages on a guide bar *e* bolted to a table made fast to the side of the rifling bar bed. The bar *e* is flexible and is given the shape of the developed curve of the rifling. As the rack travels forward with the rifling bar it is forced to the left by the guide bar, imparting the proper amount of rotation to the rifling bar and cutting tools.

Cutting tools are carried at both ends of a diameter of the rifling tool. At the end of a cut the cutting tools are automatically withdrawn toward the center of the bar and the bar is retracted for a new cut.

When a number of guns of the same design are to be manufactured, a spiral groove is cut in the rifling bar itself. A stud fixed

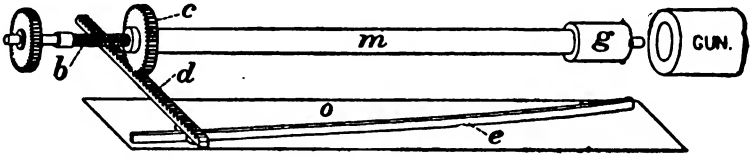

FIG. 90.

in the forward support of the rifling bar works in the groove and gives to the bar the proper movement of rotation. The guide bar with rack and pinion is not then used.

MEASUREMENTS

167. Necessity of Accurate Measurements.—In order that the gun may be assembled with the required shrinkages the surfaces of the various cylinders composing the gun must be accurately turned and bored to the prescribed dimensions. The dimensions of all parts of the gun must be in accord with the design. The tolerances, or allowed variations from prescribed dimensions, are in general two thousandths of an inch for the diameters of shrinkage surfaces, and one-hundredth of an inch in lengths.

Accurate measurements of the various dimensions of every part of a gun are therefore essential.

Digitized by Google

The exact length of any dimension of a forging is usually obtained by means of one of two instruments, called measuring points and calipers. The points of the instruments used are adjusted until the distance between them is the exact length of the dimension to be determined. The length between the points of the instruments is then measured in a vernier caliper.

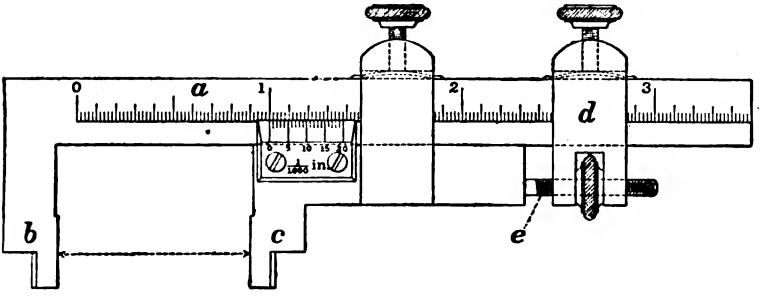

FIG. 91.

Vernier Caliper.—The vernier caliper is shown in Fig. 91. The steel blade *a* graduated in inches and decimal divisions is provided with a fixed jaw *b* and movable jaw *c*. By means of the clamp *d* and small motion screw *e* the movable jaw may be brought accurately to any distance from the fixed jaw. The distance

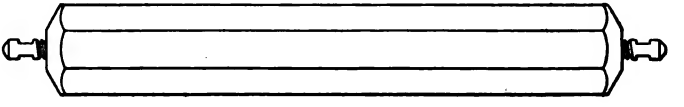

FIG. 92.

between the jaws is read from the scale and vernier. The least reading of the vernier is one-thousandth of an inch. The ends of the jaws *b* and *c* are usually one-eighth of an inch wide, so that the measurement between their outer edges is a quarter of an inch greater than the reading of the scale.

Measuring Points.—The measuring point consists ordinarily of a rod of wood into the ends of which are set metal points, Fig. 92.

Digitized by Google

One of these points at least is capable of a small movement out and in. The rod is of wood in order that the heat of the hand may not affect its length. One of the metal points may be provided with a micrometer head from which the movement of the point out and in from a fixed length may be read at once.

Measuring points are used in determining interior diameters and the distance between surfaces that face each other. In measuring an interior diameter at any point in a bore, as at *a*, Fig. 93, one end of the measuring point is placed at *a*. As the diameter is the longest line in the cross-section, the end *b* must be moved out until the rod cannot be revolved about the end *a* in the plane of the cross-section.

To determine, when touch is made at *b*, that the rod is truly in

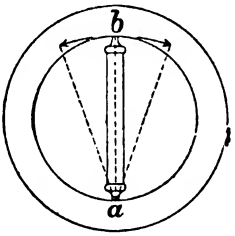

FIG. 93.

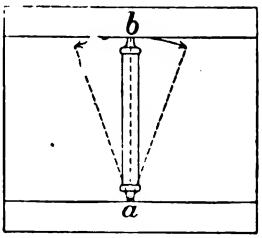

FIG. 94.

the cross-sectional plane, the rod must be revolved in a direction at right angles to this plane, for as seen in Fig. 94 the diameter is the shortest line in the longitudinal plane, and the rod when set to the proper length must be capable of revolution in that plane, touching only at the point *b*. In other words the measuring point has the length of the diameter when the measuring point is incapable of revolution in the cross-sectional plane and at the same time capable of revolution in the longitudinal plane.

Similarly when applying the rod to the vernier caliper to read the length of the rod, the movable jaw of the caliper must be brought to such a distance from the fixed jaw that the rod when revolved about one end in two planes at right angles to each other will touch at one point only in each plane of movement. The

Digitized by Google

length of the interior diameter may then be correctly read from the scale of the caliper.

In making measurements the sense of touch is depended upon to determine when contact exists. When the distance that separates a measuring point from a surface is so minute that light cannot be seen between the point and the surface, the lack of contact can be unerringly detected by the touch.

168. The Star Gauge.—In the case of long tubes all parts of which are not readily accessible some means must be adopted of making the measurements at a distance from the operator. The instrument used for this purpose is called a star guage.

Its general features are shown in Fig. 95. The long hollow rod or staff *a* carries at its forward end the head *b*. Embracing

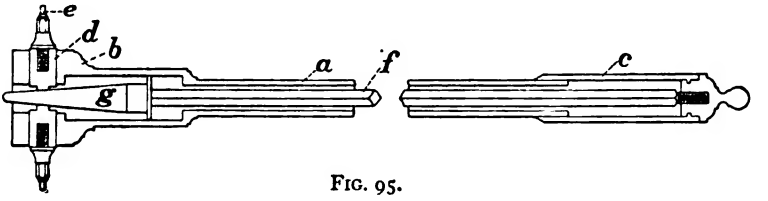

FIG. 95.

the rear end of the staff is the handle *c* to which is attached the square steel rod *f*. The handle has a sliding motion or screw motion on the end of the staff, and any movement of the handle is communicated through the rod *f* to the cone *g* in which the square rod terminates at its forward end.

The head *b* has three or more sockets, *d*, which are pressed inward upon the cone *g* by spiral springs not shown in the figure. Into these sockets are screwed the star gauge points *e*. Three points are generally used, 120° apart. The points are of different lengths for the different calibers to be measured.

Any movement of the cone forward or backward causes a corresponding movement of the measuring points out or in. The cone has a known taper, and the change in its diameter under the measuring points due to any movement of the handle is marked on a scale at the handle end of the staff. The handle carries a

Digitized by Google

vernier by means of which the scale may be read to a thousandth of an inch. The reading of the scale is the change in length of the diameter that is measured by the points when the handle is at the zero mark.

The staff *a* and rod *f* are made in sections, usually 50 ins. long, so that the gauge may be given a length convenient for the measurement of any length of bore.

The star guage is set for any measurement by means of a standard ring of the proper diameter. The standard rings are of steel, hardened and very carefully ground to the given diameter. If it is desired to measure a 10-in. bore, for instance, measuring points of the proper length are inserted in the sockets *d* of the star gauge. The 10-in. ring is held surrounding the points, and the handle *c* of the star guage is pushed in until the points touch the inner surface of the ring. The handle is then adjusted until the reading of the scale is zero. The instrument is now ready for use.

The gun or forging whose bore is to be measured is supported so that its axis is horizontal. The star gauge is also carefully supported in the axis of the bore prolonged, and in the bore when necessary. The distance of the measuring points from the face of the bore is read from a scale of inches marked on the staff. At each selected position of the gauge the handle is pushed forward until the measuring points touch the surface of the bore. The difference between the diameter of the bore at this point and the standard diameter for which the gauge is set is then read from the scale at the handle in thousandths of an inch.

169. Calipers.—For the measurement of outside diameters calipers are used. The ordinary calipers for measurement of short exterior lengths are shown in Fig. 96. For the measurement of the larger exterior diameters of gun forgings, calipers as shown in Fig. 97 are employed. One of the points *a* or *b* is movable and may be provided with a micrometer head. As in the case of interior measurements the caliper must be revolved in two planes about the end that is held at the point from which the diameter is to be measured, and the distance between the points of the caliper

Digitized by Google

must be adjusted until touch is made at one point only in each plane.

The distance between the points of the caliper, as determined

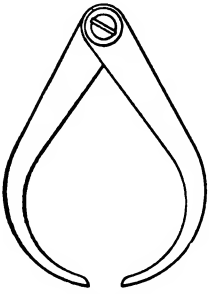

FIG. 96.

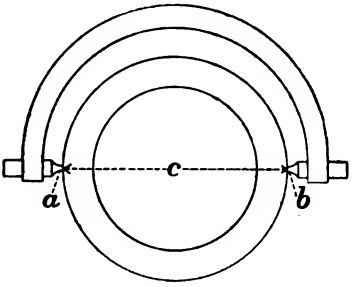

FIG. 97.

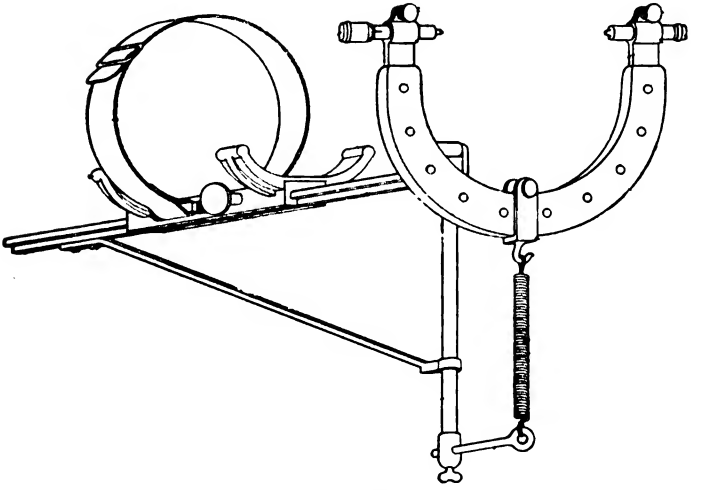

FIG. 98.

by the length between the outer edges of the jaws of the vernier caliper, is then the true length of the exterior diameter.

The frames of the large exterior calipers required for gun measurements must be made heavy in order that the calipers shall have sufficient stiffness and not be subject to change of form. In

Digitized by Google

use these calipers are therefore supported from above by a spring connection with a frame that is secured to the piece being measured, Fig. 98.

Standard Comparator.—In order to insure accuracy in all measurements, all measuring scales are compared with a common standard. For this purpose the standard comparator is provided.

Rifling

170. Purpose. Twist.—Rifling consists of a number of helical grooves cut in the surface of the bore. The soft metal of the rotating band of the projectile is forced into these grooves and

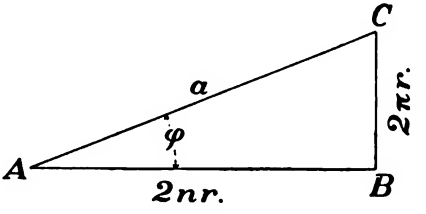

Fig. 99.

causes the projectile to take up a motion of rotation as it passes through the bore.

Rotation of the projectile around its longer axis is necessary for stability in flight.

By the twist of rifling is meant the inclination of one of the grooves to the element of the bore at any point.

Rifling is of two kinds:

(*a*) Uniform twist or that in which the twist is constant throughout the bore.

(*b*) Increasing twist or that in which the twist increases from the breech toward the muzzle end of the bore.

Rifling is specified by the developed curve of the groove. In rifling of uniform twist the developed curve is a straight line as shown at *a* in Fig. 99. In rifling of increasing twist the developed curve takes another form.

Digitized by Google

The twist of rifling is usually expressed in number of calibers length of bore in which it makes one complete turn. This is called the twist in calibers.

Let ϕ be the angle of twist;
n the twist in calibers;
r the radius of the bore.

We then have from Fig. 99 for uniform twist rifling,

$$\tan \phi = \frac{2\pi r}{2nr} = \frac{\pi}{n} \quad . \quad . \quad . \quad . \quad . \quad . \quad . \quad (75)$$

for the value of the tangent of the angle of twist. For rifling with increasing twist ϕ is variable, but its value at any point is $\frac{\pi}{n}$.

Relation between the Velocity of Translation and the Velocity of Rotation of the Projectile—

Let v be the velocity of translation of the projectile at any point of the bore in ft. per sec.;
ϕ the angle of twist of the rifling at the same point;
ω the angular velocity of the projectile at the same point;
d the diameter of the bore in feet.

The linear velocity of rotation of a point on the outside surface of the projectile is evidently $v \tan \phi$.

The angular velocity is therefore

$$\omega = \frac{2v \tan \phi}{d} \quad . \quad . \quad . \quad . \quad . \quad . \quad . \quad (76)$$

Knowing the muzzle velocity and the twist at the muzzle, the velocity of rotation of the projectile as it leaves the gun may be determined.

171. Pressure on the Lands.—Differentiating Eq. (76), we have,

$$\frac{d\omega}{dt} = \frac{2 \tan \phi}{d} \frac{dv}{dt} + \frac{2v}{d} \frac{d(\tan \phi)}{dt};$$

Digitized by Google

representing by u the travel of the projectile, we have, since

$$\frac{d(\tan\phi)}{dt}=\frac{d(\tan\phi)}{du}\frac{du}{dt}=\frac{v}{\cos^2\phi}\frac{d\phi}{du},$$

$$\frac{d\omega}{dt}=\frac{2\tan\phi}{d}\frac{dv}{dt}+\frac{2v^2}{d\cos^2\phi}\frac{d\phi}{du} \quad . \quad . \quad . \quad . \quad (77)$$

The left-hand member of this equation is proportional to the tangential pressure exerted by the lands of the rifling against corresponding lands formed on the rotating band. It is the sum of the two terms of the second member, the first of which is proportional to the product of the $\tan\phi$ and $\frac{dv}{dt}$, the latter being practically proportional to the pressure per sq. in. of the powder gas. The second term is the product of $\frac{2v^2}{\cos^2\phi}$ and $\frac{d\phi}{du}$, the latter being the rate of increase in the twist as a function of distance along the bore.

Consideration as to Best Form of Twist.—The twist actually required at the muzzle to maintain the stability of the projectile in flight varies with the kind of projectile and with the muzzle velocity. In our service the twist adopted is one turn in 25 calibers for guns and one turn in 20 calibers for howitzers and mortars.

If a uniform twist is used we have in Eq. (77), $\frac{d\phi}{du}=0$, and

$$\frac{d\omega}{dt}=\frac{2\tan\phi}{d}\frac{dv}{dt}. \quad . \quad . \quad . \quad . \quad . \quad . \quad . \quad . \quad (78)$$

Since ϕ is constant the driving force on the rotating band will be a maximum when the pressure in the gun is a maximum, or near the origin of rifling. If an increasing twist is used ϕ will be smaller near the origin than at the muzzle, making the first term of the second member of Eq. (77) smaller near the origin than with a uniform twist. The second term of that equation varying with

Digitized by Google

$\frac{v^2}{\cos^2 \phi}$ will be small near the origin, increasing as the velocity increases and as ϕ increases.

The sum of these terms or the driving force on the lands will be smaller near the point of maximum pressure in the gun than if a uniform twist is used. Near the muzzle, however, the increase in the second term of the second member of Eq. (77) will be so great as to make the driving force on the lands greater with the increasing twist than with the uniform twist, but if the rate of increase of twist is properly selected, it will be lower than its value near the origin with a uniform twist.

The increasing twist thus serves to reduce the maximum tangential driving force on the band, thus lessening the danger of stripping it, with resultant loss of rotation of the projectile. This is its principal advantage over the uniform twist, though it also reduces slightly the maximum pressure in the gun.

The principal disadvantage of increasing twist is the continued change of form necessary in the grooves pressed in the rotating band as the projectile passes through the bore. This results in increased friction and a higher value for the passive resistance than with a uniform twist.

172. Equation of the Developed Curve of the Rifling.—If the twist increases from zero at the breech uniformly to the muzzle, the equation of the developed curve of the rifling will be of the form

$$y = ax + bx^2$$

which being differentiated twice gives

$$\frac{d^2y}{dx^2} = 2b.$$

That is, the rate of change in the tangent to the groove is constant.

A twist in this form would offer less resistance than the uniform twist to the initial rotation of the projectile. But to still further diminish this resistance, a twist that is at first less rapid

Digitized by Google

than the uniformly increasing twist and later more rapid has been generally adopted for rifled guns. The equation of the semi-cubic parabola

$$x^{3/2}=2py \quad . \quad . \quad . \quad . \quad . \quad . \quad . \quad . \quad (79)$$

is generally adopted for the developed curve of the rifling. The twist is assumed at breech and muzzle and the curve between these points is obtained from the above equation.

The tangent to the curve at any point makes with the axis of x an angle whose tangent is dy/dx. The value of the tangent of the angle at any point is π/n, see Eq. (75), n representing the twist in calibers, the number of calibers in which the groove makes a complete turn.

Therefore, differentiating Eq. (79),

$$\frac{dy}{dx}=\tan\phi=\frac{3x^{1/2}}{4p}=\frac{\pi}{n}. \quad . \quad . \quad . \quad . \quad . \quad . \quad . \quad (80)$$

Example 1.—Determine the equation of the developed rifling curve, and the part of the curve to be used, for the 3-in. field gun, model 1905. The twist is 0 at the breech end, 1 turn in 25 calibers at a point 12.52 ins. from the muzzle, and from this point uniform to the muzzle. The length of the rifled bore is 72.72 ins.

The twist at the breech is 0, or one turn in an infinite number of calibers. Therefore n in Eq. (80) is infinite, $\tan\phi$ is 0 and $x=0$; and from Eq. (79) y is also 0. The origin of the curve is therefore at the breech.

At 12.52 ins. from the muzzle, $x=72.72-12.52=60.2$, and the twist $n=25$.

Substituting these values in Eq. (80) and solving for p,

$$p=\frac{3(60.2)^{1/2}25}{4\pi}=46.31.$$

Substituting in (79) we have for the equation of the developed groove of the rifling from the breech to a point 12.52 ins. from the muzzle

$$x^{3/2}=92.62y$$

Digitized by Google

and the part of the curve to be used lies between the origin and the ordinate for which the abscissa is $x=60.2$. From this point to the muzzle the curve is a straight line making with the axis of x an angle whose tangent is $\pi/25$.

The curve is shown numbered 1 in Fig. 100.

Example 2.—Determine the equation of the developed rifling curve, and the part of the curve to be used, for the 4.7-in. Armstrong gun, 50 calibers long. The twist is 1 turn in 600 calibers at the

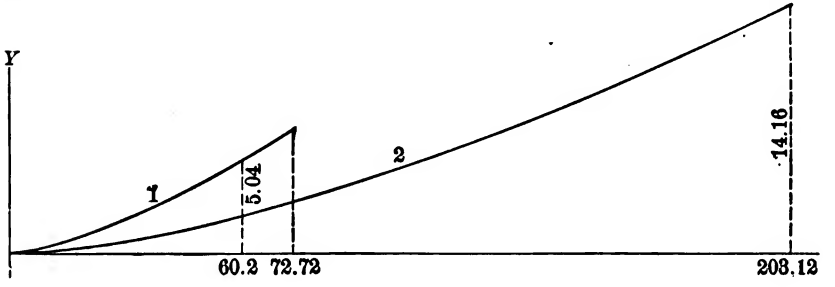

FIG. 100.

breech, and 1 turn in 30 calibers at the muzzle. The length of the rifle bore is 203.12 ins.

At the breech $n=600$ and $\tan\phi=\pi/600$.
At the muzzle $\tan\phi=\pi/30$.

The curve represented by Eq. (80) passes through the origin of coordinates.

Let x_1 be the abscissa of the point of the curve at which the tangent is $\pi/600$. Then $x_2=x_1+203.12$ will be the abscissa of the point at which the tangent is $\pi/30$.

From Eq. (80)

$$\frac{\pi}{600}=\frac{3x_1^{1/3}}{4p} \qquad \frac{\pi}{30}=\frac{3(x_1+203.12)^{1/3}}{4p}.$$

We have two equations involving x_1 and p. Solving we find

$$p=102.2 \qquad x_1=0.51 \qquad x_2=203.63$$

Digitized by Google

The equation of the developed curve of the rifling is, Eq. (79),

$$x^{3/2} = 204.4y,$$

and the abscissas of the extremities of the part of the curve to be used are the values determined for x_1 and x_2.

The curve is shown numbered 2 in Fig. 100.

PROBLEMS

1. The twist of the rifling in the 6-in. gun model of 1908 is one turn in 50 calibers at the breech and one turn in 25 calibers at the muzzle. The muzzle velocity is 2600 ft. per second. What is the velocity of rotation of the projectile?

2. The increasing twist begins at the origin of rifling and extends for a length of 208 ins. and the developed curve of rifling is a sem-cubic parabola. Determine its equation.

173. Form of Rifling Used in Army Guns.—All the latest model Army guns use increasing twist rifling of one turn in 50

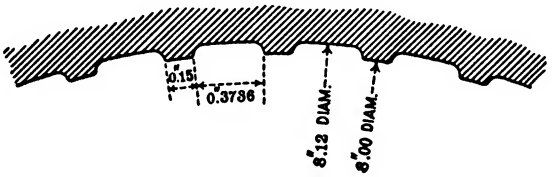

FIG. 101.

calibers at the breech to one turn in 25 calibers at point from 2 to 4 calibers from the muzzle.

In mortars the rifling is generally one turn in 40 calibers at the breech to one turn in 20 calibers at a point several calibers from the muzzle. Some mortars are rifled with a uniform twist. We also have some guns in which the rifling begins with a zero twist.

Many of the guns in our service have six rifling grooves per inch of caliber. The forms of the grooves in guns rifled in this way is shown in Fig. 101. The depth increases with the caliber, being about .06 in. for 12-in. guns and .07 for 14-in. guns.

Digitized by Google

The 3-in. field gun has 24 grooves or 8 per inch of caliber.

In our latest model guns the number of grooves has been increased to 9 per inch of caliber.

The first evidence of the wearing out of a gun is failure of the projectile to receive the proper rotation due to wear of the rifling. The larger number of lands increases the useful life of the gun.

In the service 30-caliber rifle the depth of the grooves is 0.004 of an inch. It is desirable in small arms to limit the depth of the grooves to the minimum, in order to lessen the thickness of barrel and to permit ready cleaning of the bore. There are four grooves each 0.1767 in. wide. The lands are one-third as wide. The twist is uniform, one turn in 10 ins.

Breech Mechanism

174. General Characteristics.—The breech mechanism comprises the breech block, the obturating device, the firing mechanism, and the mechanism for the insertion and withdrawal of the block.

There are two general methods of closing the breech. In the first method the block is inserted from the rear. The block is provided with screw threads on its outer surface which engage in corresponding threads in the breech of the gun. In order to facilitate insertion and withdrawal of the block the threads on block and breech are interrupted.

The surface of the block is divided into an even number of sectors and the threads of the alternate sectors are cut away. Similarly the threads in the breech are cut away from those sectors opposite the threaded sectors on the block. The block may then be rapidly inserted nearly to its seat in the gun, and when turned through a comparatively small arc, say $\frac{1}{8}$ or $\frac{1}{12}$ of a circle, depending upon the number of sectors into which the block is divided, the threads on the block and in breech are fully engaged and the block locked.

In the second method a wedge-shaped block is seated in a

Digitized by Google

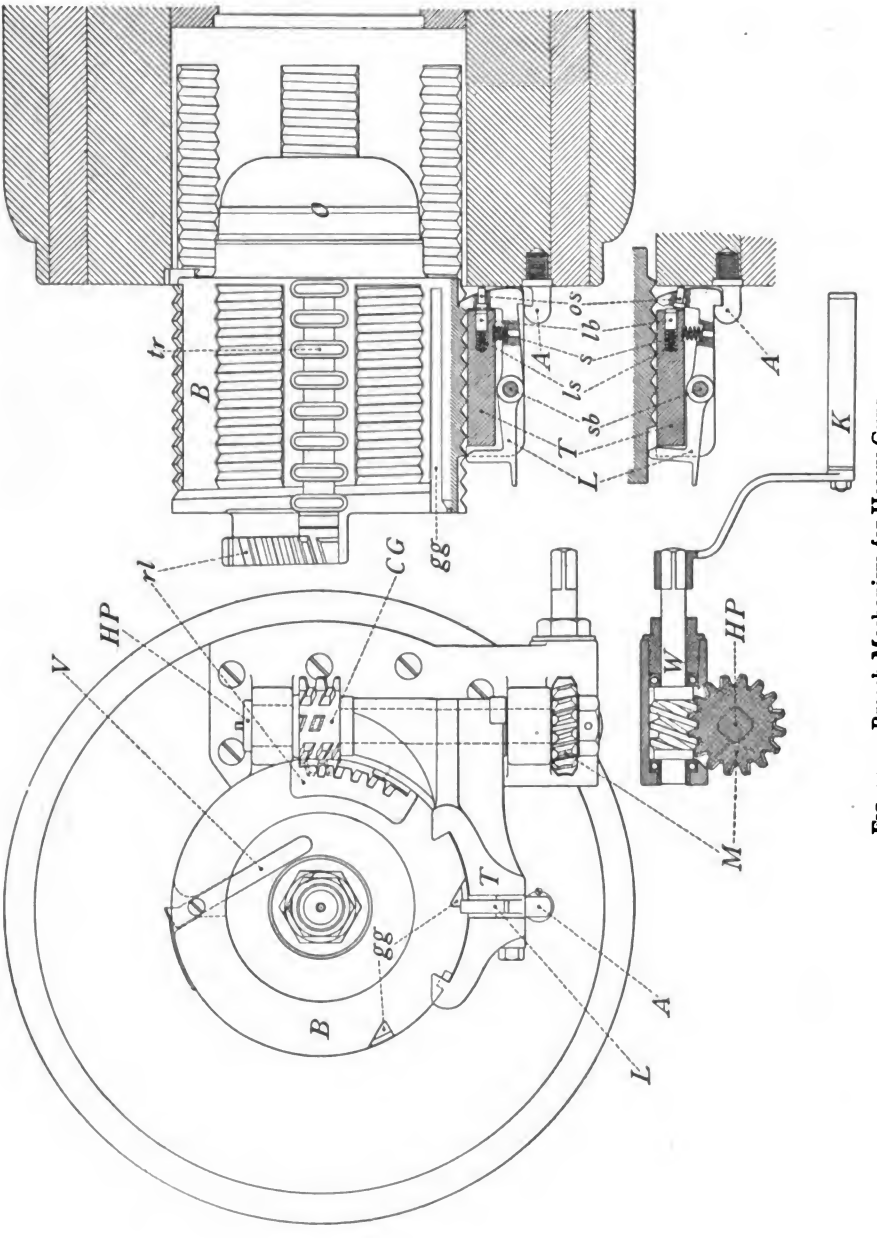

FIG. 102.—Breech Mechanism for Heavy Guns.

Digitized by Google

slot cut in the breech of the gun at right angles to the bore, and slides in the slot to close or open the breech.

Variations of these two methods will be noted in the descriptions of the breech mechanism of some of the guns in service.

The breech block is usually supported in the jacket of the gun or in a base ring screwed into the jacket. The seat in the jacket being of greater diameter than could be provided in the tube, the bearing surface of the screw threads on the block is increased and the length of the block may be diminished.

The slotted screw breech block is used almost exclusively in our service. Its advantages are uniform distribution in the gun of the longitudinal stress produced by the powder pressure and lightness permitted in the construction of the breech end of the gun. In the latest model 3-in. field gun, however, the sliding block operating vertically has been adopted for the reason that it permits of simpler mechanism for semi-automatic operations.

175. The Slotted Screw Breech Mechanism for Heavy Guns.—An example of the slotted screw breech mechanism as used in the heavier guns is shown in Figs. 102 to 104, which represent the breech mechanism of the 12-in. rifle. The breech block *B* has six threaded and six slotted sectors. When the breech is closed the threads on block engage with the threads in the breech. The breech is opened by turning the crank *K* mounted on the shaft *W*. The movement of the crank is transmitted through the worm gear to the hinge pin *HP*, and through the compound gear *CG* to the rotating lug *rl* formed on the rear of the block. The block is thus rotated one-twelfth of a turn, and its threaded sectors then lie in the slotted sectors of the breech. Further movement of the crank causes the teeth of the compound gear *CG* to engage in the teeth of the translating rack *tr* cut in a slotted sector of the block. The block is thereby caused to slide to the rear on to the tray *T*, the guide rails of the tray engaging in the grooves *gg* in the block. When the block is sufficiently withdrawn the bottom of the block depresses the rear end of the tray latch *L* and lifts the forward end of the latch out of the catch *A*, where it has been

Digitized by Google

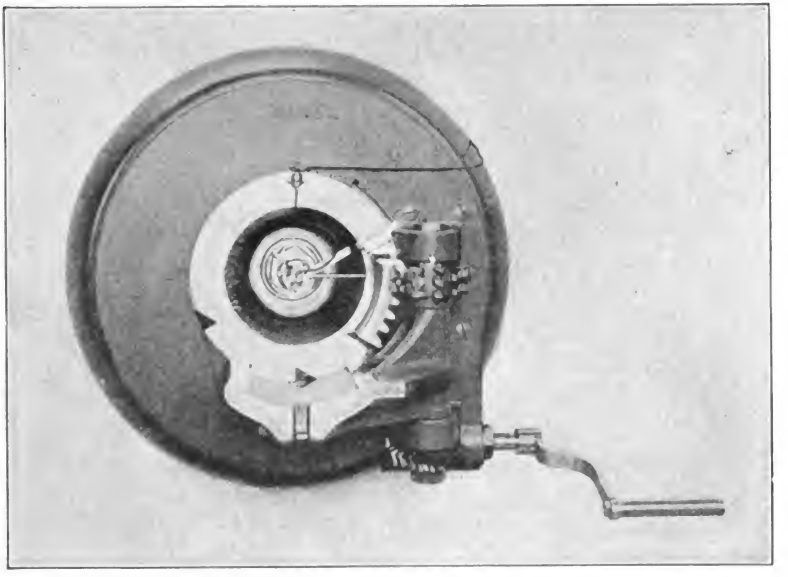

FIG. 103.—Closed.

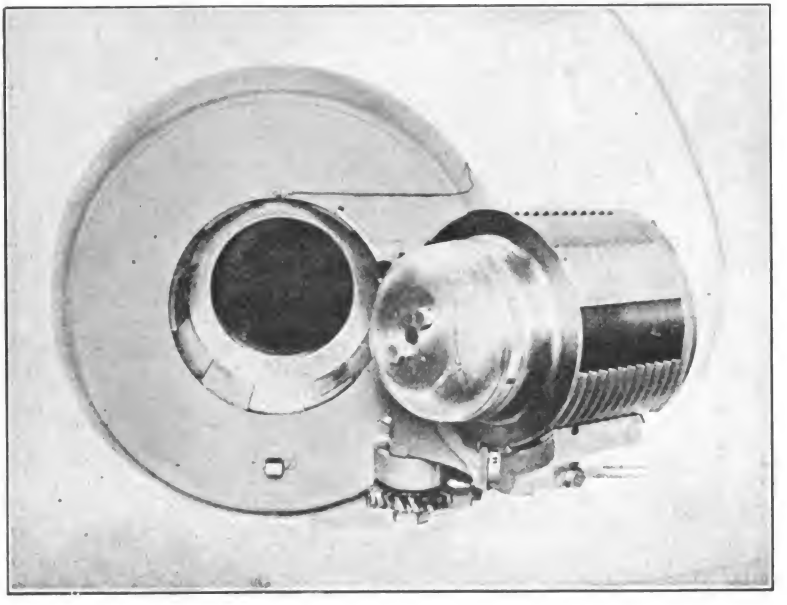

FIG. 104.—Open.

BREECH MECHANISM FOR HEAVY GUNS.

Digitized by Google

held by the pressure of the spring *s*. The tray is now unlocked from the breech. The upper front toe of the latch *L* engages in a groove in the breech block, locking the block and tray together.

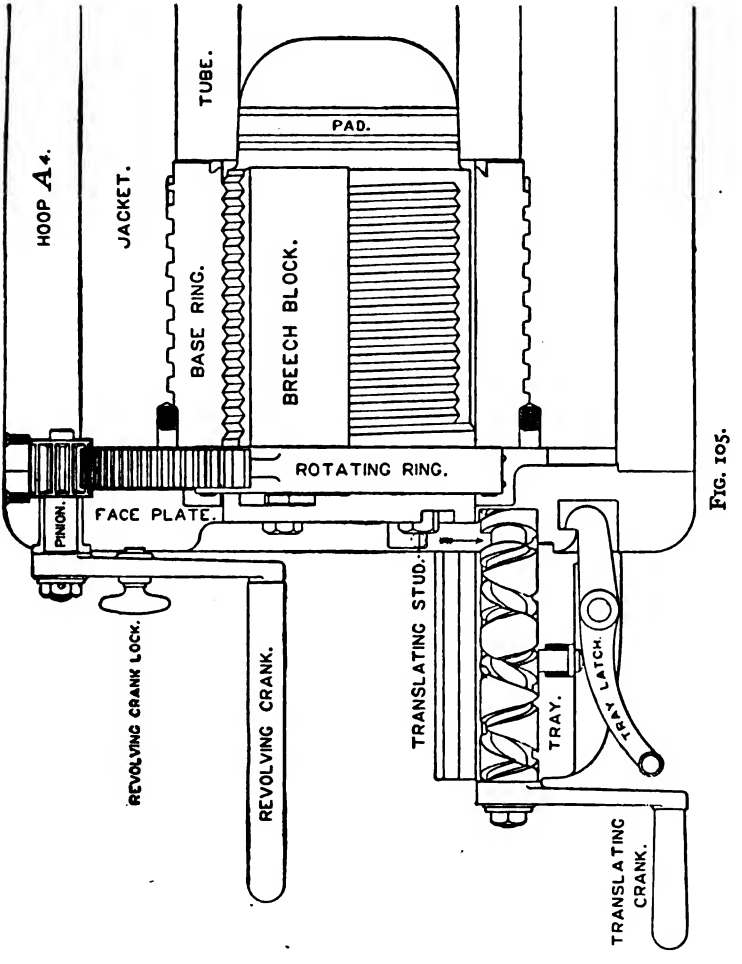

FIG. 105.

The further action of the compound gear on the last teeth of the translating rack *tr* then causes the tray to swing to the right about the hinge pin, carrying the block clear of the breech. As the tray

Digitized by Google

swings clear of the breech the locking bolt *lb* forces forward the operating stud *os* and enters a seat in the latch. The latch is thus locked in its raised position and secures the breech block against being pushed forward off the tray when open.

In closing the breech the operations are reversed in order. When the tray comes in contact with the face of the breech the operating stud *os* forces the locking bolt *lb* from its seat in the latch. The latch is depressed by the spring *s* and thus unlocks the block from the tray.

The two plugs shown in the obturator head of the breech mechanism, Fig. 104, are in the seats provided for the insertion of pressure gauges when it is desired to measure the pressure in the gun.

In recent mechanisms of this type there is added a locking device which locks the block in position when closed and insures against the opening of the block by the pressure of the powder gases. The locking bolt is withdrawn by hand before opening the block.

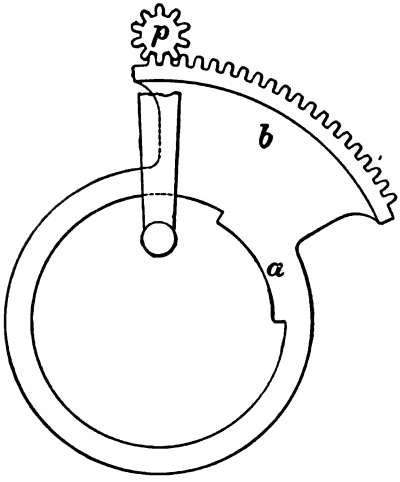

FIG. 106.

176. Older Form of Slotted Screw Breech Mechanisms for Guns.—There are mounted in our fortifications many guns equipped with the breech mechanism shown in Fig. 105.

The block is revolved by means of one crank fixed to the gun, and withdrawn and swung aside by a second crank attached to the tray. The shaft of the revolving crank carries at its end the pinion *p*, Fig. 106, which works in the rack of the rotating ring *b*. The rotating ring revolves in bearings provided in the face plate, and communicates its motion of rotation to the block through

Digitized by Google

the lug *a*, which engages in one of the slotted sectors. When the rotation of the block is completed the translating stud at the bottom of the block has entered one of the threads of the double-threaded translating roller. The other thread of the roller works in a corresponding thread cut in the tray. Rotation of the translating crank causes the block to move to the rear with a movement equal to the sum of the movements due to each of the two threads. When the front of the roller passes to the rear of the stud shown acting on the tray latch, the block is brought to a stop on the tray,

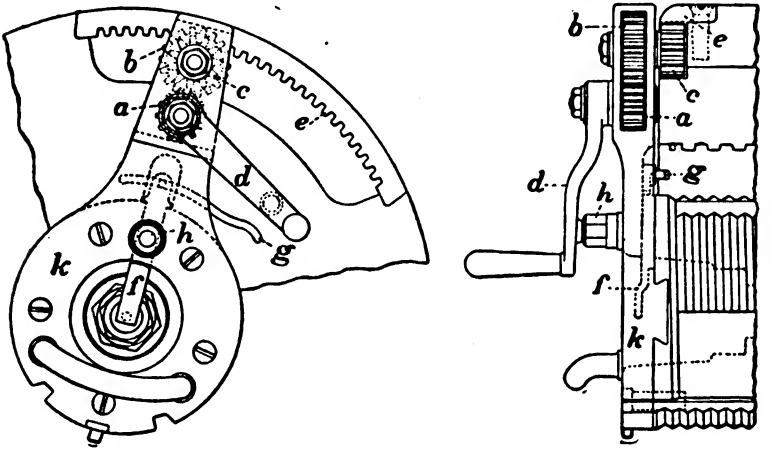

FIG. 107.

and the shock of its arrest is sufficient to release the tray latch from its hold on the lip of the recess in the gun. The tray then swings aside, carrying the block clear of the breech.

The tray is similar in general shape to the tray of the more modern mechanism shown in Fig. 102.

Older Form of Slotted Screw Mechanism for Mortars.—Seacoast mortars now being constructed have a slotted screw mechanism similar to that described in Art. 175, except that the operating crank is placed at the top instead of at the bottom of the gun.

Many of the older mortars in the service have a mechanism which

Digitized by Google

differs from the older form for guns just described only in the method of rotating the breech block. A steel plate *k*, Fig. 107, is fixed to the rear face of the breech block and extending upwards provides journals for the pinions *a*, *b*, and *c* of the rotating gear. The pinion *c* meshes in the rack *e* fixed to the gun, and when the crank *d* is turned the block is rotated to open or close. The block is withdrawn on a tray as described above. The translating stud that engages in the translating roller is seen at the bottom of the block.

The vent shield *f*, cut shorter than shown in the figure, is provided with a stud at its lower end that engages with the safety

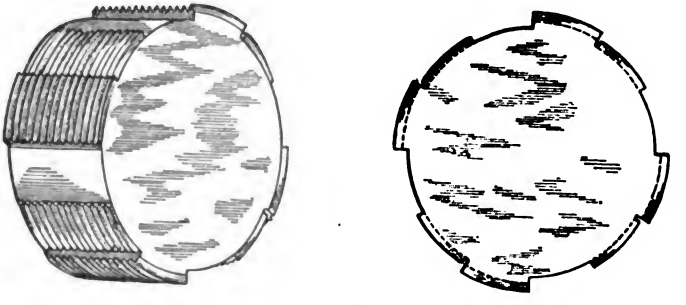

FIG. 108.

bar of the firing mechanism described in Par. 179. The stud at its upper end works in the groove *g* cut in the gun, withdrawing the safety bar as the breech is fully closed.

177. Welin Blocks.—In the slotted screw mechanism described only half the outside surface of the block is threaded. To provide for threading a larger proportion, the threaded sectors of the Welin block are built in two or three steps as shown in Figs. 108 and 109.

By this means the threaded area may cover two-thirds, three-fourths, or even a large portion of the surface of the block. A large increase in threaded area is thus secured over that obtained on a cylindrical block with alternate threaded sectors, and the block

Digitized by Google

may therefore be made smaller. The amount of rotation required in locking and unlocking is also diminished, one-twelfth of a turn sufficing for the block shown in Fig. 108, and one-sixteenth for the block of Fig. 109.

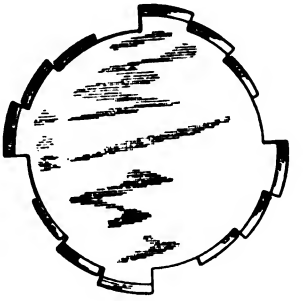

FIG. 109.

Welin blocks are used in Army 14-in. guns and in many Navy guns. The operating mechanisms of those used in Army guns are practically the same as that described in Art. 175.

Bofors Breech Mechanism.—Another method of obtaining a larger bearing surface thus permitting of shortening the block is illustrated by the Bofors breech mechanism shown in Fig. 110. The block and breech recess are very wide at the rear, thus increasing the bearing surface.

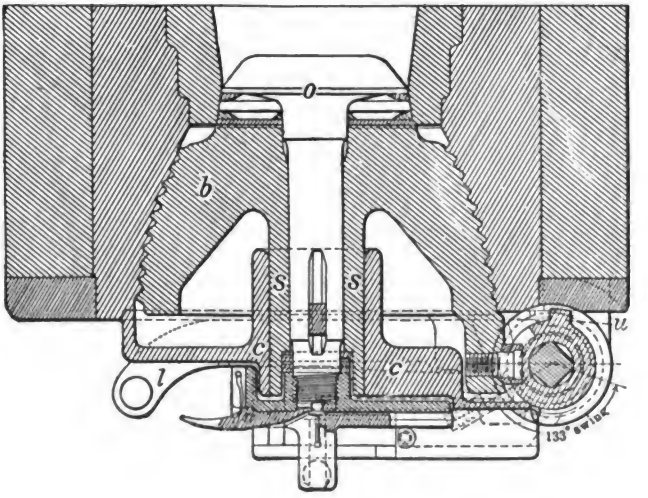

FIG. 110.

The block, *b*, is ogival in shape and has six threaded and six slotted sectors. With the ogival shape a very small retraction to

Digitized by Google

the rear is necessary before the block may be swung open. In the 6-in. gun this retraction is 1.2 ins., just sufficient to withdraw the obturator *o* from its seat in the bore. The block is supported when the breech is opened by the block carrier *c* provided with a central tube which embraces a spindle *s* formed in the block.

The mechanism is actuated by means of the lever *l*, Fig. 111, which is attached to the lower end of the hinge pin. A spool *p* mounted on the hinge pin has teeth cut near its lower end which engage in the rack *r*. The rack slides in a horizontal groove cut in the block carrier *c*, and the teeth at its left mesh with corresponding teeth on the hub of the breech block which projects through the rear face of the carrier.

When rotation of the block is completed a lug, *u*, Fig. 110, on the spool engages in a slot at the rear end of the block and translates the block slightly to the rear. Before this translation is complete the block carrier is unlocked from the gun, and swings to the rear with the block, fully uncovering the bore. The loading tray, shown in Fig. 113, the purpose of which is to protect the threads of the breech from injury as the shot is put into the bore, remains permanently in the breech. When the block is entered and rotated the tray is pushed aside by the threads on the block until it covers the slotted sector. On opening the block it is brought back into the position shown.

The Bofors mechanism is used in some of the 6-in. guns in our service.

178. Obturation.—There must be provided at the breech of the gun some device that will prevent the powder gases from passing to the rear into the threads and other parts of the breech mechanism. If any passage is open to the gases they are forced through it with great velocity by the high pressure existing in the bore. Their velocity together with their high temperature gives to them great erosive power, and the threads and other parts of the breech mechanism subject to their action are eroded, channeled, and worn away to such an extent that the breech mechanism is soon ruined and the gun is rendered useless.

Digitized by Google

In guns that use fixed ammunition the obturation is performed by the cartridge case, which expands under the pressure in the

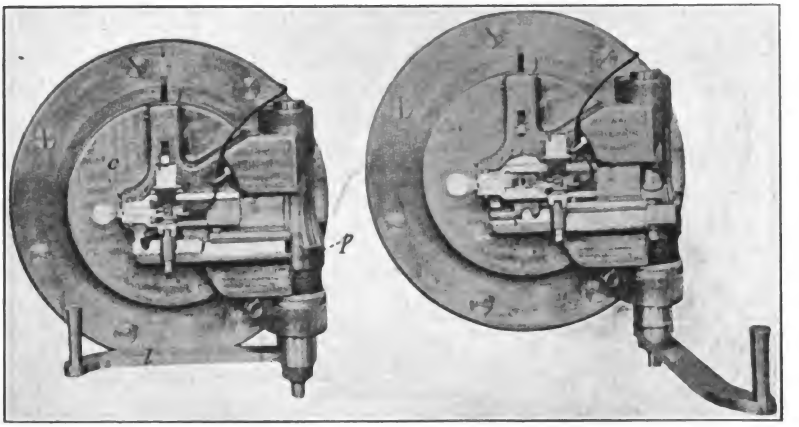

FIG. 111.—Closed.

FIG. 112.—Block Unlocked, Ready to Swing Open.

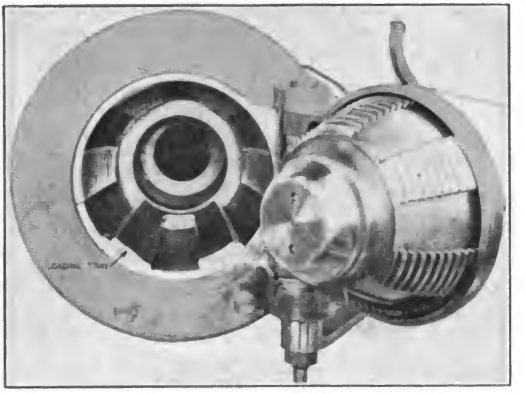

FIG. 113.—Open.

BOFORS RAPID FIRE BREECH MECHANISM.

bore to a tight fit against the walls of the gun. The breech mechanism of these guns contains, therefore, no obturator parts.

With guns using slotted screw mechanism and separate load-

Digitized by Google

ing ammunition two systems of obturation are used. They are known by the names of their inventors, DeBange and Freyre.

The DeBange Obturator.—This system is in the most general use. It is seen at *o*, Figs. 102 and 110, in the breech mechanisms already described. The details are shown in Fig. 114. The obturator consists of the steel mushroom head *h* with the spindle

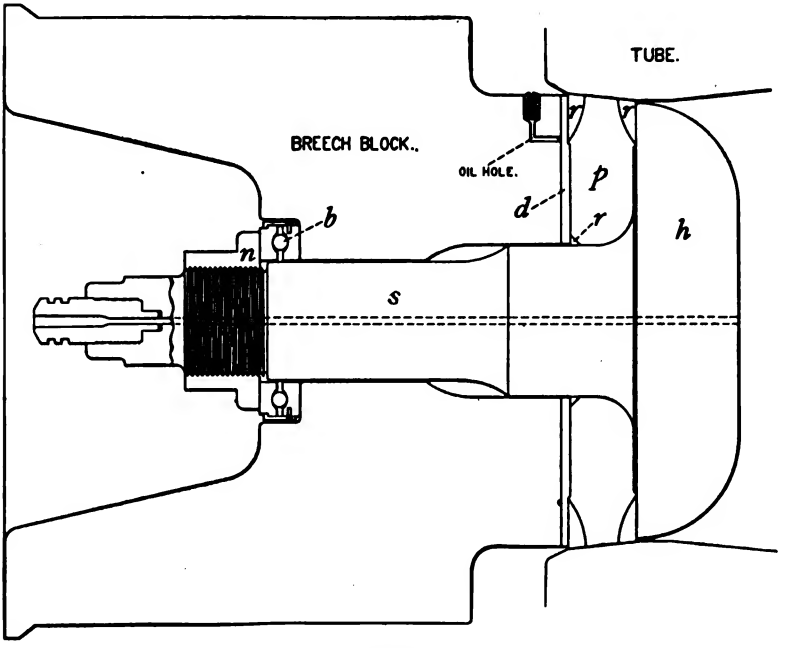

FIG. 114.

s, the pad *p*, the split steel rings *r*, and the steel filling-in disk *d*. The pad *p* is made of asbestos, tallow, and paraffine or other substance, that together form a plastic mixture that melts only at a high heat. The ingredients are mixed and then pressed into shape under a hydraulic press and protected by a cover made of canvas or of asbestos wire cloth. The split rings, *r*, Fig. 114 and Fig. 115, are hardened, and their outer surfaces, which are coned toward the front, are very carefully ground, so that their diameters

Digitized by Google

when the rings are free are 0.01 of an inch larger than the diameters of the conical seat in the bore. The edges of the rings therefore always bear against the walls of the bore.

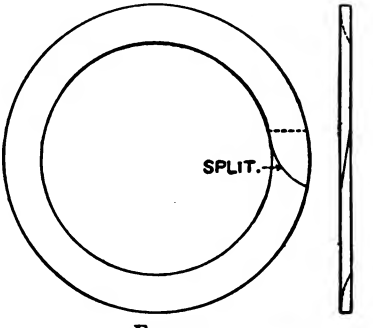

FIG. 115.

The pressure of the gases against the mushroom head compresses the elastic pad and further presses the split rings against the walls of the bore, thus effectually preventing the passage of gas to the rear.

The smaller split ring surrounding the spindle serves to prevent escape of the pad composition between the filling-in disk and the spindle.

The spindle *s* passes through a central hole in the breech block. The obturator parts are held in place by the split nut *n* clamped

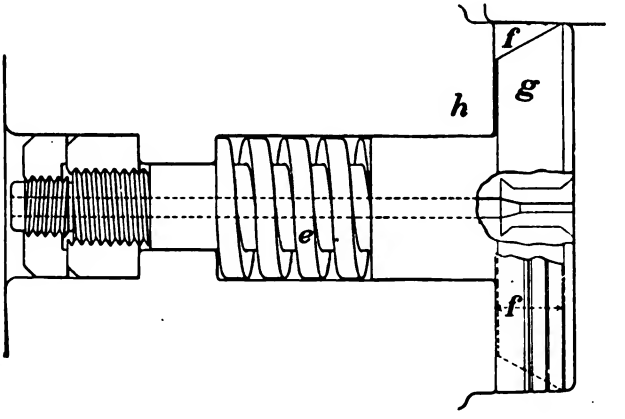

FIG. 116.

on the spindle. The nut bears against a shoulder in the block through the ball bearing *b*. It will be seen that the breech block may rotate independently of the obturator parts, so that in open-

Digitized by Google

ing the breech the rotation of the block is not affected by any sticking of the obturator to its seat in the gun. On retraction of the block the obturator is readily withdrawn from its conical seat.

A vent is drilled the full length of the obturator spindle to afford a passage for the flames from the primer to the powder charge in the gun. The two grooves at the rear end of the spindle serve for the attachment of the firing mechanism.

The Freyre Obturator.—The Freyre obturator, shown in Fig. 116, is used in the old model 3.6-in. field mortar. The head *g* is cone shaped. In rear of it resting against the head of the breech block *h* is the cone-shaped steel ring *f*. The head *g* is constantly pressed forward by the spring *e*. Under the action of the powder pressure the head is forced to the rear and expands the ring *f* against the walls of the bore.

With this obturator the breech mechanism is comparatively short and light in weight, which is an important advantage in a field mortar. The obturator ring with its thin front edge is, however, readily subject to accidental injury, which would render the obturation imperfect.

179. Firing Mechanism.—A seat for the firing mechanism is formed on the rear end of the obturator spindle by two grooves, *g*, Fig. 117, cut in the spindle. A hinged collar *k* embraces the end of the spindle. The housing *h* screws over the collar and is locked to it by the spring pin *p*. The ejector *e* pivoted in the housing has at its lower end a forked seat for the head of the primer. Projecting ribs on the front face of the housing form guides for the slide, *d*, Fig. 117 and Fig. 118. The slide is moved up or down by means of the handle *b*, the catch lever *a* being first pressed to release a holding catch. Pivoted at *o* in the slide is the slotted firing leaf *l*, which carries the insulated brass contact clip *c* and is provided with an eye into which the hook of the lanyard engages.

The slide being at its uppermost position, the primer *r* is inserted in the vent in the obturator spindle, the head of the primer resting in its seat in the ejector. The slide is then pushed down. The

Digitized by Google

firing leaf *l*, by means of the slot, embraces the insulated primer wire just in front of the button at its outer end. The two halves of the contact clip *c* spring apart and embrace the uninsulated button.

If the breech is closed, a pull on the lanyard rotates the firing leaf *l* about its axis *o*, drawing out the primer wire and firing the

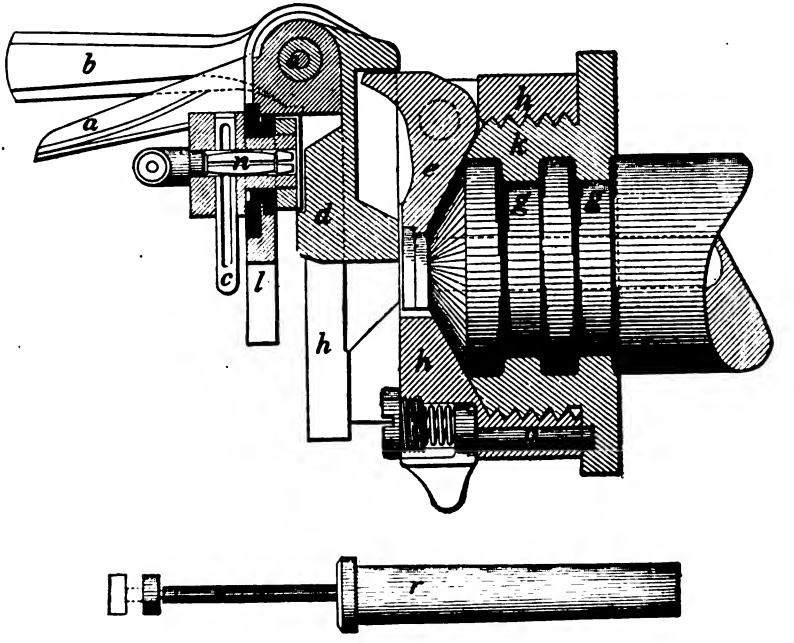

FIG. 117.

primer by friction; or the closing of the electric circuit, which enters the mechanism through the electric terminal *n*, will fire the primer electrically. The electric current passes through insulated parts to the platinum firing bridge inside the primer and thence through the body of the primer to the metal of the gun and to the ground.

Firing by either of these methods cannot be accomplished unless the slide *d* is all the way down and the breech is fully closed.

Digitized by Google

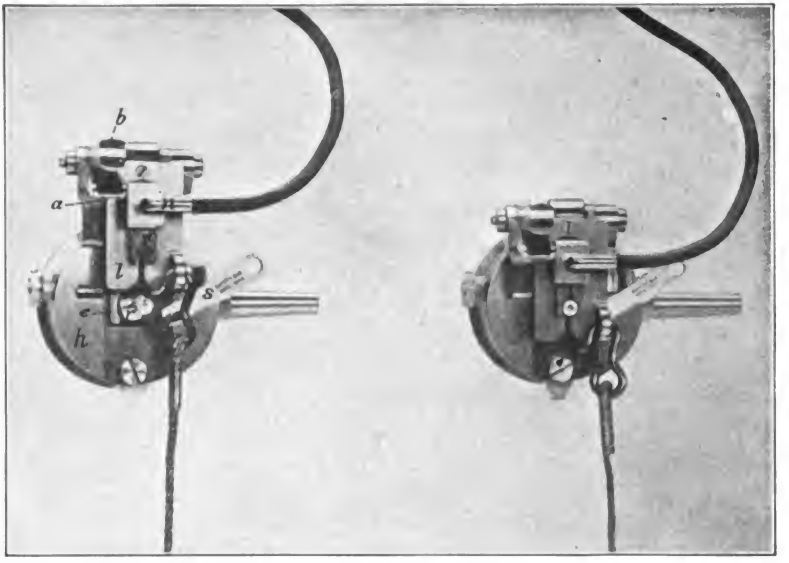

FIG. 118.—Slide Raised and Primer Inserted.

FIG. 119.—Slide Lowered Ready for Firing.

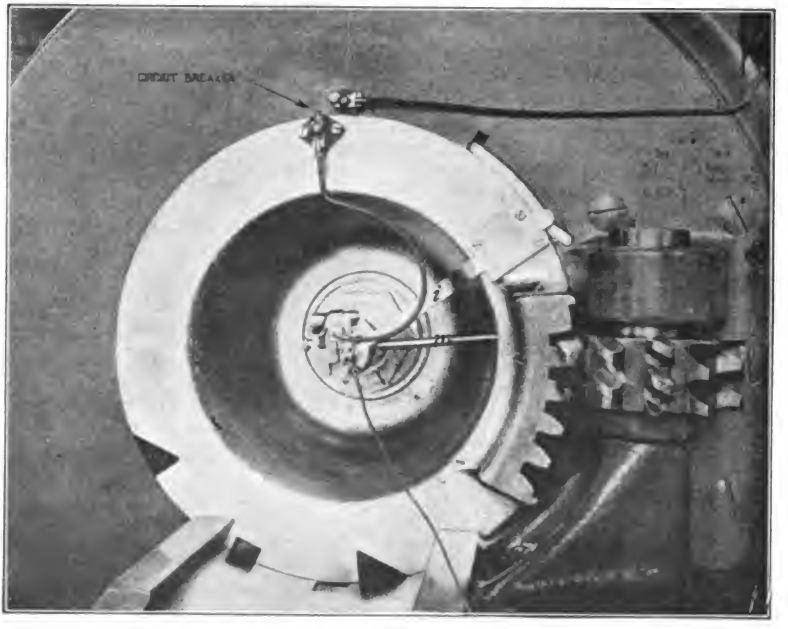

FIG. 120.—Breech Partially Unlocked. Safety Bar Forced in by Cam Slot, and Electric Circuit Broken.

Digitized by Google

A safety lug on the right side of the housing engages in a groove in the firing leaf and prevents the latter being drawn to the rear before the slide is all the way down. The contact clip engages the primer button only in the last part of the downward movement of the slide.

The inner end of the safety bar, *s*, Fig. 118, also engages the firing leaf. The outer end of the safety bar embraces a stud projecting from the safety bar slide, *i*, Fig. 120, and the safety bar slide carries at its outer end a stud that engages in a groove cut in the gun. The groove is so shaped as to withdraw the safety bar only at the last part of the movement of the block in closing. At this moment also the parts of the electric circuit breaker, fixed one to the block and the other to the gun, Fig. 120, come into contact.

It will be seen, therefore, that the primer cannot be fired until the breech block is locked.

We have seen that the breech block rotates independently of the obturator spindle. In order then that the firing mechanism may always be in an upright position when the breech is closed, a guide bar, *m*, Fig. 120, fixed at one end to the housing and at the other end to the block, causes the mechanism to rotate on the spindle with the block.

The fired primer is ejected by lifting the slide. The lug on the slide, *d*, Fig. 117, strikes the upper part of the ejector lever, giving to the lower end a sharp movement to the rear, which throws the primer clear of the piece.

180. Sliding Wedge Breech Mechanism.—The method of closing the breech by means of a sliding wedge-shaped block is used principally by Krupp, and to some extent by other makers. The jacket of the gun, *a*, Fig. 121, extends to the rear of the tube, and the bore of the gun is continued through the extension. A slot cut transversely through the jacket just in rear of the tube forms a seat for the sliding breech block *k*. The front surface of the slot is a plane surface perpendicular to the axis of the bore, the rear surface is cylindrical and inclined to the axis of the bore. Two guides *b b'* similarly inclined guide the breech block in its move-

Digitized by Google

ments. The breech block is of the same shape as the slot and slides in and out to close and open the breech. The greater part of the movement of the block is accomplished rapidly by means of the translating screw *c*, which is held in two bearings at the ends of the block and works in a half nut *d* on the gun. The screw is turned by means of the handle *e*, which is removed from the position in which it is shown and applied to the end of the screw *c*. The final movement in closing and the initial movement in opening are effected more slowly and more powerfully by the locking screw *g*. A nut *f* carried on the locking screw locks the block when closed.

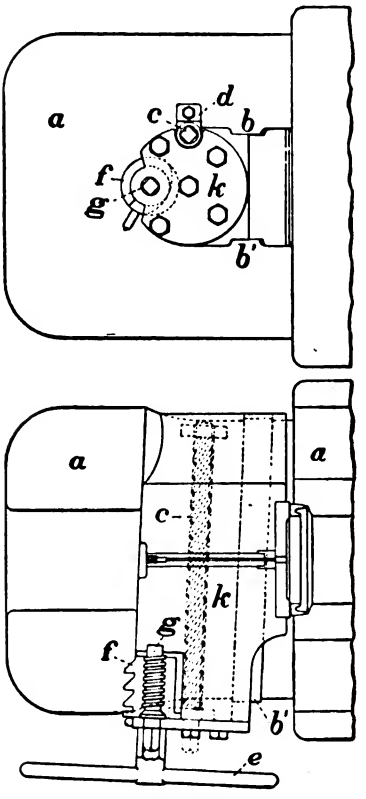

FIG. 121.

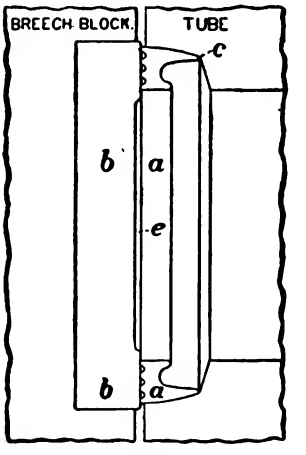

FIG. 122.

Obturation.—In guns using separate loading ammunition obturation was formerly effected by means of a steel obturator plate, *b*, Fig. 122, carried in the block, and a steel cup-shaped ring *a*, called the Broadwell ring, seated in the end of the bore. The pressure of the gases forces the ring back tightly against the plate

Digitized by Google

and at the same time presses the thin lip *c* against the walls of the bore. The grooves shown in the rear surface of the ring serve as air packing and also to collect any dirt that may be on the surface of the plate. The hollow *e* in the plate also serves to collect fouling and to remove it from the bearing surface. The plate is forced tightly against the ring by the last movement of the locking screw in closing.

In modern separate loading guns obturation is effected by using a short cartridge case for the last section of the charge.

The main objection to the sliding wedge-breech mechanism is the extra weight of metal required at the breech end of the gun to secure the necessary strength.

181. Automatic and Semi-automatic Breech Mechanisms.—In guns provided with automatic breech mechanism the energy of recoil or the pressure of the powder gases is utilized to open the breech, withdraw the fired shell, insert a new cartridge and close the breech. After the firing of the first round the only operation necessary for firing the succeeding rounds is pulling the trigger. The automatic mechanism is at present applied only to guns of small caliber that use the small arm cartridge or fire a projectile weighing not more than a pound.

The semi-automatic mechanism is applied to guns of medium caliber, up to 6 ins., and efforts are being made to adapt it to the larger guns. The breech is opened by mechanism that is operated during the recoil or counter recoil of the piece, and if fixed ammunition is used the fired shell is ejected. At the same time power is stored in a spring to be later used in closing the breech.

In some mechanisms the insertion of the succeeding round by hand operates the breech-closing mechanism. In others the pulling of a lever after the insertion of the round actuates this mechanism.

Example of Semi-automatic Mechanism.—As a good example of a semi-automatic breech mechanism that used in an experimental 2.38-in. field gun and shown in Figs. 123 to 125, will now be described.

Digitized by Google

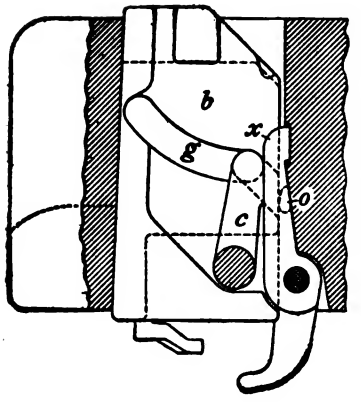

FIG. 123.

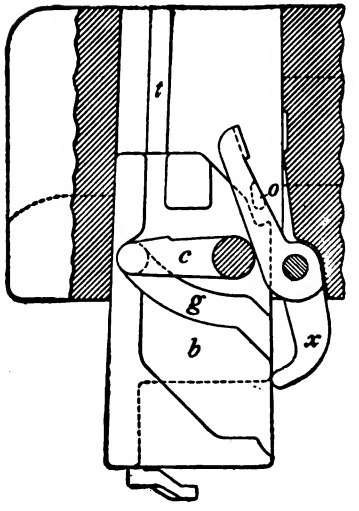

FIG. 124.

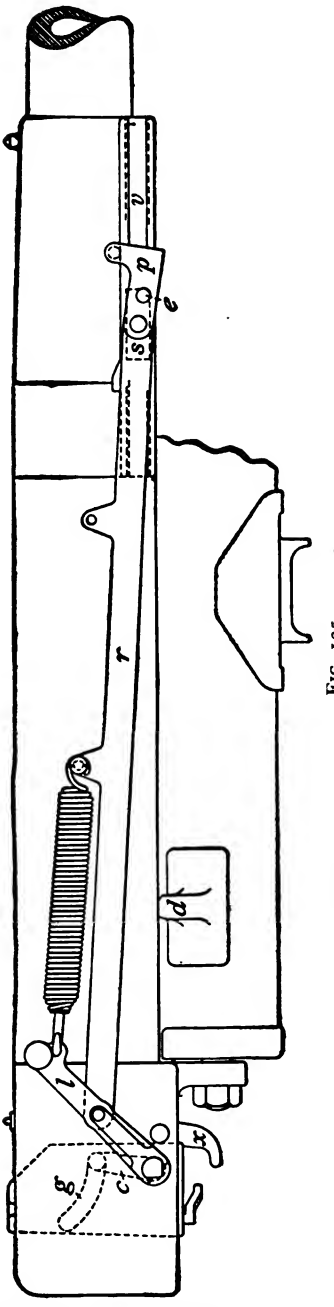

FIG. 125.

2.38 Field Gun, Semi-automatic Breech Mechanism.

Digitized by Google

The wedge-shaped breech block *b* is seated in a vertical slot cut through the extension of the jacket. Projecting guide ribs, *t*, Fig. 124, in the slot engage in grooves cut in the sides of the block. The block is lowered or raised to open or close the breech by means of the crank *c*. A stud at the end of the crank engages in the cam groove *g* on the right side of the block, the groove being so shaped that the crank gives vertical movement to the block. On the outer end of the crank shaft is the operating lever, *l*, Fig. 125, attached to which is the operating bar *r*, and the coiled operating spring.

The forward end of the operating bar embraces the pin protruding from the sliding piece *s*, which slides in an undercut groove *v* in the locking ring of the piece. The pawl *p*, pivoted on the same pin, has at its upper end a stud which rests on a shoulder above the groove. The end of a spring pin, *e*, in the pawl works in a slot cut in the sliding piece *s* and limits the motion of the pawl.

The mechanism above described is fixed to the piece and moves with the piece in recoil.

A stud, *d*, is fixed on the recoil cylinder of the carriage. When the piece recoils, carrying the mechanism with it, the pawl *p* is lifted by the stud and falls back into the position shown as soon as it has passed the stud. As the piece returns in counter recoil the pawl is engaged by the stud and held. The piece continues its forward movement. The slide *s* moves, relatively, to the rear in its slot, causing the bar *r* to rotate the operating lever *l* against the tension of the coiled spring.

The rotation of the lever lowers the breech block and opens the breech. The block in the last part of its movement operates the forked extractor *x*, which ejects the empty cartridge case.

The stud on the upper end of the pawl *p* has now moved up the incline at the rear end of the shoulder on which it slides, lifting the pawl, disengaging it from the stud *d* on the carriage, and allowing the piece to finish its movement into battery. The pawl *p* being disengaged from the stud the breech block moves upward under the action of the operating spring until the curved locking

Digitized by Google

studs *o* on each arm of the extractor, Fig. 124, engage in the corresponding recesses cut in the sides of the block. The curved shape of the locking studs and recesses, together with the directions in which the engaging parts are constrained to move, prevent further movement of the parts and the block is therefore locked open against the tension of the operating spring.

The rear part of the jacket extension is trough shaped to permit the ready insertion of the cartridge into the breech. As the cartridge is pushed into the breech with force its flanged head engages the extractor arms and forces the locking studs *o* out of the recesses. The action of the operating spring through the lever *l* and the crank *c* then lifts the block and closes the breech.

Breech Mechanism of the New Field Gun.—The breech mechanism of the 3-in. gun model of 1916 is quite similar to that just described with the exception that the automatic opening feature is not used. Instead the lock is opened by a lever similar to *l*, operated by hand. Movement of this lever compresses a spring similar to that shown in Fig. 125, except that it acts by compression instead of extension and its rear end bears against a fixed part of the gun. The block is held in the open position against the action of the spring by two spring plungers which are released when the rim of the carriage case strikes the extractor. The spring then closes the block.

Digitized by Google

CHAPTER VII

RECOIL AND RECOIL BRAKES

182. Stresses on the Gun Carriage.—The stresses to which a gun carriage is subjected are due to the action of the powder gases on the piece. Gun carriages are constructed either to hold the piece without recoil or to limit the recoil to a certain convenient length. In the first case the maximum stress on the carriage is readily deduced from the maximum pressure in the gun. In the second case it becomes necessary to determine all the circumstances of recoil in order that the force acting at each instant may be known, and the parts of the carriage designed to withstand this force and to absorb the recoil in the desired length.

Velocity of Free Recoil.—Suppose the gun to be so mounted that it may recoil horizontally and without resistance. On explosion of the charge the parts of the system acted upon by the powder gases are the gun, the projectile, and the powder charge itself, the latter including at any instant both the unburned and the gaseous portions. While the projectile is in the bore, if we neglect the resistance of the air, none of the energy of the powder gases is expended outside the system. The center of gravity of the system is, therefore, fixed and the sum of the quantities of motion in the different parts is zero. The movement of the powder gases will be principally in the direction of the projectile. We may, therefore, write

$$Mv_f = mv + \mu v_c, \quad . \quad . \quad . \quad . \quad . \quad . \quad . \quad . \quad (1)$$

in which M, m, and μ are the masses of the gun, projectile, and charge of powder, respectively; and v_f, v, and v_c the velocities of the same parts. The mass of the charge is the same whether the charge is unburned or partially or wholly burned.

Digitized by Google

The velocity of the projectile at any point in the bore of the gun may be determined from the formulas of interior ballistics.

As in interior ballistics (see Art. 82) we shall assume that the velocity of the center of the mass of the products of combustion is half that of the projectile.

Writing $v/2$ for v_c in Eq. (1), replacing masses by weights, and solving for v_f we obtain

$$v_f = \frac{p+\frac{1}{2}c}{W} v, \quad \ldots\ldots\ldots \quad (2)$$

W, p and c being the weight of the gun, projectile, and charge. At the muzzle of the gun v becomes the initial velocity V, and for the velocity of free recoil at that instant,

$$v'_f = \frac{p+\frac{1}{2}c}{W} V. \quad \ldots\ldots\ldots \quad (3)$$

This value v'_f is not the maximum velocity of free recoil, though it is the maximum value reached while the velocities of the gun and the projectile are connected. At the departure of the projectile the bore of the gun is still filled with gases, which continue to exert pressure on the breech and increase the velocity of recoil. The value v'_f obtained by the above equation is about $\frac{7}{10}$ of the maximum velocity of free recoil.

Experiments with the Sebert velocimeter indicate that with smokeless powder the maximum velocity of free recoil may be obtained from Eq. (3), by substituting for the quantity $\frac{1}{2}cV$ the quantity $4700c$. The equation then becomes

$$V_f = \frac{pV+4700c}{W}. \quad \ldots\ldots\ldots \quad (4)$$

183. Determination of the Circumstances of Free Recoil.— In the above equations the velocity of free recoil is expressed as a function of the velocity of the projectile, and we have in the ballistic formulas the velocity of the projectile expressed as a func-

Digitized by Google

tion of the travel of the projectile. We might therefore now determine the velocity of free recoil as a function of the travel of the projectile. But in the determination of all the circumstances of recoil it is necessary to know the relations between the velocity, time, and length of recoil; and in order to arrive at these relations by means of Eq. (2), we must obtain an expression for the velocity of the projectile as a function of the time.

With the velocity of the projectile expressed as a function of the time, Eq. (2) will then express the velocity of free recoil as a function of the time, and with the velocity of recoil so expressed we may obtain the length of recoil from the equation

$$x = \int v_r dt, \quad \ldots \ldots \quad (5)$$

x representing the length of free recoil.

We thus obtain the complete relations between the velocity, time, and length of free recoil.

Velocity of the Projectile as a Function of the Time.—The velocity of the projectile as a function of the time is obtained in the following manner. Representing the travel of the projectile by u, we have

$$v = \frac{du}{dt}, \quad \text{from which} \quad t = \int \frac{1}{v} du, \quad \ldots \ldots \quad (6)$$

That is, t is the area under the curve whose ordinates are values of $1/v$ and whose abscissas are values of u.

Therefore if we construct such a curve the area under the curve from the origin to any ordinate will be the time corresponding to the velocity whose reciprocal is represented by the ordinate.

Construct the curve v, Fig. 126, from the ballistic formulas, the abscissas representing travel, the ordinates velocity of the projectile.

Take the value of v as expressed by any ordinate and lay off its reciprocal on the same ordinate, to any convenient scale. The

Digitized by Google

curve $1/v$ in the figure is obtained in this way. Its ordinates are values of $1/v$, its abscissas are values of u. The areas under the curve are therefore values of t, Eq. (6).

For very small values of v the ordinates $1/v$ will be very large and will not fall within the limits of an ordinary drawing. We cannot determine, then, from the drawing, the area under the first part of the curve. But we can obtain a sufficiently close approximation to this area in the following manner. We may assume, without material error in the determination of this small area,

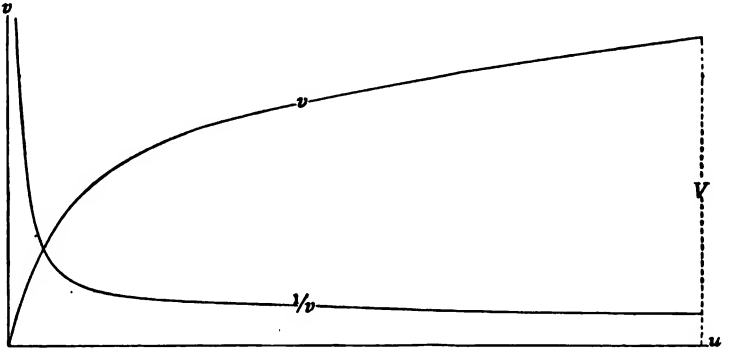

FIG. 126.

that the velocity of the projectile as a function of the time is expressed by the equation of a parabola

$$v = \sqrt{2pt}. \quad . \quad . \quad . \quad . \quad . \quad . \quad . \quad . \quad (7)$$

Multiplying by dt and integrating, we have, since $\int v\,dt = u$,

$$u = \int \sqrt{2pt}\,dt = \tfrac{2}{3}\,(2p)^{\frac{1}{2}} t^{3/2}. \quad . \quad . \quad . \quad . \quad . \quad (8)$$

At the instant at which the shot leaves the bore, v in Eq. (7) becomes the initial velocity V, and denoting the corresponding time by t' we obtain from that equation

$$V = \sqrt{2pt'} \quad \text{or} \quad \sqrt{2p} = \frac{V}{\sqrt{t'}}$$

Digitized by Google

Substituting this value of $(2p)^{\frac{1}{2}}$ in Eq. (8), t in that equation becoming t' and u the total travel of the projectile U, we obtain

$$t' = \frac{3}{2}\frac{U}{V}.$$

t' is then the total area under the curve $1/v$, Fig. 126, and subtracting from t' the area that can be measured we obtain the area under that part of the curve near the origin that is not plotted.

Having now from the v curve the values of $v=f(u)$ and from the areas under the $1/v$ curve the values of $t=f(u)$ we may, by combination, determine the desired values of $v=f(t)$.

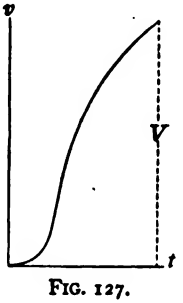

FIG. 127.

Using as abscissas the areas under the curve $1/v$, which are the values of t, and as ordinates the corresponding ordinates of the curve v, which are the velocities, we obtain the curve of the velocity of the projectile as a function of the time, Fig. 127.

Since the velocity of free recoil as given by Eq. (2) is equal to the velocity of the projectile multiplied by a constant, the curve in Fig. 127 becomes at once the curve of velocity of free recoil, if we consider the scale of the ordinates as multiplied by the coefficient of v in Eq. (2).

184. Maximum Velocity of Free Recoil.—The curve shown in Fig. 127 gives the velocity of free recoil only while the projectile is in the bore, and as previously explained the velocity of recoil has not reached its maximum when the projectile leaves the piece. The value of the maximum velocity of recoil is given by Eq. (4). With this value as an ordinate, Fig. 128, draw a line parallel to the axis of t and continue the curve of velocity already drawn until it is tangent to this line. It is reasonable to infer that the rate of change in the curvature of the curve of recoil will continue uniform from the point corresponding to the muzzle of the gun to the point of maximum velocity, and the curve so continued will with sufficient exactness express the circumstances

Digitized by Google

of motion. A slight error made in the selection of the point of tangency will be without practical effect on the determinations to be later made from this curve. The abscissa of the point of tangency is the time corresponding to the maximum velocity of free recoil.

It is also the total time of action of the powder gases on the gun and is represented by τ.

As, by assumption, there is no resistance to recoil, the maximum velocity attained will never be reduced, and the curve will extend indefinitely parallel to the axis of t.

The tangent to the curve at any point is a value of dv_f/dt, and

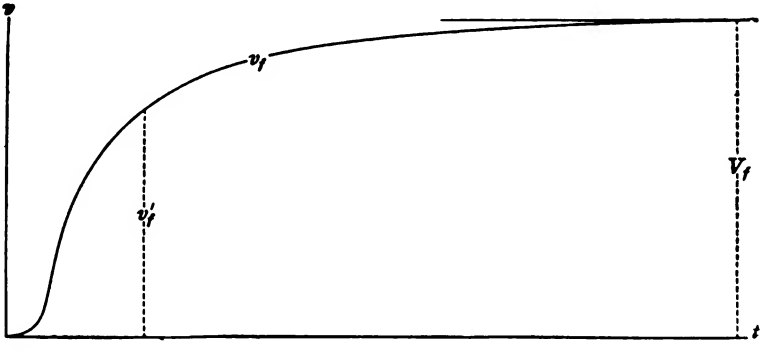

FIG. 128.

therefore represents the acceleration at the instant of time represented by the abscissa of the point. The tangent has a maximum value at the point of inflexion of the curve, the point where the curve ceases to be convex toward the axis of t, and becomes concave. This point is therefore the point of maximum acceleration. The maximum acceleration being due to the maximum powder pressure in the gun, the abscissa of the point of inflexion is the time of the maximum pressure.

Since, Eq. (5), $x = \int v_f dt$, the area under the curve v_f, Fig. 128, from the origin to any ordinate is the length of free recoil corresponding to the velocity represented by the ordinate.

Digitized by Google

Representing by E_f the area under the curve up to the time τ we have,

$$E_f = \int_{t=0}^{t=\tau} v_f dt. \quad \ldots\ldots\ldots \quad (9)$$

PROBLEMS

1. The 3-in. field gun with the parts recoiling weighs 950 lbs. The weights of projectile and charge are 15 lbs. and 1.5 lbs. respectively. The muzzle velocity is 1700 ft. per sec.

Determine the velocity of free recoil at the time the projectile reaches the muzzle and the maximum velocity of free recoil.

2. The maximum pressure in the 3-in. field gun referred to in Problem 1 is 32,000 lbs. per sq. in. The travel of the projectile at the muzzle is 74.54 ins.

Using Le Duc's formulas Eqs. (121) and (123) Art. 97, determine the velocity of the projectiles as a function of the travel for travels of 12, 24, 48 and 60 ins., and plot the curve of velocity as a function of travel.

4. From the plotted curve in Problem 2, determine and plot the curve of reciprocals of velocity as a function of the travel.

5. From the data in Problems 3 and 4, determine and plot the curve of velocity of the projectile as a function of the time. Determine also the scale of velocity to be used so that the plotted curve may represent the curve of velocity of free recoil as a function of the time. (See Art. 183.)

6. From the plotted curve in Problem 5, determine τ and E_f.

185. Retarded Recoil. Total Resistance to Recoil Constant.—In the discussion thus far we have neglected all resistances and have considered the movement of the gun in recoil as unopposed. When the gun is mounted on a carriage the recoil brakes, of whatever character, begin to act as soon as recoil begins, and consequently the velocity of recoil is less at each instant than the velocity shown by the curves just determined.

It is evident that the higher the resistance offered by the recoil brakes the shorter will be the total length of recoil. A little consideration will show that if the total resistance to recoil is made constant throughout the recoil its value will be less than the maximum value of a variable total resistance which will stop the gun in the same length of recoil.

For a given length of recoil the constant total resistance will

Digitized by Google

therefore produce less strain in the carriage, and for this reason is usually adopted except in special cases to be referred to later.

In the following discussion we will assume the total resistance to recoil constant throughout the recoil, and determine the relation between that resistance and the length of recoil.

Relation between Length of Recoil and Total Constant Resistance to Recoil—

Let M represent the mass of the gun and recoiling parts;
F, the total pressure of the powder gases over the cross-section of the bore at any time;
R, the total constant resistance to recoil;
τ, the total time the powder gases act on the gun;
L, the total length of recoil;
$V_{r\tau}$, the velocity of retarded recoil at the time τ;
$E_{r\tau}$, the distance recoiled at the time τ with the resistance R acting;
x, the distance recoiled at any time t.

At any instant prior to the time the powder gases cease to act on the gun we evidently have,

$$M\frac{d^2x}{dt^2}=F-R. \quad . \quad . \quad . \quad . \quad . \quad . \quad . \quad . \quad (10)$$

Multiplying by dt and integrating we have,

$$M\frac{dx}{dt}=\int Fdt-Rt. \quad . \quad . \quad . \quad . \quad . \quad . \quad . \quad (11)$$

The constant of integration is o, since $\frac{dx}{dt}=0$ when $t=0$. At the particular time τ when the powder gases cease to act we have $t=\tau$, $\frac{dx}{dt}=V_{r\tau}$ and $\int Fdt=V_f$. Substituting these values in the above equation we have,

$$V_{r\tau}=V_f-\frac{R}{M}\tau. \quad . \quad . \quad . \quad . \quad . \quad . \quad . \quad . \quad (12)$$

Digitized by Google

Similarly, integrating Eq. (11) with respect to t and taking values at the time τ, we have,

$$E_{r\tau} = E_f - \frac{R}{2M}\tau^2. \quad \ldots\ldots\ldots \quad (13)$$

The values of τ and E_f were obtained in Art. 184.

Since at the time τ, and thereafter, no force is acting on the gun except the constant resistance R, we may now equate the energy of motion of the gun with the work of R over the remaining length of recoil. Doing this we obtain

$$R(L - E_{r\tau}) = \frac{MV^2_{r\tau}}{2}. \quad \ldots\ldots\ldots \quad (14)$$

Eliminating $V_{r\tau}$ and $E_{r\tau}$ by Eqs. (12) and (13) and solving for R we obtain

$$R = \frac{MV^2_f}{2(L + V_f\tau - E_f)}, \quad \ldots\ldots\ldots \quad (15)$$

from which we can determine the numerical value of R in terms of L or of L in terms of R.

186. Velocity of Retarded Recoil as a Function of Time and of Space.—Let x be the distance through which the gun has recoiled at the time t and let v_r be the velocity of retarded recoil at this time. The time rate at which R is taking velocity out of the system is $\frac{R}{M}$, and the total velocity taken out of the system by R at any instant will be given by the ordinate of a right line which passes through the origin of coordinates and makes an angle with the axis of t whose tangent is $\frac{R}{M}$. This line is marked c in Fig. 129. The remaining velocity at any instant will be given therefore by the difference between the ordinate to v_f and that to oc. Plotting these differences we get the curve of the velocity of retarded recoil as a function of time as indicated by v_n in the figure.

Digitized by Google

The length of retarded recoil corresponding to any velocity of retarded recoil represented by an ordinate of the curve v_{rt} is the area under the curve from the origin to the given ordinate.

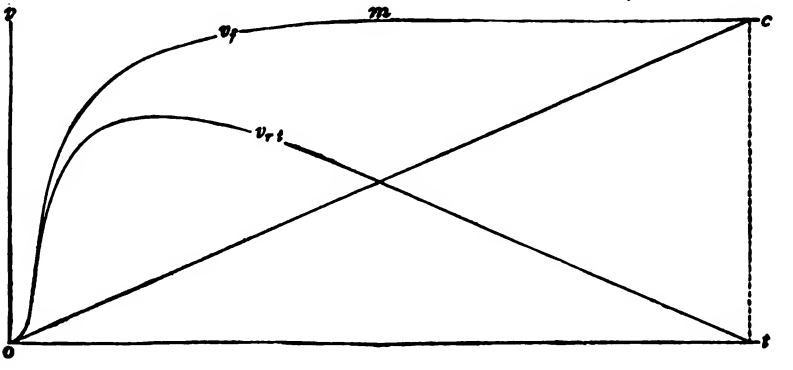

FIG. 129.

We may now construct the curve of retarded recoil as a function of the distance recoiled. To construct a point of the curve, measure the area under the curve v_{rt} in Fig. 129 from the origin to any ordinate; use the value of this area as an abscissa, and use the

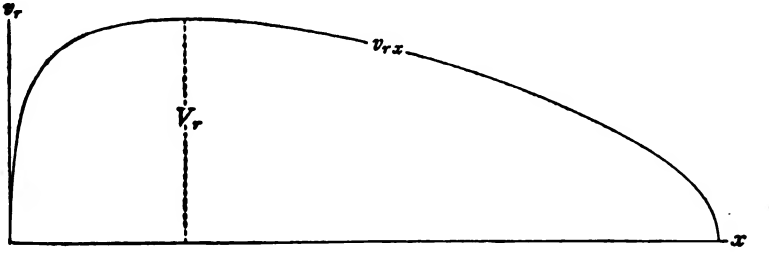

FIG. 130.

selected ordinate of the curve v_{rt} as an ordinate. The curve v_{rx} in Fig. 130, constructed in this manner from the curve v_{rt} in Fig. 129, represents the velocity of retarded recoil as a function of the distance recoiled.

The relation between the velocity and distance of retarded

Digitized by Google

recoil after the time τ can also be obtained from a consideration of the energy in the system. We have, as in obtaining Eq. (14),

$$R(L-x)=\frac{Mv_r^2}{2}. \quad \ldots\ldots\ldots \quad (16)$$

Whence,

$$v_r=\sqrt{\frac{2R(L-x)}{M}}. \quad \ldots\ldots\ldots \quad (17)$$

This is the equation of a parabola with its vertex at $x=L$.

PROBLEMS

1. The total length of recoil of the 3-in. field gun referred to in Problems 1 to 6, Art. 184, is to be 45 ins.

What constant resistance to recoil is required?

2. With the determined constant resistance to recoil acting, determine and plot the curve of velocity of retarded recoil as a function of the time.

3. From the curve obtained in Problem 2, determine and plot the curve of velocity of retarded recoil as a function of distance recoiled.

187. Recoil Systems.—The recoil system of a gun carriage consists of a recoil brake for controlling the recoil and limiting its length, a counter recoil mechanism for returning the gun to the firing position and keeping it there, and a counter recoil brake or buffer to soften the shock as the gun runs into the firing position.

Recoil brakes of the friction type were formerly used. Pneumatic brakes were also used to some extent. Both have been entirely superseded by the hydraulic recoil brake.

Hydraulic Brakes.—A hydraulic recoil brake consists of a cylinder filled with liquid, and a piston. Relative movement is given to the cylinder and piston by the recoil, and provision is made for the passage of the liquid from one side of the head of the piston to the other by apertures cut in the piston or in the walls of the cylinder. The power of the brake lies in the pressure produced in the cylinder by the resistance offered by the liquid to motion through the apertures.

If the area of the apertures is constant it is evident that the

Digitized by Google

resistance to flow will be greater as the velocity of the piston or the velocity of recoil is greater. Therefore the pressure in the cylinder, which measures the resistance offered, will vary with the different values of the velocity of recoil. If, however, the apertures are constructed in such a manner that the area of aperture increases when the velocity of the piston increases and diminishes

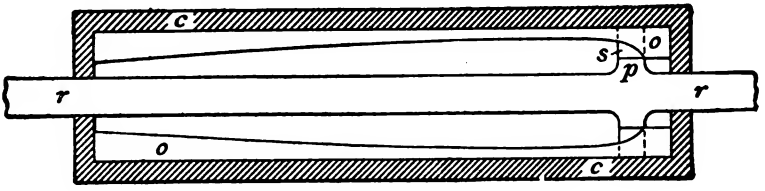

FIG. 131.

when that velocity diminishes, the variation in the area of aperture may be so regulated that the pressure in the cylinder will be constant or will vary in such a manner as to keep the total resistance to recoil constant, or to make it vary in any manner desired.

Hydraulic Brake with Variable Orifice.—The mode of action of the hydraulic brake with variable orifices will be understood from Fig. 131, which represents a longitudinal section through a recoil cylinder of the form used in our seacoast carriages.

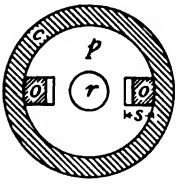

FIG. 132.

Fig. 132 represents a cross-section through the cylinder.

To the walls of the cylinder *c* are fastened two bars *o* called throttling bars, of varying cross-section as shown. The piston *p* is stationary, the piston rod *r* being fixed to a stationary part of the carriage. The cylinder *c* is attached to the gun and moves to the rear in recoil.

The direction of the movement of the cylinder is to the right in the figure. The figure shows the relative positions of cylinder and piston at the beginning of recoil.

Through the piston head are cut two slots or apertures, *s*,

Digitized by Google

through which the liquid is forced from one side of the piston to the other as the *cylinder* moves in recoil. Each slot has the dimensions of the maximum section of the throttling bar, with just enough clearance to permit operation. The area of orifice open for the flow of liquid at any position of the piston is therefore equal to the area of the slots minus the area of cross-section of the throttling bars at that point; and the profile of the throttling bars is so determined that the resistance to the flow of the liquid, or the pressure in the cylinder, is made constant or variable as desired.

In some hydraulic brakes, throttling bars are not used and no slots are cut in the piston. In these brakes the varying apertures are obtained by cutting grooves of varying width or depth on the interior of the cylinder. There are also other means of obtaining varying apertures along the cylinder. Some of these will be given in the description of the gun carriages to which they pertain.

188. Counter Recoil Mechanism.—Counter recoil, or the return of the gun to the firing position after the completion of the recoil, may be effected by gravity, by springs, or by compressed air cylinders, the latter in connection with the recoil brake, forming the hydro-pneumatic recoil system.

The gravity method of effecting counter recoil is very reliable and simple and can always be used when the direction of motion of the recoiling parts is such as to cause a continual rise in their center of gravity as they move to the rear. The gravity method is used in the older type barbette carriages and in all disappearing carriages.

The spring method of effecting counter recoil may be used in all gun carriages on which the gun recoils in the direction of its axis. These include pedestal and naval mounts, new types of barbette carriages, turret mounts and all wheeled carriages.

In the smaller carriages of these types the springs, initially compressed to the desired amount, may be placed between the piston and the rear end of the hydraulic brake cylinder, which is lengthened for that purpose.

Digitized by Google

In some carriages of this type the hydraulic brake cylinder moves with the gun in recoil, the piston being stationary.

In such constructions the springs are usually placed around the hydraulic brake cylinder and are compressed between a flange on that cylinder in front and some fixed part of the carriage in rear.

In larger carriages the springs are arranged in separate cylinders with pistons of their own, two to four of these spring cylinders being required.

These and other arrangements of counter recoil springs will be further discussed in the descriptions of the carriages to which they pertain.

189. Hydro-pneumatic Recoil Systems. Connected Recoil and Counter Recoil Systems.—Compressed air is being used to an

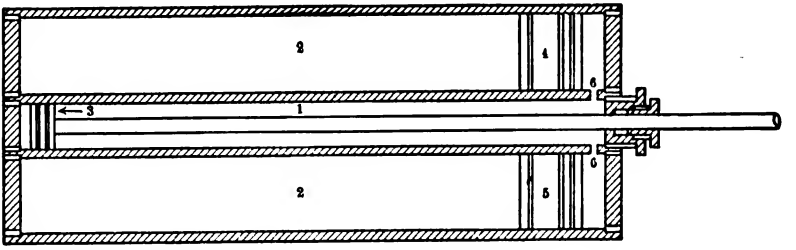

FIG. 133.

increasing extent for effecting counter recoil.. There are two types of hydro-pneumatic counter recoil systems. In the one there is a connection between the hydraulic recoil brake and the compressed air counter recoil cylinders, while in the other the recoil and counter recoil systems are entirely independent of each other.

An example of the former type is shown in Fig. 133, which shows a section through the oil cylinder 1, and the two air cylinders, 2, all these cylinders being formed in the cradle in which the gun recoils.

The piston, 3, is packed so as to fit tightly in the oil cylinder. It is attached to the gun through its rod, which passes through a packed stuffing box at the rear end of the cylinder. The floating pistons, 4 and 5, in the air cylinders are similarly packed. Open-

Digitized by Google

ings, 6, at the rear end of the oil cylinder lead to the air cylinders. With the gun in the firing position, the piston, 3, is at the front end of the oil cylinder. This cylinder and the parts of the air cylinders in the rear of the floating pistons, 4 and 5, are filled with oil, while the main parts of the air cylinders in front are filled with compressed air. When the gun recoils, the piston, 3, moves back, forcing the oil through the orifices, 6, and causing the pistons, 4 and 5, to move forward, thus further compressing the air contained in the air cylinders. When the recoil has been stopped the expansion of the air in these cylinders reverses the motion of all three pistons and returns the gun to the firing position.

As in the hydraulic brake, most of the resistance to recoil comes from the throttling of the oil through the orifices.

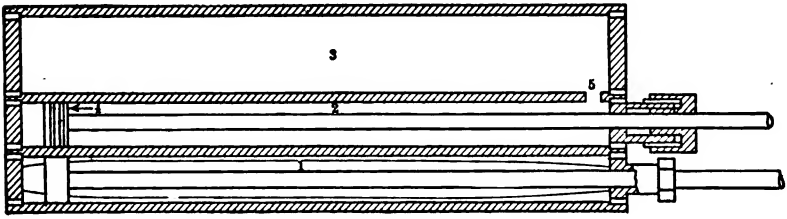

FIG. 134.

A hand pump is provided for maintaining the pressure in the air cylinders. The principal objection to this system is that air leaking past the air pistons and mixing with the oil in the recoil cylinder forms a frothy mass which does not give the same resistance as pure oil, and hence causes irregularities in the pull on the piston rod and in the length of recoil.

190. Independent Recoil and Air Counter Recoil Systems.—An example of the second type of hydro-pneumatic recoil system is shown in Fig. 134. The cylinder, 1, is a hydraulic brake of the usual type. The counter recoil cylinder, 2, fitted with the packed piston, 4, and its rod is filled with oil which also partly fills the cylinder, 3, which forms the air reservoir. The remainder of cylinder, 3, is filled with compressed air.

Digitized by Google

An opening, 5, connects the counter recoil cylinder and the air reservoir, but there is no connection between these and the hydraulic cylinder.

Both pistons are drawn to the right as the gun recoils. The hydraulic brake stops the recoil by throttling the oil in the usual way. At the same time the oil in cylinder, 2, is forced through the large opening, 5, into the air reservoir, 3, further compressing the air contained therein. At the end of recoil the expansion of this air forces the excess of oil back through the opening, 5, against the piston, 4, and runs the gun to the firing position.

The advantages of this system over the one previously described are that leakage of air can have no effect on the hydraulic brake proper and that there are fewer places at which leakage can occur.

As in the other system a hand pump is provided for keeping up the air pressure in the reservoir.

This system would work without oil in the cylinders, 2 and 3, but there would then be much more leakage of air past the piston and through the stuffing box. The leather packing rings used in combination with metal ones in packing these parts insure a much tighter joint if wet with oil than if dry.

Advantages and Disadvantages of Air over Spring Counter-recoil Systems.—The principal advantages of air cylinders over spring cylinders are the reductions in weight and in cost. These advantages are especially important in long recoil heavy field guns or howitzers designed to be fired at high angles of elevation. If springs are used the columns must be long, heavy and expensive, while if the air cylinders are used the additional pressure needed when the guns are fired at high angles of elevation can be obtained by pumping more air into the cylinders.

The principal disadvantage of air cylinders is leakage of air past the pistons or out of the cylinders through the stuffing box. This may cause failure in the running of the gun back to the firing position and delay due to the necessity of using the hand pump.

It is evident that the force, in whatever way obtained, which

Digitized by Google

effects counter recoil also acts during recoil and that it forms a part of the total resistance R to recoil.

191. Resistance of the Counter Recoil Springs or Air Cylinders. The resistance S of a coiled spring varies directly with the compression of the spring.

Representing by G the force required to compress the spring, when free, over the first unit of length, the resistance of the spring at any length of compression x is

$$S = Gx.$$

If the spring has an initial compression so that it exerts a resistance G', the resistance after further compression over a length x becomes

$$S = G' + Gx. \quad . \quad . \quad . \quad . \quad . \quad . \quad . \quad . \quad (18)$$

For the counter recoil springs of a gun carriage, G' represents the residual pressure in the spring when the gun is in battery, and x represents any length of recoil.

The resistance of the spring at any point may therefore be determined from Eq. (18).

Air compressed by a piston in a cylinder acts as a spring and follows the law given by Eq. (18). When an air cylinder is used S becomes the total pressure of the air over the effective area of the air piston.

192. Total Resistance to Recoil.—The total resistance to recoil is composed of the resistance opposed by the brake, the resistance due to friction, the resistance—either plus or minus—due to the inclination of the top of the chassis or the recoil slides and the resistance due to the counter-recoil springs or air cylinders if there are such included in the recoil system.

Let W be the weight of the moving parts;
M the mass of the moving parts;
f the coefficient of friction;
α the angle of inclination of the chassis rails, or of the recoil slides;

Digitized by Google

S the resistance of the springs or air cylinders at any point of recoil;

P the total resistance of the hydraulic brake, or the total hydraulic pressure on the piston at the same point of recoil;

R the total resistance to recoil.

The resistance due to friction will be $fW\cos\alpha$; that due to inclination of the chassis rails or the recoil slides will be $W\sin\alpha$. The total resistance at the point of recoil considered is therefore

$$R=W(\sin\alpha+f\cos\alpha)+S+P. \quad . \quad . \quad . \quad . \quad (19)$$

Resistance of the Hydraulic Brake—Pressure in the Cylinder.—The hydraulic pressure on the piston of the brake cylinder at any point of the recoil may now be determined from Eq. (19).

$$P=R-W(\sin\alpha+f\cos\alpha)-S, \quad . \quad . \quad . \quad . \quad (20)$$

if we substitute for R its constant value from Eq. (15), for S its value at the given point from Eq. (18), and for the remaining term its constant value.

193. Relation between the Pressure, Area of Orifice, and Velocity of Recoil.—In this discussion we will designate by the term *aperture* the cut through the piston, and by the term *orifice* that portion of the aperture open to the flow of the liquid; and we will consider for simplicity that there is but one aperture and one orifice.

Let A be the *effective* area of the piston in square feet, that is, the area of the piston minus the area of the piston rod and aperture. The square foot is taken as the unit of area, because in the velocities involved in the discussion the foot is the unit of length.

Let a be the area of orifice at any point of recoil;

v_r the velocity of retarded recoil at the point considered;

v_l the velocity of the liquid through the orifice at the point considered;

γ the weight of a cubic foot of the liquid;

P the total pressure on the piston at the point considered.

Digitized by Google

The cylinder being full of liquid the volume that passes through the orifice is the volume displaced by the piston. We therefore have at any instant

$$v_r A = v_l a$$

or, for the velocity of flow,

$$v_l = \frac{v_r A}{a}. \quad . \quad . \quad . \quad . \quad . \quad . \quad . \quad . \quad . \quad (21)$$

From Torricelli's law for the flow of liquids through orifices we know that the pressure required to produce this velocity of flow is the pressure due to a column of liquid whose height h is given by the equation

$$v^2 = 2gh. \quad . \quad . \quad . \quad . \quad . \quad . \quad . \quad . \quad . \quad (22)$$

Substituting for v the value of v_l from Eq. (21) and solving for h we obtain

$$h = \frac{v_r^2 A^2}{2ga^2}. \quad . \quad . \quad . \quad . \quad . \quad . \quad . \quad . \quad (23)$$

The weight of a cubic foot of the liquid being γ, the weight of the column whose area of cross-section is unity will be γh, and the weight of the column whose area of section is equal to that of the piston will be $A\gamma h$. $A\gamma h$ is therefore the total pressure on the piston, and substituting in this expression the value of h from Eq. (23) we have, for the total pressure on the piston, for any velocity v_r

$$P = \frac{\gamma A^3 v_r^2}{2ga^2}. \quad . \quad . \quad . \quad . \quad . \quad . \quad . \quad . \quad (24)$$

This equation is general and expresses the relation that exists between P, A, and a for any given velocity of recoil.

Solving for a^2 we obtain

$$a^2 = \frac{\gamma A^3 v_r^2}{2gP}. \quad . \quad . \quad . \quad . \quad . \quad . \quad . \quad . \quad (25)$$

194. Area of Orifice.—With the relations established in Eqs. (18), (20), and (25), which are here repeated, and the curve v_{rx} in

Digitized by Google

Fig. 130, we are now prepared to determine the variable area of orifice in the piston.

$$S = G' + Gx. \quad . \quad . \quad . \quad . \quad . \quad . \quad . \quad . \quad . \quad . \quad (18)$$

$$P = R - W(\sin \alpha + f \cos \alpha) - S. \quad . \quad . \quad . \quad . \quad (20)$$

$$a^2 = \frac{\gamma A^3 v_r^2}{2gP}. \quad . \quad . \quad . \quad . \quad . \quad . \quad . \quad . \quad . \quad . \quad (25)$$

The dimensions of the recoil cylinder will be fixed within narrow limits by the design of the carriage, and by the requirement that the pressure per unit of area must not be so great as to render difficult the effective packing of the stuffing boxes through which the piston rod passes. We will therefore assume that the diameters of the cylinder and piston rod are given, and as the relation between the total area of piston and the effective area may be readily established we will assume that the effective area A of the piston is known.

Brake with Variable Hydraulic Pressure.—The value of P at any point in the cylinder, for which the length of recoil is x, is obtained from Eq. (20), the proper value of S for the point having been first determined from (18). The value of v_r is taken from the curve v_{rx} in Fig. 130 at the ordinate whose abscissa is x. The values of P and v_r thus determined are substituted in Eq. (25). The resulting value of a is the area of orifice at the given point.

Constant Hydraulic Pressure.—If P in Eqs. (24) and (25) is constant we will have in a given cylinder, for any values of v_r and a, as V_{r_r} and a respectively, the velocity of recoil and the area of orifice when the powder gases cease to act.

$$a_0^2 = \frac{\gamma A^3 V^2_{r_r}}{2gP}, \quad . \quad . \quad . \quad . \quad . \quad . \quad . \quad (26)$$

and by combining Eqs. (25) and (26) we obtain for any given cylinder

$$\frac{a}{a_0} = \frac{v_r}{V_{r_r}}, \quad . \quad . \quad . \quad . \quad . \quad . \quad . \quad . \quad (27)$$

Digitized by Google

from which we see to maintain a constant hydraulic pressure in the cylinder, the area of the orifice must vary directly with the velocity of recoil.

Substituting in Eq. (27) the value of v_r/V_{r_r} obtained by combining Eqs. (14) and (16) we obtain,

$$a = a_0\sqrt{\frac{L-x}{L-E_{r_r}}}, \quad \ldots\ldots\ldots \quad (28)$$

that is, with constant pressure in the cylinder, the area of orifice varies as the ordinates of a parabola.

Eq. (28) refers only to that part of the recoil after the powder gases cease to act.

195. Brake with Constant Pressure.—When there are no springs or other variable resistance in the recoil system, S becomes o in the value of P, Eq. (20) and a constant pressure will be required in the brake.

To determine the area of orifice we have, for this case,

$$P = R - W(\sin\alpha + f\cos\alpha)$$

$$a_0^2 = \frac{\gamma A^3 V^2_{r_r}}{2gP}. \quad \ldots\ldots\ldots \quad (26)$$

$$\frac{a}{a_0} = \frac{v_r}{V_{r_r}} \quad \ldots\ldots\ldots \quad (27)$$

Find the value of P from the first equation in the manner already explained. V_r and A are known and a_0 may be now determined from Eq. (26). The area of orifice at any other points may now be obtained by means of Eq. (27), using the values of v_r taken from the curve v_{rz}. The areas from the point E_{r_r} to the end may also be obtained from (28).

Horizontal Chassis.—If the chassis rails are horizontal and the top carriage is mounted on rollers, so that we may neglect the friction, the term $W(\sin\alpha + f\cos\alpha)$ in the value of P, Eq. (20),

Digitized by Google

also becomes zero, and P reduces to R. Substituting for R in Eq. (14) the value of P from (26) and solving for a_0 we obtain

$$a_0^2 = \frac{\gamma A^3}{W}(L - E_{r_r}), \quad \ldots \ldots \quad (29)$$

a_0 is in this case independent of the velocity of recoil, and is dependent only on the remaining length of recoil after the powder gases cease to act. Therefore for a given area of orifice at E_{r_r} the remaining length of recoil will be the same no matter what the initial velocity of the projectile, the charge of powder, or the angle of fire may be.

Under these conditions the brake requires no adjustment for varying conditions of fire, and in this respect it possesses further advantage over the brake with constant orifices and variable pressure.

The explanation of the independence, under the given conditions of the remaining length of recoil and the velocity, will appear if we substitute P for R in Eq. (14). We obtain

$$(L - E_{r_r}) = \frac{MV^2_{r_r}}{2P}. \quad \ldots \ldots \quad (30)$$

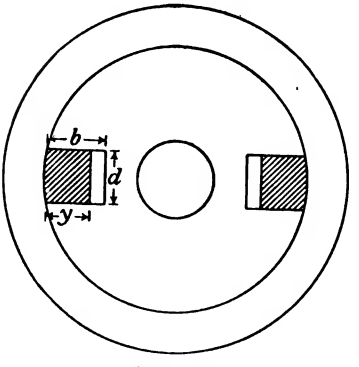

FIG. 135.

In Eq. (26) we see that for a given value of a_0 the pressure P must vary directly as V^2 varies. Therefore in (30), P varying with $V^2_{r_r}$, $(L - E_{r_r})$ will remain constant.

196. Profile of the Throttling Bar.—Suppose there are n similar apertures cut in the piston. The area of each orifice at any point in the cylinder will then be a/n, a being determined for the particular point from Eq. (25). Let b, Fig. 135, be the width and d the depth of each aperture. The throttling bar has the same depth, and a variable width y.

Digitized by Google

Then for the area of each orifice at the given point in the cylinder we have

$$\frac{a}{n}=d(b-y).$$

For the brake with constant pressure the profile of the throttling bar from the point where the powder gases cease to act to the end will be a parabola. Its equation, obtained by substituting the value of a from the above equation in Eq. (18) and reducing, is

$$y=b-\frac{a_0}{nd}\sqrt{\frac{L-x}{L-E_{r_r}}}. \quad . \quad . \quad . \quad . \quad . \quad . \quad . \quad (31)$$

Neglected Resistances.—In the foregoing discussion we have neglected the resistance due to the friction of the liquid and the contraction of the liquid vein. It has been found by experiment that the error due to the neglect of these resistances may be corrected by assigning to v_l, the velocity of the flow through the orifices, Eq. (21), a value greater than the actual value as expressed in Eq. (22). The value to be substituted is determined by experiment for each class of carriage and takes the form $v_l=av_l+b$, a and b being constants. The result of the substitution is an increase in the area of orifice for any given pressure in the cylinder, see Eq. (25).

Counter-recoil Buffer.—This is provided for reducing the shock to the carriage as the gun is run to the firing position by the counter-recoil mechanism. It may consist of a dash pot formed at the end of the hydraulic cylinder, or of a rod acting inside the hollow piston rod of the recoil cylinder, or it may be a separate hydraulic cylinder of which the piston acts only at the last moments of counter recoil. Several types will be described in the descriptions of the carriages to which they pertain.

The use of the counter-recoil buffer increases the stability of mobile artillery carriages by preventing their forward motion as the gun runs into the firing position.

Digitized by Google

PROBLEMS

1. The 3-in. field gun referred to in Problems 1 to 3, Art. 186, is fired horizontally. The resistance of the counter-recoil springs at the time the powder gases cease to act is 800 lbs. The coefficient of friction on the recoil slides is 0.1. The oil in the recoil cylinder weighs 50 lbs. per cu. ft. The effective area of cross-section of the hydraulic cylinder is 3.32 sq. ins.

Determine the area of orifice at the time the powder gases cease to act under the assumption that the total resistance to recoil is constant, and the total length of recoil is 45 ins.

2. From the data obtained in preceding problems plot the curve showing area of orifice as a function of distance recoiled.

197. Variable Recoil.—Modern field guns and howitzers are mounted so as to have a long recoil on their carriages when fired horizontally. The reason for this will appear later.

When these guns are fired at a high angle of elevation it is necessary to reduce the length of recoil to prevent the breech of the gun from striking the ground. This reduction is effected by a mechanism which automatically reduces the size of the orifices in the hydraulic brake as the gun is elevated.

One form of such a mechanism will be described in the description of the 6-in. howitzer carriage.

Differential Recoil.—If no counter-recoil buffer is provided, the velocity of the gun to the firing position under the action of the counter-recoil springs or air cylinders is a maximum just as it reaches that position. If an arrangement is made to automatically fire the gun when it has this maximum forward velocity, it is evident that the maximum velocity of free recoil will be reduced by the amount of the forward velocity, and hence from Eq. (15), either the total resistance R, or the corresponding length of recoil L, or both, can be materially reduced.

Systems based upon this principle have been used abroad for small guns, such as mountain guns. The gun is caught by a pawl in the extreme recoiled position and is loaded in that position. When it is desired to fire, the pawl is tripped, the gun runs forward and is automatically fired as it reaches the firing position.

Digitized by Google

The principal objections to this system, known as the differential-recoil system, are the unsteadiness of the gun at the moment of firing and the possibility of the gun being turned over in a forward direction by the shock of counter recoil if a missfire should occur.

198. Length of Recoil in Artillery of Position.—In artillery of position the gun carriage is rigidly bolted to a fixed platform. Its mechanism is such as to allow the gun and the attached parts to recoil on firing. The hydraulic brake cylinder and its piston are attached respectively to the moving and fixed parts of the carriage or vice versa, in such a way as to cause the piston to be drawn through the cylinder as the gun recoils.

When constant total resistance is to be exerted by the recoil system, which for reasons given is always the case in artillery of position, either the total resistance or the length of recoil may be assumed and the other determined from Eq. (15). While the assumption of a very long recoil would reduce the resistance and consequently the strain on the carriage and permit its parts to be made lighter, the necessary increase in the length of the recoil slides might overbalance the saving and add to the cost of the carriage.

In those carriages such as mortar carriages, anti-aircraft gun carriages and the latest type barbette carriages, which permit the firing of the gun at high angles of elevation, a very long recoil cannot be used because the distance from the breech of the gun to the supporting platform will not permit it. Furthermore the use of a long recoil would necessitate the use of long and heavy columns of counter-recoil springs. Lack of space also prevents the use of a long recoil on turret mounts.

In disappearing carriages the length of the recoil is determined more by the necessity of giving the gun the proper movement in recoil than by limitation of the strains brought upon the carriage.

With the exception of the disappearing and the older type barbette carriages the recoil for artillery of position is comparatively short. The following table gives the length of recoil in inches

Digitized by Google

measured along the recoil cylinder for some gun carriages of this type:

15 pdr. Model 1903, 9 ins.
6″ Pedestal Mount, 15 ins.
8″ Barbette (old type), 40 ins.
12″ Barbette (old type), 48 ins.
12″ Barbette (new type), 30 ins.
12″ Mortar, Model 1896, 24 ins.
12″ Mortar, Model 1908, 24 ins.

199. Horizontal Recoil System on Seacoast Carriages.—The arrangement of the parts of the recoil system on most of our seacoast disappearing carriages, and on older type barbette carriages for guns 8 ins. or more in caliber, is shown in Fig. 136.

The two cylinders *c* are integral parts of the top carriage, the top carriage, including the cylinders, forming a single steel casting in the sides of which above the cylinders are trunnion seats, for the gun trunnions in a barbette carriage, and for the gun lever trunnions in a disappearing carriage.

The piston rods of the recoil cylinders are fixed to the chassis in front and supported in the rear. They enter the cylinders through stuffing boxes. On discharge of the piece the top carriage and recoil cylinders move to the rear with the gun, forcing the liquid in the cylinders through the orifices in the stationary pistons.

The direction of the movement of the cylinders is up in Fig. 136.

To equalize the pressure in the two cylinders their interiors are connected at the front by the pipe *a* and at the rear by the two pipes *d* and *f*. Each half of the pipes *d* and *f* has unobstructed communication with the other half of the same pipe through a valve box *v*. A cross pipe *b* connects the pipe *a* with the valve box. A path is afforded through the pipes, *a*, *b*, and *d* and *f* for the flow of liquid from one side of the piston to the other, which path, as well as the orifices in the pistons, must be considered in determining the area of orifice.

The area of orifice, and consequently the length of recoil, is

Digitized by Google

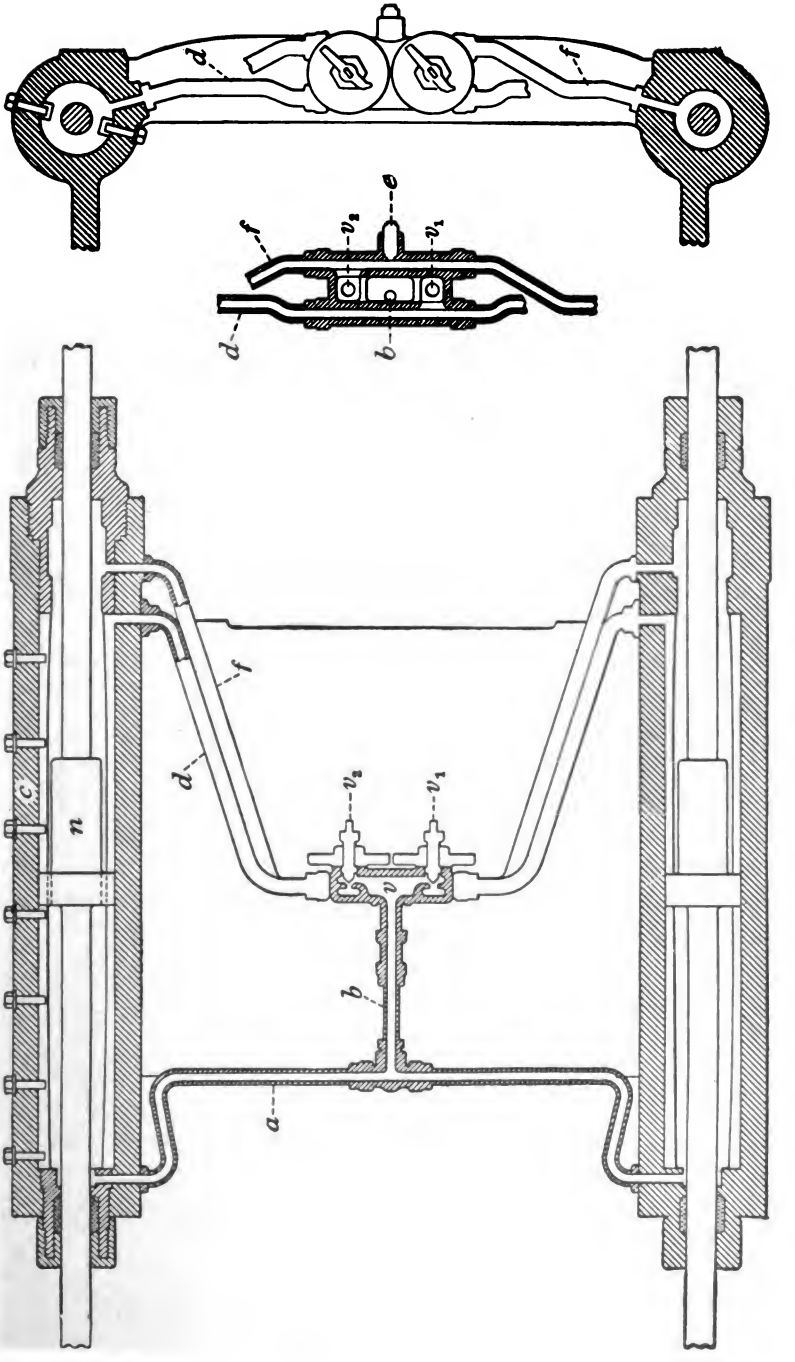

FIG. 136.—Recoil System, Seacoast Carriages.

Digitized by Google

calculated for standard conditions of loading. Any variation in these conditions will vary the length of recoil, and thus, in disappearing carriages, vary the height of the breech of the gun above the loading platform. Standard conditions of loading do not always exist, and the resistance in the cylinders will vary with the viscosity of the oil which itself varies with the temperature. It is, therefore, desirable to have means for varying the resistance in the cylinders in order that the prescribed length of recoil may be obtained under any conditions, as, for instance, when reduced charges are being used or when the gun is fired on a very hot or a very cold day.

For the purpose of varying the area of orifice, and, therefore, the resistance in the cylinders, adjustable valves called throttling valves are provided at v_1 and v_2. The flow from the pipe b into the pipe d communicating with the body of the cylinder is regulated by the valve v_1, and the area open to the flow is affected to increase or diminish the pressure in the cylinder as desired. The pipe d and its valve v_1 are for the control of the recoil.

To control the counter recoil and to bring the gun and top carriage to rest without shock as they come into battery under the action of gravity, the counter-recoil buffer is provided. The rear cylinder head is provided with a cylindrical recess into which the enlargement n of the piston rod, just in rear of the piston, enters as the carriage approaches its position of rest in battery. The lug n is slightly conical, so that the escape of the liquid from the recess is gradually obstructed. The pipe f with its valve v_2 assists in the regulation of this part of the counter recoil.

The valves v_1 and v_2 are moved to increase or diminish the area of orifice by means of the handles seen in the rear view, at the top of Fig. 136.

The total effective area of valve orifice in recoil is the sum of the openings of v_1 and v_2. In counter recoil the effective area of valve orifice is that of v_2 only. An adjustment of v_2 will effect both recoil and counter recoil, while an adjustment of v_1 will effect recoil only. In practice v_2 should be first adjusted to give a sat-

Digitized by Google

isfactory counter recoil and then v_1 should be adjusted to give a satisfactory recoil. If recoil be first adjusted, it will be disturbed by the adjustment for counter recoil.

Each cylinder has a filling hole on top near its front (lower) end. The portion of the cylinders above the level of the filling holes is left empty to allow space into which the oil may expand when heated by the weather or by the friction developed in firing. This space also serves to prevent an excessively high pressure during the first part of recoil. The sudden withdrawal of the plunger of the counter-recoil buffer on firing, in connection with the small clearance around the plunger, which prevents the ready flow of oil into the space vacated by it, would otherwise cause a high pressure on account of the incompressibility of the oil.

The cylinders are filled with a mineral oil called hydroline. The freezing-point of the oil is below 0° F. Its specific gravity is about 0.85. The oil may be drawn off through a hole *e* in the valve box, ordinarily stopped with a screw plug.

The throttling bars are fastened to the cylinders by screw bolts through the cylinder walls, as shown in Fig. 136.

200. Recoil System of the 6-inch Disappearing Carriages, Models of 1905 MI and 1905 MII, and of the 14-inch Disappearing Carriage, Model 1907 and 1907 MI.—It has been found desirable to separate the recoil and counter-recoil systems of disappearing carriages so as to have independent control of each. The system adopted in the above carriages has other advantages in addition to the independent control. This will appear in their description in the next chapter.

Recoil on these carriages is controlled by a single hydraulic brake cylinder, Fig. 137, placed in the counterweight. The cylinder moves with the counterweight and the piston is fixed at both ends. Its lower end is fastened to the piston rod beam. The latter takes up the total longitudinal pull on the rod when the gun is fired. The upper end of the rod is supported by a bracket.

In the later models of the above carriages the area of the orifice is varied by means of throttling bars as previously described. In

Digitized by Google

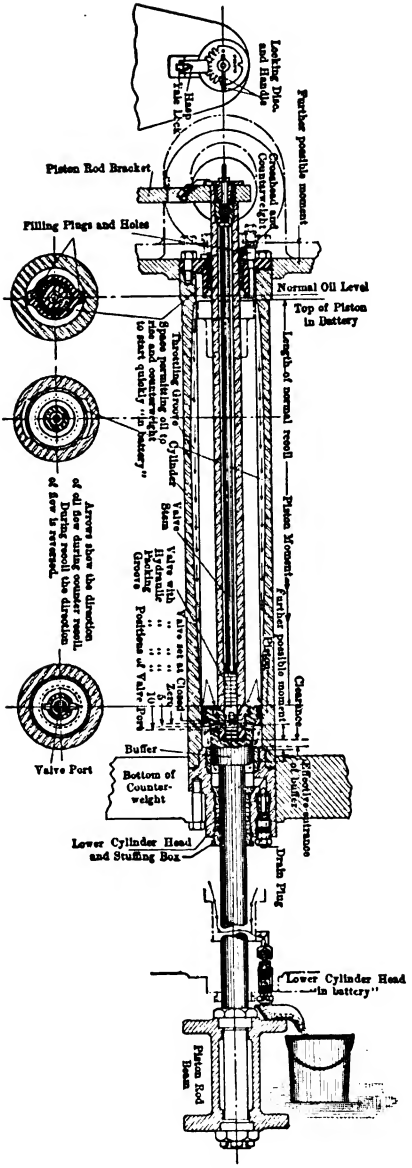

FIG. 137.

the earlier models, throttling grooves were cut in the walls of the cylinder as illustrated in Fig. 137.

A recess is provided in the lower cylinder head into which a corresponding enlargement on the piston enters, with slight clearance. In case of abnormal recoil, these parts act as a dash-pot and prevent injury to the carriage. They take the place of the balata buffers on the rear of the chassis of carriages having horizontal cylinders.

Two filling plugs are provided in the upper cylinder head. Copper tubes extend down inside the cylinder from the filling holes to prevent filling above a certain point. This leaves an air space in the upper end of the cylinder which serves the same purposes as in the case of the horizontal cylinders.

A drain plug is provided in the lower cylinder head. It is so arranged that the oil can be withdrawn without unscrewing the plug more than a few turns.

A valve is provided in the piston rod to furnish means for

Digitized by Google

adjusting the recoil. The upper end of the rod is bored axillary to receive the stem and body of the valve. At the piston two grooves are turned in the surface of the bore. Six holes are bored radially so as to connect the upper groove with the space above the piston and corresponding holes are bored connecting the lower groove with the space below the piston. These holes act as by-passes permitting oil to pass from one side of the piston to the other. The passage of the oil is controlled by the valve body. This consists of a bronze bar fitting the bore with very slight clearance. It has a diametral slot as shown in the figure. With the recoil valve open this slot reaches from one groove to the other. As the valve body is drawn upward, the portion of the slot open to the lower groove decreases to zero and closes the passage between the grooves.

The upper end of the valve stem is threaded and engages in a nut on the upper end of the piston rod so that longitudinal motion of the valve body is secured by rotating the stem. A notched locking disk is provided which fits the squared end of the valve stem. A hasp hinged to the piston rod bracket fits into the notches on the disk. The notches are numbered and other conditions remaining the same the recoil will vary with the setting of the valve.

201. Determination of the Length of Recoil of Guns Mounted on Wheeled Carriages.—The construction of all modern wheeled carriages is such as to allow the gun to recoil in the direction of its axis. The resistance to recoil developed by the recoil system pulls forward on the gun and backward on the carriage, tending to move the latter to the rear. Actual motion of the carriage to the rear is prevented by a spade sunk in the ground at the end of the trail of the carriage and so constructed as to present a broad surface to the ground in rear. Under ordinary conditions the ground will resist a pressure of 80 lbs. per sq. in. of spade surface, and knowing the pressure developed by the pull on the piston rod, which is the only force acting on the carriage, the size of spade can be determined.

Another effect produced by the resistance to recoil is a tendency to rotate the carriage around the point of support of the trail, or to

Digitized by Google

cause the wheels to jump from the ground. Such a movement is very undesirable, as it interferes with rapid aiming and firing of the piece. To prevent this rotation or jump the moment of the weight of the gun and carriage taken with respect to the point of support of the trail must be greater than the moment of the resistance to recoil taken with respect to the same point. This is the principal consideration which determines the total resistance of the recoil systems used in wheeled carriages.

202. Limiting Value of Total Resistance to Recoil in Wheeled Carriages.—In order to determine the limiting value of the total resistance to recoil in a wheeled carriage, assume the gun in a

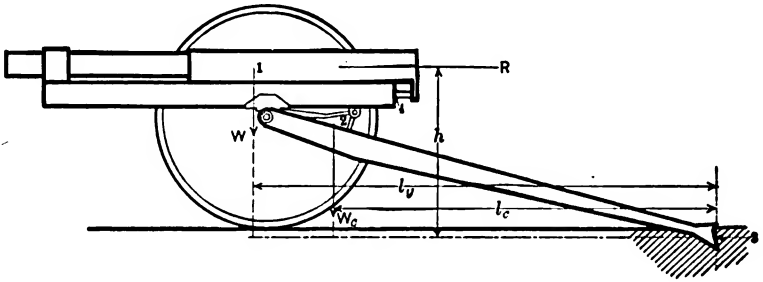

FIG. 138.

horizontal position and on level ground, as shown diagrammatically in Fig. 138.

Let W be the weight of the recoiling parts acting at their center of gravity, 1;

W_c the weight of the fixed parts of the carriage acting at their center of gravity 2;

R the total resistance to recoil;

l_w the lever arm, when the gun is in the firing position, of the weight W, with respect to the center of pressure of the trail spade assumed some distance under the ground at 3;

l_c the lever arm of the weight W_c with respect to the same point;

Digitized by Google

h the height of the center of gravity of the gun above the same point;

x the distance recoiled at any time.

The force R actually acts on the carriage along the line of the piston rod 4. Since, however, the gun is constrained by the cradle to move straight to the rear, without rotation, the moment of this force with respect to the point of support of the trail is the same as that of an equal and parallel force passing through the center of gravity of the gun as represented at R.

The value of R that will just fail to cause the wheels to rise from the ground when the gun is in the firing position is obtained by equating moments, or representing this value of R by R_m, we have,

$$R_m h = W l_0 + W_c l_c,$$

or,

$$R_m = \frac{W l_0 + W_c l_c}{h} \quad . \quad . \quad . \quad . \quad . \quad . \quad . \quad (32)$$

When the gun has recoiled a distance x, the lever arm of W becomes $l_0 - x$, and we have,

$$R_m = \frac{W(l_0 - x) + W_c l_c}{h}, \quad . \quad . \quad . \quad . \quad . \quad (33)$$

evidently a smaller value than that given by Eq. (32), showing that a value of R small enough to prevent jump of the wheels in the early part of the recoil might still cause jump toward the end of the recoil as the moment of the weight of the recoiling parts becomes less.

In Fig. 139 the line $R_m R_m$ shows the maximum permissible values of R obtained from Eq. (33) and plotted as a function of the length of recoil for a gun like that shown in Fig. 138.

If we assume a constant value of R represented by R_c we can calculate the corresponding length of recoil L_c by Eq. (15). In this case, if there is to be no jump, the rectangle OR_c must be entirely underneath the line $R_m R_m$.

Digitized by Google

It is evident that safety against jump can be maintained and the necessary length of recoil shortened if instead of assuming a constant total resistance we assume it as decreasing at such a rate as to remain parallel to the line $R_m R_m$ as represented by the line $R_d R_d$. This method is followed in the designs of most long recoil field guns and howitzers.

The ratio $\frac{R_m}{R_d}$ is the factor of safety against jump, or the factor of stability.

If the length of recoil is such as to provide a factor of stability

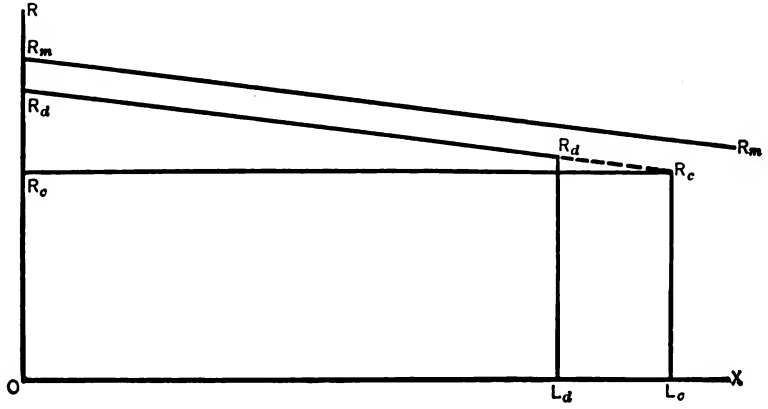

FIG. 139.

when the gun is fired at the horizontal the carriage will be stable at all higher elevations, as the lever arm of R decreases as the gun is elevated. For this reason reduction of the length of recoil with increase of elevation in howitzer carriages, already referred to, does not affect their stability.

PROBLEMS

1. The 3-in. field gun with its recoiling parts weighs 950 lbs. Its center of gravity, with the gun horizontal and on level ground, is 40.5 ins. above and 115 ins. forward of the point of support of the spade. The carriage weighs 1610 lbs. and its center of gravity is 98 ins. forward of the same point.

Digitized by Google

What are the maximum values the resistance to recoil can have, without causing jump of the wheels, both when the gun is in the firing position and when it has recoiled 45 ins.?

2. The 6-in. howitzer with its recoiling parts weighs 2150 lbs. Its center of gravity when horizontal and in the firing position is 43 ins. above and 157 ins. forward of the point of support of the spade. The weight of the non-recoiling parts of the carriage is 5115 lbs., and the center of gravity is 112 ins. forward of the point of support of the spade.

Determine the maximum value the resistance to recoil can have to insure stability of the carriage when firing horizontally, both when the gun is in battery and when it has recoiled 63 ins.

203. Initial Strength of Counter Recoil Springs or Air Cylinders.—The initial strength of the counter recoil spring columns or air cylinders is the force which they exert against the gun in the firing position. This force must be great enough to hold the gun in that position at the highest angle of elevation at which it is to be used as well as to overcome the friction on the recoil slides as the gun runs forward to the firing position.

Let W be the weight of the gun and recoiling parts;
ϕ the angle of elevation;
f the coefficient of friction;
G' the initial strength of the counter recoil springs or air cylinders.

The weight to be lifted is $W \sin \phi$.

The friction to be overcome is $fW \cos \phi$.

We therefore have,

$$G' = W \sin \phi + fW \cos \phi. \quad . \quad . \quad . \quad . \quad . \quad (34)$$

The coefficient of friction f is usually taken as .25 when the gun runs on plain slides and 0.1 when rollers are provided.

Knowing the initial strength of the springs and the required movement, springs may be designed to comply with these conditions.*

If air cylinders are used the pressure G' is the total air pressure

* For the theory of the design of springs see Ruggles' "Stresses in Wire Wrapped Guns and in Gun Carriages," Chapter VI.

Digitized by Google

over the effective area of the air piston. The volume of the air reservoir is made large enough so that when reduced by the stroke of the piston in recoil, the pressure at the end of recoil will not be more than about twice the initial pressure. The pressure per square inch in air cylinders is made as low as practicable, to prevent undue leakage

PROBLEMS

1. Determine the required initial strength of the counter recoil springs of the 3-in. field gun referred to in Problem 1, Art. 202, under the assumption that the gun is to be at 20 degrees elevation. Take coefficient of friction .25.

2. Determine the required initial strength of counter recoil springs in the 6-in. howitzer referred to in Problem 2, Art. 202, to permit firing at 40 degrees elevation. Coefficient of friction .25.

204. Three-inch Field Carriage Recoil System.—A longitudinal section through the gun recoil system of the 3-in. field carriage

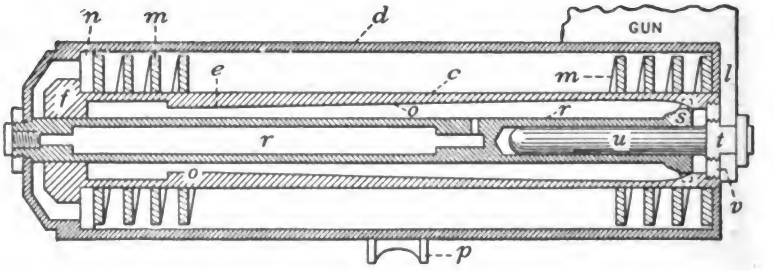

FIG. 140.

is shown in Fig. 140, drawn to a distorted scale in order to show the parts more clearly.

A cylindrical cradle *d*, of cross-section as shown in Fig. 141, is pintled by the pintle *p* in a part of the carriage called the rocker, not shown. The grooves *a* of the pintle are engaged by clips provided on the rocker. The rocker embraces the axle of the carriage and has a movement in elevation which is transmitted to the gun by the cradle.

The gun is provided with clips *k* which engage the upper flanges of the cradle; and when fired, the gun slides to the rear on the upper

Digitized by Google

surface of the cradle. The lug *l*, Fig. 140, is an integral part of the gun. The counter recoil buffer *u* is attached to the lug by a bolt *t*, and the recoil cylinder *c* is attached to the same bolt by means of the screw *v*. Integral with the walls of the cylinder are three throttling bars *o*. The piston head *s* is provided with three corresponding apertures, Fig. 141.

The hollow piston rod *r* is held to the front end of the cradle by a nut screwed on the forward end of the rod. The rod terminates at its rear end in the piston head *s*. The outer shoulder formed on the front head *f* of the recoil cylinder receives the thrust of the counter recoil springs *m* transmitted through the annular spring support *n*, which also serves to center the cylinder in recoil. The flat coiled springs *m* extend continuously from the front end to the rear end of the recoil cylinder.

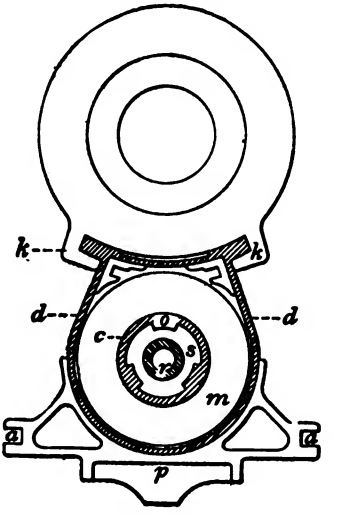

FIG. 141.

The gun in recoiling draws with it, by means of the lug *l*, the recoil cylinder *c*, filled with oil, and the counter recoil buffer *u*. The piston, attached to the cradle, does not move. When the forward end *e* of the curve of the throttling bar reaches the piston head *s*, the apertures in the piston are completely closed against the flow of the liquid, and recoil ceases. The counter recoil buffer *u* has now been drawn all the way out of the piston rod.

Under the action of the springs *m*, which have been compressed by the recoil, the gun returns to battery. The first part of the counter recoil, during which the counter recoil buffer is out of the hollow piston rod, is unobstructed. When the buffer enters the piston rod the escape of oil from inside the rod is permitted only through the narrow clearance between the rod and the buffer.

Digitized by Google

The resistance thus offered gradually diminishes the velocity of counter recoil and brings the gun to rest without shock as it comes into battery. The buffer is cylindrical for the greater part of its length, with a clearance in the piston rod of 0.025 of an inch on the diameter. The diameter of the buffer gradually enlarges over a length of three inches at the rear until the clearance is but 1/1000 of an inch on the diameter.

The pressure on the piston due to the recoil is transmitted through the cradle to the pintle *p* and thence to the carriage.

The length of recoil is 45 inches.

Reference will be made to other recoil systems in the descriptions of the carriages to which they pertain.

Digitized by Google

CHAPTER VIII

ARTILLERY

205. Classification.—Artillery is divided into two general classes:

Artillery of position and mobile artillery.

Artillery of position is that which is permanently mounted in fortifications.

Mobile artillery is that which is designed to accompany or follow an army in the field.

Artillery of Position.—As in our service all the permanent fortifications are located on the seacoast, our artillery of position is known as seacoast artillery.

Seacoast Guns.—Comprised in the seacoast artillery are guns ranging in caliber from 2.24 ins. to 16 ins., their projectiles ranging in weight from 6 lbs. to 2400. The 2.24-in. and 3-in. guns, called the 6-pounder and the 15-pounder, are used for the defense of the sea fronts of fortifications against landing parties and for the defense of the submarine mine fields. The guns of medium caliber, from 4 to 6 ins., are best used for the protection of places subject to naval raids, and for the defense of mine fields at distant ranges. Their fire is effective against unarmored or thinly armored ships.

The 8- and 10-in. guns are effective against armored cruisers and against the thinly armored parts of battleships.

The proper target for guns 12 ins. or more in caliber is the heavy water line armor of the enemy's battleship.

Seacoast Mortars.—The thick armored sides of ships of war protect the ships to a greater or less extent against the direct fire from high-powered guns. The great weight of armor that would be required for complete deck protection is prohibitive. The decks of war ships are, therefore, thin, and offer an attractive target.

Digitized by Google

As the elevation above sea level of the sites of the guns in most fortifications is not sufficient to permit direct fire against the decks, there are provided for use against this target the 12-in. seacoast mortars, short guns so mounted that they can be fired at high angles. The heavy projectiles fired from these guns carry large bursting charges of high explosive. Descending almost vertically on the deck of a ship they easily overcome the resistance offered, and penetrating to the interior of the ship burst there with enormous destructive effect.

Most mortar carriages permit firing only at angles of elevation between 45° and 65°. With a fixed charge of powder and weight of projectile, a limited range only would be covered by fire between these angles. Charges of several different weights, and at least two weights of projectiles are, therefore, used in the mortars. With each charge a certain zone in range may be covered by the fire, and the charges are so fixed that the range zones overlap. Any point within the limits of range may thus be reached by the projectile. The least range with the smallest charge provided is about a mile and a half. Mortar batteries are therefore usually erected at not less than this distance from the channels or anchorages that are under their protection.

The table on page 355 contains data relating to seacoast guns and mortars.

The construction of built-up and wire seacoast guns and mortars was described in Chapter VI. Guns up to 4.7 ins. caliber use fixed ammunition. Those of larger caliber use separate loading ammunition.

The older model large caliber guns were 35 calibers in length. The latest model 16-in. gun is 50 calibers in length.

The length of a gun in calibers is the distance from the front face of the breech block to the muzzle, divided by the diameter of the bore.

206. Method of Mounting.—Seacoast guns are mounted in fixed emplacements to which the carriages are rigidly bolted. Concrete and sand or earth parapets protect the carriages on the side toward the water. Rooms for use as magazines, handling

Digitized by Google

TABLE OF DATA RELATING TO SEACOAST GUNS AND MORTARS

Gun.	Model.	Charge, lbs.	Projectile, lbs.	Bursting Charge lbs.	Muzzle Velocity f. s.	Maximum Pressure, lbs.	For Maximum Range.			
							Elevation, deg.	Range Yards.	Time of Flight secs.	Remaining Velocity f. s.
2.24-in	1900	1.35	6	0.26	2400	34,460	12	6,241	18.35	726
3-in...	1903	5.5	15	0.35	2600	32,000	15	8,771	24.49	793
4.72-in	Armstrong	11.0	45	1.96	2600	34,000	20	11,211	28.50	840
5-in...	1900	22.5	59	2.40	2600	36,000	15	10,431	26.75	874
6-in...	1908	29.75	108	4.67	2600	38,000	15	14,500	31.17	1050
8-in...	1888	80.00	323	16.86	2200	38,000	18	16,300	35.28	1141
10-in...	1900	182.00	617	33.20	2250	32,000	15	16,290	31.56	1244
12-in...	1900	334.00	1070	58.52	2250	30,000	15	17,342	32.22	1320
14-in...	1909	430.00	1660	85.00	2350	38,000	20	22,780	39.88	1345
16-in...	1895	650.00	2400	126.55	2250	38,000	20	†27,365		
Mortar.										
12-in...	1912	90.0	700	24.16	1800	37,000	45	19,319		
12-in...	1908	58*	824*	32.68	1300*	37,000	45	12,019	51.00	957

* Zone 8. The bursting charges given in this table are for high-explosive shell.
† Estimated.

rooms and quarters for personnel are formed between the concrete emplacements in positions well protected by the parapet. Electric light is furnished for these rooms. Electric power is available and is furnished in addition to hand power for traversing and elevating the larger guns, handling projectiles, retracting disappearing guns, etc.

There are two principal classes of seacoast gun carriages—disappearing carriages and barbette carriages. Barbette carriages include all those in which the gun habitually projects over the top of the parapet. Except for the protection given by the shield the gun and the upper part of the carriage are exposed to fire.

Disappearing carriages are those in which the recoil of the gun operating through the mechanism of the carriage withdraws the gun to a position behind and underneath the level of the top of the parapet.

Seacoast gun carriages differ in details for guns of different caliber, and there are, in some cases, several different models of

Digitized by Google

carriages of both the barbette and disappearing type for the same caliber gun.

A description of one mount of each distinct type will follow and will serve to show the principles that govern in similar constructions.

General Characteristics.—In general, the mount consists of a fixed base bolted to the concrete platform of the emplacement, and of a gun-supporting superstructure resting on the base and capable of revolution about some part of it. The superstructure supports, in addition to the gun, all the recoil controlling parts and the necessary mechanisms for elevating, traversing, and retracting the gun.

Fastened to the fixed base or to the platform around the base is an azimuth circle graduated to half degrees, and on the movable part of the carriage is fixed a pointer, with vernier reading to hundredths of a degree, that indicates the azimuth angle made by the gun with a meridian plane through its center of motion.

The gun, supported by means of its trunnions on the superstructure of the carriage or contained in a cradle which is itself so supported, has movement in elevation about the axis of the trunnions. The elevating mechanisms, or the sights, are provided with graduated scales which usually indicate the range corresponding to each position of the gun.

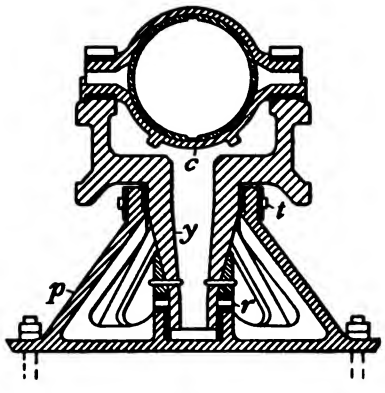

FIG. 142.

Protecting guards are provided wherever necessary for the protection of the gunners against accident, or for the protection of the mechanisms of the carriage against the entrance of dust or water.

207. Pedestal Mounts.—Seacoast guns up to six inches in caliber are mounted in barbette on carriages similar in construction to the carriage shown in Figs. 142 and 143.

Digitized by Google

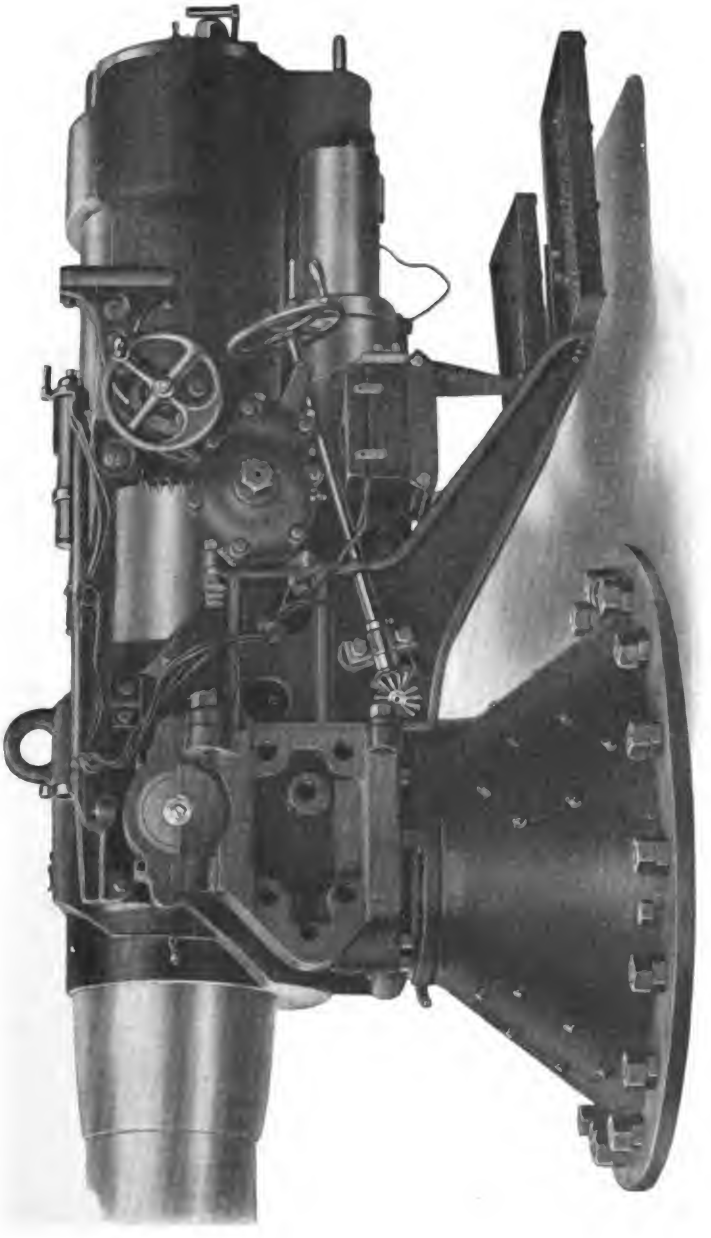

FIG. 143.—Pedestal Mount for 6-inch Gun, Shield Removed.

Digitized by Google

A conical pedestal of cast steel, *p*, Fig. 142, is bolted to the concrete platform. A pivot yoke *y*, free to revolve, is seated in the pedestal. In the upwardly extending arms of the pivot yoke are seats for the trunnions of the cradle *c*. The gun is supported and slides in recoil in the cradle. The weight of all the revolving parts is supported by a roller bearing *r* on a central boss in the base of the pedestal. In the lower rear portion of the cradle are formed a central recoil cylinder and two spring cylinders, Fig. 143.

Bolted to the arms of the pivot yoke, on each side, are brackets to which are attached platforms for the gunners. The platforms move with the gun in azimuth and carry the gunners undisturbed in the operations of pointing.

The carriage may be traversed from either side. The shafts of the traversing hand-wheels extend downward toward the pedestal and actuate a horizontal shaft held in bearings on the pivot yoke. A worm on this shaft acts on a circular worm-wheel surrounding the top of the pedestal, *t*, Fig. 142.

Elevation is given by the upper hand-wheel, on the left side only. The elevating gear is supported by a bracket bolted to the platform bracket and works on an elevating rack attached to the cradle, the center of the rack being in the axis of the trunnions.

The traversing rack, or worm-wheel surrounding the upper part of the pedestal, is held to the pedestal by an adjustable friction band; and a worm-wheel in the elevating gear, contained in the gear casing fixed to the elevating bracket, Fig. 143, is held between two adjustable friction disks. These friction devices are so adjusted as to enable the gun to be traversed or elevated without slipping of the mechanism, and yet to permit slipping in case undue strain is brought on the teeth of the worm-wheels.

A shoulder guard is attached to the cradle on each side of the gun to protect the gunners from injury during movement of the piece in recoil.

Open sights and a telescopic sight are seated in brackets on the cradle on each side of the gun. Dry batteries in two boxes held in brackets secured to the platform brackets supply electric

Digitized by Google

power for firing the piece and for lighting the electric lamps of the sights.

The shield, of hardened armor plate, 4½ ins. thick, is fastened by two spring supports to the sides of the pivot yoke. The bolt holes for the shield support are seen in Fig. 143. The shield is pierced with a port for the gun and with two sight holes, and is inclined at an angle of 40° with the horizon.

Barbette Carriage Model of 1910 *for 6-in. Guns.*—This carriage is similar to that just described except in the following respects: The pivot yoke surrounds the pedestal, the bearings being formed on the outside of the latter. A double elevating screw similar to that used in the 3-in. field gun carriage is used instead of a toothed rack in the elevating mechanism. The shield is cylindrical or elliptical in cross-section, and it is mounted on the carriage so that the right line elements are vertical instead of inclined at 40°. The shield is 5.3 ins. thick and made of special cast steel.

208. The Balanced Pillar Mount.—A variation of the mount just described is found in the balanced pillar mount, also called the *masking parapet mount.* This mount is constructed for guns up to 5 ins. in caliber. The purpose of this mount is to afford a means of withdrawing the gun, when not in use, behind the parapet and out of the view of the enemy. The gun is withdrawn behind the parapet only after the firing is completed, and not after each round. Guns mounted on the disappearing carriages later described are withdrawn from view after each round fired.

The construction of the balanced pillar mount will be understood from Fig. 144. The pintle yoke, with all the parts supported by it, rests on the top of a long steel cylinder which has movement up and down in an outer cylinder. The base of the pintle yoke is circular. It embraces a heavy pintle formed on the top of the cylinder and rests on conical rollers which move on a path provided on the cylinder top. Clips attached to the base of the pivot yoke engage under the flanges of the roller path and hold the top carriage to the cylinder.

Imbedded in the concrete of the platform is the outer cast-iron

Digitized by Google

cylinder in which the inner cylinder slides up and down. The weight of the inner cylinder and supported parts is balanced by

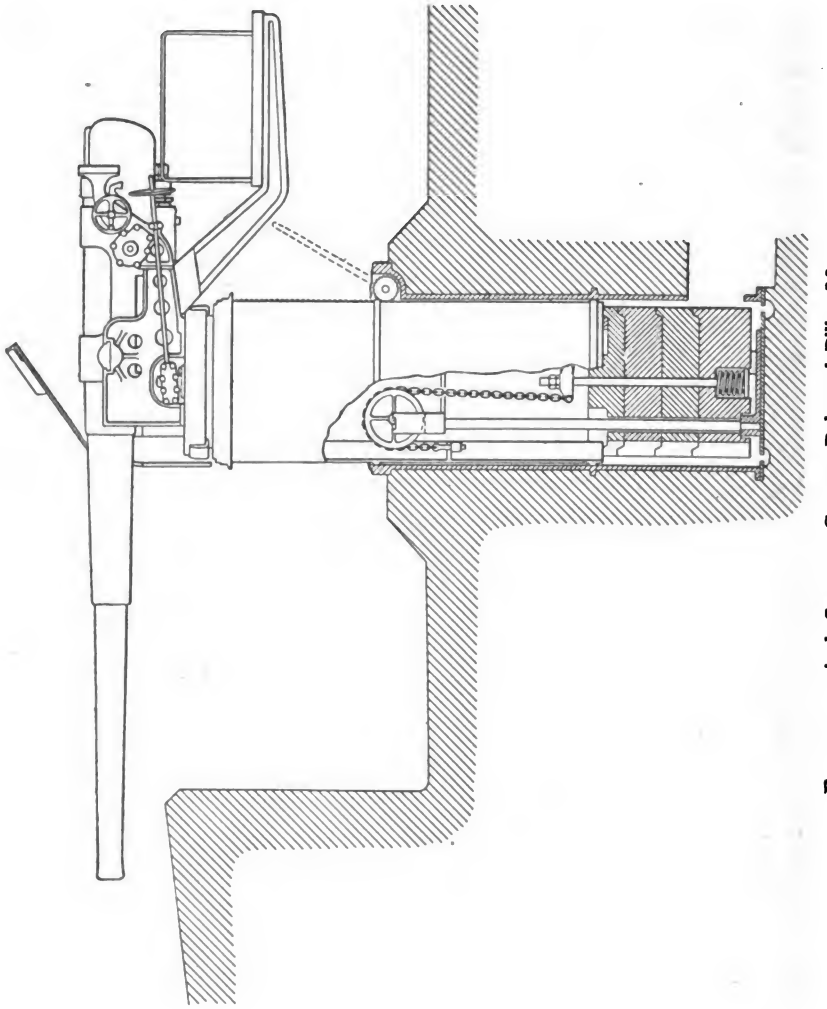

FIG. 144.—5-inch Seacoast Gun on Balanced Pillar Mount

lead and iron counterweights strung on a central rod which is connected to brackets on the inside of the inner cylinder by three chains. The pulleys over which the chains pass are supported on

Digitized by Google

posts that pass through holes in the counterweight and rest in sockets formed in the bottom of the cylinder. For lifting and lowering the inner cylinder with the gun and top carriage, a vertical toothed rack is fixed to the exterior of the inner cylinder. A pinion is seated in bearings provided at the top of the outer cylinder and engages in the rack. The pinion is turned by means of two detachable levers mounted on the ends of the pinion shaft. By means of a friction clamp the pinion is made to hold the elevated carriage against any sudden downward shock.

The construction permits a vertical movement of the gun and carriage of about $3\frac{1}{2}$ ft.

When firing, the muzzle of the gun projects over the parapet; and before lowering, the gun is turned parallel to the parapet.

In a similar mount provided for 3-in. guns the outer cylinder is a double cylinder. The counterweight is annular and occupies the space between the two cylinders composing the double outer cylinder. The lifting levers are applied directly to the shaft of one of the chain pulleys, over which pass the chains that connect the counterweight to brackets on the outside of the inner cylinder. The brackets move in slots provided in the interior of the double cylinder.

209. Barbette Carriages for the Larger Guns.—Guns from 8 to 12 ins. in caliber are mounted in barbette on carriages similar in construction to that shown in Fig. 145. The carriages are made principally of cast steel, all the larger parts with the exception of the base ring being of that metal. The cast iron base ring, *A*, Fig. 146, has formed on it a roller path, *b*, on which rest the live conical rollers *E* of forged steel. The rollers are flanged at their inner ends and kept at the right distance apart by outside and inside distance-rings *B*. The central upwardly extending cylinder *c* forms a pintle about which the upper carriage revolves. Embracing the pintle and resting on the rollers is an upper circular plate called the racer. Clips attached to the racer, see Fig. 145, and engaging under the flange of the lower roller path hold the parts together under the shock of firing. The two cheeks, *C*, Fig. 145,

Digitized by Google

of the chassis are cast in one piece with the racer for the smaller carriages and separately for the larger carriages, and are connected

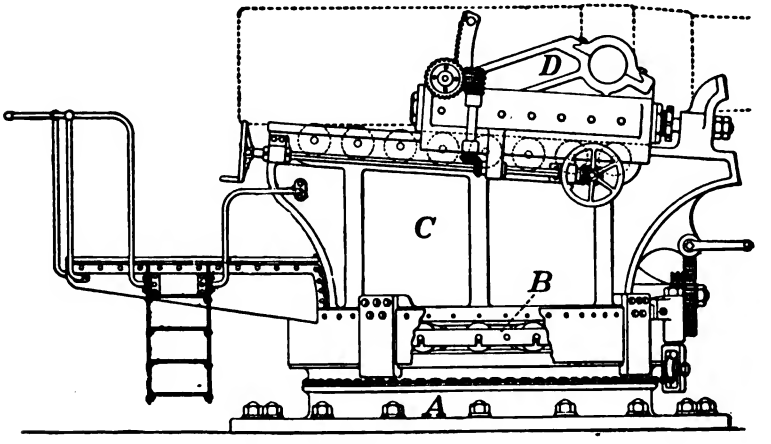

FIG. 145.

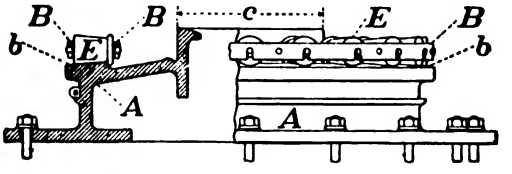

FIG. 146.

together by transoms and strengthened by inner and outer ribs. A groove or recess is formed in the upper part of each cheek, see Fig. 147, for the series of rollers seen in Fig. 145, on which the top carriage moves in recoil. The axles of the rollers are fixed in the walls of the grooves at such a height that the tops of the rollers are just above the top of the chassis.

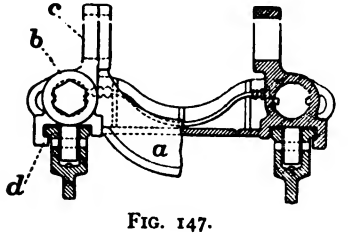

FIG. 147.

The top carriage, *D*, Fig. 145, and *a*, Fig. 147, rests on the rollers and is held to the chassis by means of the clips, *d*, Fig. 147. The top carriage is cast in one piece.

Digitized by Google

It consists of two side frames united by a transom *a* passing under the gun. The side frames contain the trunnion beds *c* for the gun trunnions and the two recoil cylinders *b*. The piston rods of the recoil cylinders are held in lugs formed on the front of the chassis.

Elevation from minus 7° to plus 18° is given by means of the hand-wheel seen near the breech of the gun, Fig. 145, or by the hand-wheel just under the top carriage. The carriage is traversed by means of the crank handle in front of the chassis. Through a worm and worm-wheel the crank actuates a sprocket-wheel fixed in bearings on the chassis. A chain that encircles the base ring and that is fast to the base ring at one point passes over the sprocket-wheel. When the sprocket-wheel is turned it pulls on the chain and causes the chassis to revolve.

In later carriages the chain is replaced by a circular toothed rack attached to and surrounding the base ring, and the sprocket-wheel is replaced by a gear train whose end pinion meshes in the rack. There is less friction and less lost motion with this construction.

The shot is hoisted to the breech by means of an electrically operated hoist attached to the side of the carriage.

When the gun is fired, the gun and top carriage recoil to the rear on the rollers. The length of recoil is limited by the length of the recoil cylinder, and on this type of carriage is about five calibers. The recoil is absorbed partly in lifting the gun and top carriage up the inclined chassis rails and partly by friction, but principally by the resistance of the recoil cylinders, as explained in the chapter on recoil.

On cessation of the recoil the gun returns to battery under the action of gravity, the inclination of the chassis rails, 4°, being greater than the angle of friction.

Latest Model Barbette Carriage for Large Caliber Guns.—In this carriage the gun is mounted in a cradle similar to that for the pedestal mount which has been described. The trunnions of the cradle rest in trunnion beds formed in the cheeks of the chassis. These cheeks are bolted to a racer, which is supported by a base

Digitized by Google

ring through a ring of rollers, as in the older model barbette carriage.

The carriage is mounted in a well formed in the emplacement, larger in diameter than the base ring, and about 10 ft. deep. A steel platform supported by brackets from the chassis, on a level with the emplacement, covers the well and protects the parts of the carriage underneath.

Quick-motion elevating and traversing cranks are underneath this platform, while slow-motion hand wheels are provided above the platform, near the sight range drums.

The carriage permits of firing at all elevations up to 35°.

210. Disappearing Carriages.—The importance of the function of the heavy seacoast guns, the difficulty in the way of quick or extensive repairs to their mounts, the great cost of the guns and their carriages, are all considerations that point to the desirability of giving to these guns and carriages the greatest amount of protection practicable.

The guns are therefore emplaced in the fortifications behind very thick walls of concrete, which are themselves protected in front by thick layers of earth. Additional protection is obtained by mounting the guns on carriages which withdraw the guns from their exposed firing position above the parapet to a position behind the parapet and below its crest, where the gun and every part of the carriage except the sighting platforms and sight standards are protected from a shot that grazes the crest at an angle of 7° with the horizontal.

An additional and very important advantage gained by the use of these carriages is the increased rapidity of fire obtained from the guns mounted upon them. The guns in their lowered positions are at a convenient level for loading, and the time necessary to raise the projectile to the gun in the old model barbette carriages, or to depress the gun to the loading position in the latest model barbette carriages, is thus saved.

12-in. Disappearing Carriage, Model 1901.—The annular base ring, *b*, Fig. 148, surrounds a well left in the concrete of the emplace-

Digitized by Google

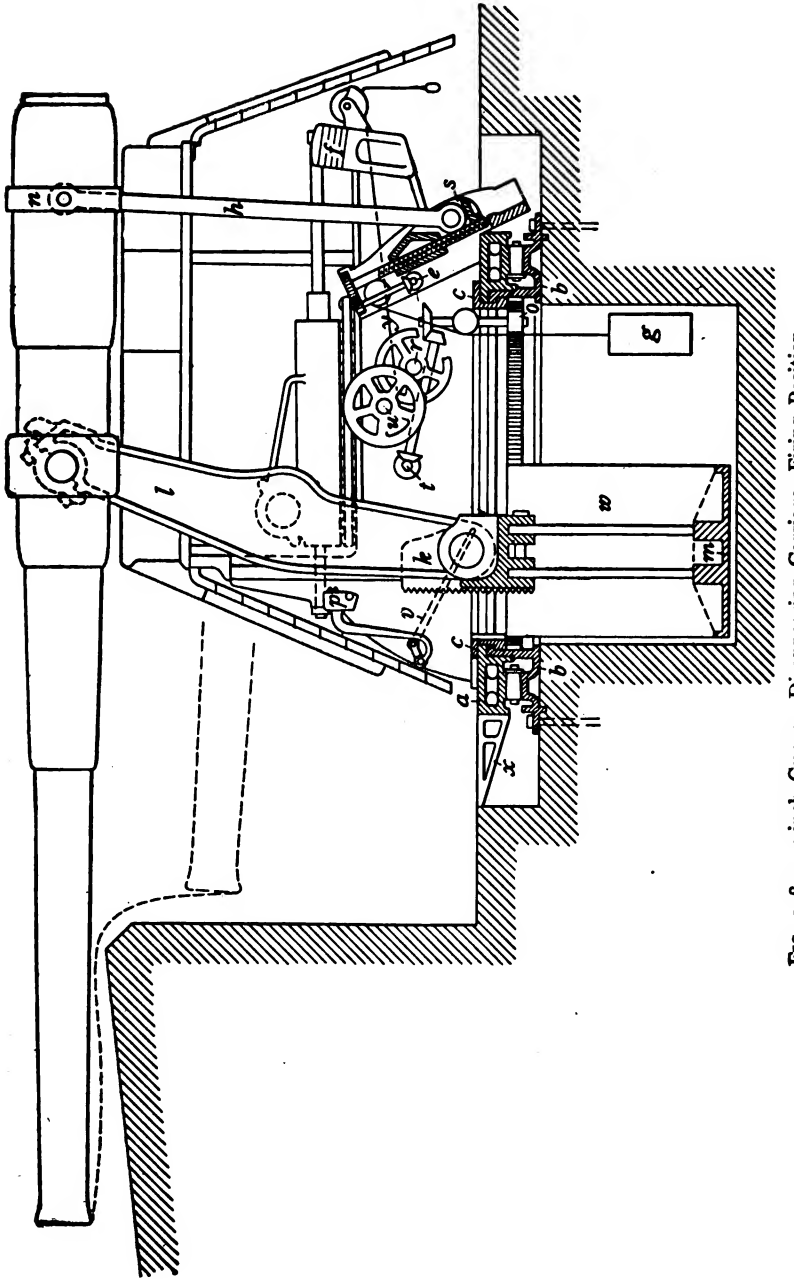

FIG. 148.—12-inch Gun on Disappearing Carriage, Firing Position.

Digitized by Google

ment. The racer *a* rests on live rollers on the base ring and is pintled on a cylinder formed by the inner wall of the base ring. The racer supports the superstructure as in the carriage just described. It is held to the base ring by clips *c*, which engage under a flange on the inside of the pintle. A working platform, or floor, of steel plates is fixed to brackets *x* fastened to the racer, and moves the carriage in azimuth.

The forward ends of the chassis cheeks are continued upward, and on the inside of the cheeks and of the upward extensions are formed vertical guideways for the crosshead *k*, from which the counterweight *w* is suspended.

Gun-lifting System.—The top carriage, similar in construction to that of the barbette carriage, rests on flanged live rollers which roll on the rails of the chassis. The rollers are connected together by side bars in which the axles of the rollers are fixed.

The gun levers *l* are trunnioned in the trunnion beds of the top carriage. They support the gun between their upper ends, and between their lower ends, the crosshead *k* from which the counterweight is suspended.

The crosshead is provided with clips that engage the vertical guides formed on the inside of the chassis cheeks. Cut on the front faces of the clips of the crosshead are ratchet teeth in which pawls *p* engage to hold the counterweight up after the gun has recoiled. The pawls are pivoted on the chassis. Levers *v* pivoted on the ends of a shaft across the front of the chassis serve as means for releasing the pawls when it is desired to put the gun in battery.

The counterweight consists of 102 blocks of lead of varying size, weighing approximately 164,700 lbs. It is piled on the bottom plate *m*, which is suspended by four stout rods from the crosshead. The preponderance of the counterweight may be adjusted, within limits, by the addition or removal of small weights at the top.

211. **Elevating System.**—The gun-elevating system consists of the band *n* doweled to the gun and provided with trunnions that are engaged by the forked ends of the elevating arm *h*. The

Digitized by Google

elevating arm has at its lower end a double-ended pin which rotates in bearings in the elevating slide *s*. The elevating slide has a movement up and down on an inclined guideway machined on the rear face of the rear transom. Movement is given to the slide by means of a large axial screw on which the slide moves as a nut prevented from turning. The screw is turned by gearing on the shaft *e* actuated by hand-wheels outside the carriage.

A slow-motion hand wheel on the left-hand side of the carriage near the range disk is also provided. In order to counterbalance the weight of the elevating arm and band, and to equalize the efforts required in elevating and depressing the gun, a wire rope passes from the elevating slide over pulleys and supports a counterbalancing weight *g*. The gun moves in elevation from minus 5° to plus 15°.

Traversing System.—Crank-handles on the traversing shaft *t* actuate, through gearing, a vertical shaft carrying at its lower end a pinion *o*, which works in a circular rack on the inside of the base ring. In a convenient position on the racer near the azimuth pointer is placed the lever of a traversing brake, not shown, which works against the base ring. By its means traversing is retarded as the carriage approaches any desired azimuth.

A slow-motion traversing hand wheel is provided near the sight on the left-hand sighting platform.

Retracting System.—Means are provided to bring the gun down from its firing position when for any reason it has been elevated into battery and not fired. Detachable crank-handles mounted on the ends of the shaft *r* turn two winding drums on the shaft *u* inside the chassis. A wire rope *y* leads from each drum around a pulley at the rear end of the chassis to the top of the gun lever, a loop in the end of the rope engaging over the hook of the lever.

An electric motor is also provided for rapid retraction.

Sighting System.—Elevated platforms are provided on each side of the carriage. The telescopic sight is mounted above the left platform on a hollow standard that rises from the floor of the racer.

Digitized by Google

Operation.—The operation of the carriage for firing is as follows: The gun is loaded in its retracted position, being held in that position by the pawls *p* engaged in the notches on the crosshead *k*. After the gun is loaded the tripping levers *v* are raised, releasing the pawls from the notches in the crosshead. The counterweight falls and the top carriage moves forward on its rollers, the last part of its motion being controlled by the counter-recoil buffers in the recoil cylinders, so that the top carriage comes to rest without shock on the chassis. By the movement of the gun levers the gun is lifted to its elevated position above the parapet.

When the piece is fired the movements are reversed in direction. The recoil forces the gun to the rear, the top carriage rolls back to the chassis rails and the counterweight rises vertically under the restraint of the guides engaged by the crosshead.

In the movement either way the upper end of the gun lever describes an arc of an ellipse. The path of the muzzle of the gun, indicated in Fig. 148, is affected by the constraint of the elevating arm. The ellipse or similar curve is the most favorable figure to follow in the movement of a gun on a disappearing carriage. From the firing position the movement of the gun is at first almost horizontally backward, and the movement downward occurs principally in the latter part of the path. Therefore the carriage that moves the gun in an elliptical or similar path can be brought nearer to the parapet and thus receive better protection than any other carriage.

The recoil is controlled principally by the recoil cylinders, and the shock at the cessation of motion is mitigated by two buffers *f* which receive the ends of the gun levers. The buffers are composed of steel plates alternating with sheets of balata.

Balata is a substance that resembles hardened rubber. It has not as great elasticity as rubber but does not deteriorate as rapidly under exposure to the weather.

212. Modification of the Recoil System.—In the chapter on recoil it was pointed out that there is a disadvantage in having the control of the counter recoil in the same hydraulic cylinders that

Digitized by Google

control the recoil. The adjustment of the counter-recoil system affects the adjustment of the recoil system.

It will also be observed in the carriage just described that in the latter part of the movement in recoil the gun is moving almost vertically downward. Consequently the movement of the top carriage to the rear is very slight during this part of the recoil, and the slight movement affords little opportunity for the close control by the recoil cylinders of the final movement of the gun. But it is in the last part of the recoil that complete control of the movement of the gun is most desirable, in order that the gun may be brought to rest at any desired position for loading, and without shock to the carriage.

While the movement of the top carriage is least rapid at the latter end of recoil the counterweight has then its most rapid movement. Therefore a recoil cylinder fixed so as to move with the counterweight will afford the best control of the final movement of the gun.

The top carriage has its most rapid movement at the latter part of the movement of the gun into battery, while the counterweight has its least rapid movement at that time. The control of the counter recoil is therefore best effected through the top carriage.

By retaining, therefore, to act on the top carriage, recoil cylinders adapted for the control of the counter recoil only, and by adding to the counterweight a cylinder adapted for control of the recoil, we will obtain the advantage of completely separating the two systems, thus making them capable of independent adjustment, and the advantage of obtaining from each system the greatest control of the movement to which it is applied.

Six-in. Disappearing Carriage, Model of 1905.—Fig. 149 shows the modified recoil system described above as applied to the 6-in. disappearing carriage, model of 1905.

The recoil cylinder is the same as that described in Art. 200.

The counter recoil is checked by the short cylinders *s* mounted on each chassis rail in front of the top carriage. The pistons of

Digitized by Google

the counter-recoil cylinders are not provided with apertures for the flow of the liquid from one side of the piston to the other, but the flow of the liquid takes place through the pipes *p*, which are led

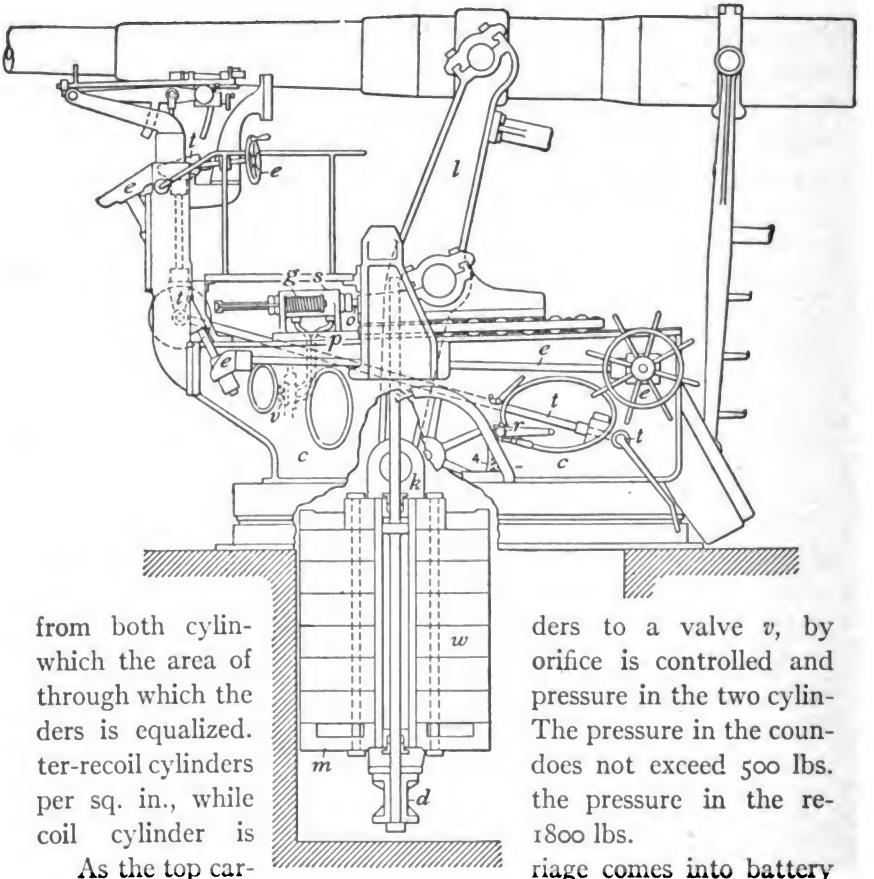

FIG. 149.

from both cylinders to a valve *v*, by which the area of orifice is controlled and through which the pressure in the two cylinders is equalized. The pressure in the counter-recoil cylinders does not exceed 500 lbs. per sq. in., while the pressure in the recoil cylinder is 1800 lbs.

As the top carriage comes into battery the front of the carriage strikes the rear end *o* of the piston rod and forces the piston through the cylinder against the liquid resistance and against the action of springs *g* mounted on each side of the cylinder. The springs act on central rods connected to the forward end of the piston, and as the top carriage moves from battery the springs move the piston

Digitized by Google

to the rear in position to be acted on by the top carriage as it comes back into battery.

There are other points of difference between this carriage and the carriage last described.

The rollers of the top carriage are geared to the top carriage so that they are compelled to move with the top carriage and there can be no slipping of the top carriage on the rollers. In present service carriages this slipping sometimes occurs as the gun recoils, so that on counter recoil the rollers reach their position in

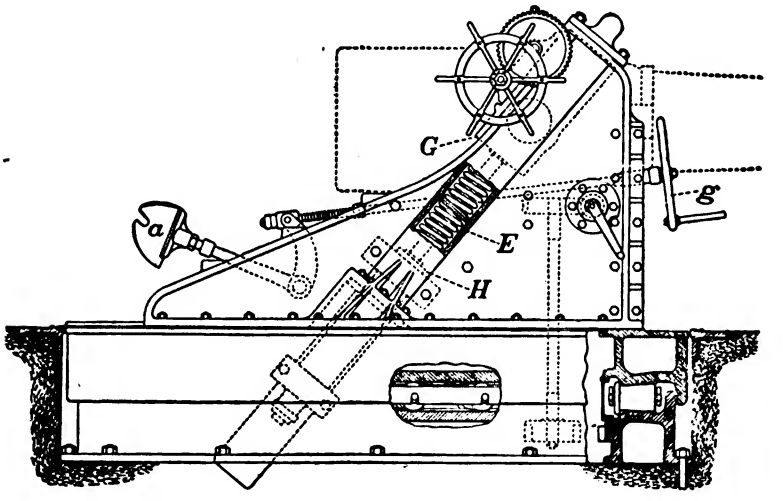

FIG. 150.

battery before the top carriage, and prevent the top carriage from coming fully into battery.

The figure shows the sight standard located at the forward end of the sighting platform. This was done to get better protection for the gunner, but it was found that the blast from the gun was so severe as to interfere with the gunner and in later carriage the sighting platform is located further to the rear.

A number of 14-in. disappearing carriages (model of 1907), having this method of recoil control, have been built.

Digitized by Google

213. Seacoast Mortar Carriages.—There are three types of seacoast mortar carriages in our service. A short description of each will be given. Carriages of the models of 1891 and 1896 permit firing of the mortars only between elevations of 45° and 65° while carriages of the model of 1908 permit firing of the mortar at all elevations from 0° to 65°.

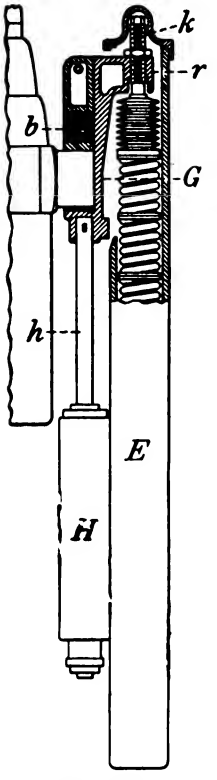

FIG. 151.

The 12-in. Mortar Carriage, Model 1891.—The 12-in. mortar carriage, model 1891, on which many 12-in. mortars are mounted in our fortifications, is shown in Figs. 150 and 151.

The spring cylinders *E* are formed in the vertical cheeks bolted to the racer. Inside the cheeks are inclined guideways for sliding crossheads *G*. The crossheads receive the trunnions of the gun. The pistons *h* of the recoil cylinders project downward from the crossheads and enter the recoil cylinders *H* attached to the lower parts of the spring cylinders. The crosshead *G* has at its upper end an arm, *r*, Fig. 151, which projects outwardly into the spring cylinder and carries at its outer end the adjusting screw *k*, which rests on top of the column of springs. The springs are compressed when the gun recoils, and return the gun to battery on the cessation of recoil. By means of the adjusting screw *k* the tension on the springs may be adjusted to bring the mortar fully into battery.

This carriage was originally provided with a shot hoist shown at *a*. This has been superseded by a shot truck.

The provision for the flow of liquid in the recoil cylinder from one side of the piston to the other differs in this carriage from that described in other carriages. A small cylinder, *A*, Fig. 152, is formed outside the recoil cylinder proper, *H*. Holes *a*, bored

Digitized by Google

through the dividing wall, form passages through which the oil may pass from the front of the piston to the rear. The piston head in its movement closes the holes successively. Thus as the velocity of recoil decreases the area open to the flow of the liquid is reduced. The area of aperture is also regulated by screw throttling plugs *b* that are seated in the outer wall of the small cylinder. These plugs have stems of different diameters, and are used to partially or wholly close any of the passages in the proper regulation of the recoil. The recoil cylinders on each side of the carriage are connected by the equalizing pipe *p*.

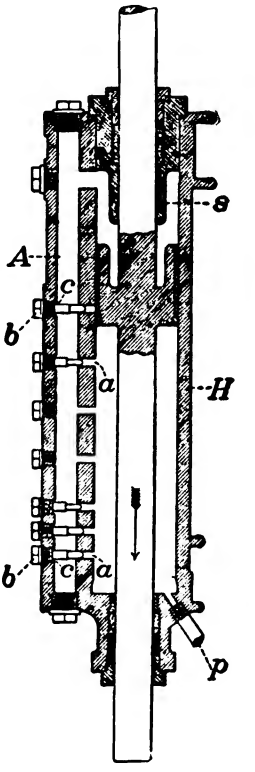

FIG. 152.

The counter recoil is checked and the gun brought into battery without shock by the counter-recoil buffer *s*, an annular projection formed on the cylinder head surrounding the piston rod. The buffer enters, with a small clearance, an annular cavity in the head of the piston, and the liquid in the cavity escapes slowly through the clearance.

214. The 12-inch Mortar Carriage, Model 1896.—The construction of the 12-in. mortar carriage, model 1896, will be understood from Fig. 153. The mortar is supported by the upper ends of the two arms of a saddle *d* which is hinged on a heavy bolt to the front of the racer. The arms of the saddle are connected by a thick web. Extending across under the web is a rocking cap-piece, *c*, against which five columns of coiled springs act, supporting the gun in its position in battery and returning it to battery after recoil.

The lower ends of the springs rest in an iron box trunnioned in two brackets bolted to the bottom of the racer. The box oscillates as required during the movement of the saddle in recoil and

Digitized by Google

counter recoil. Holes in the bottom of the box and in the cap-piece and saddle web permit the ends of the rods on which the springs are strung to pass through during the movement.

The recoil cylinders *h* are trunnioned in bearings fixed to the top of the racer. Bolted to the top of each cylinder is a frame *f* which serves as a guide for the crosshead *o* at the upper end of the piston rod. The crosshead embraces the stout pin *r* which extends outward from the trunnion of the mortar and communicates the motion of the piece in recoil to the piston rod.

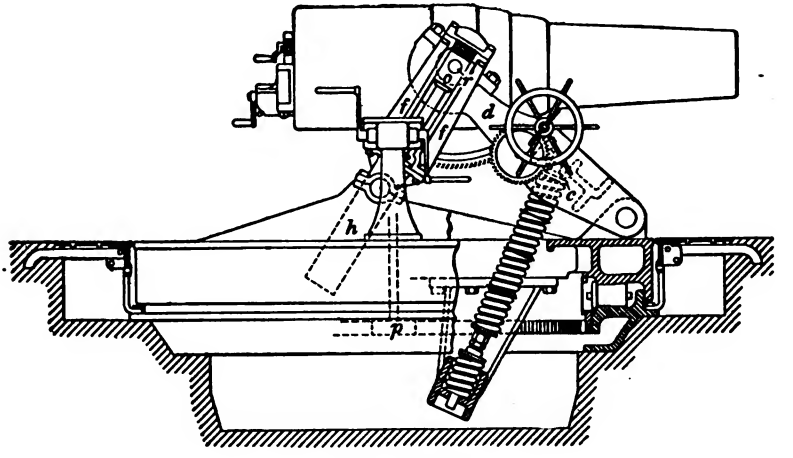

FIG. 153.

The recoil cylinders formerly used were of the type shown in Fig. 152, but these have all been modified by closing up the by-pass and using throttling grooves as in some gun carriages.

The gun is elevated by the mechanism shown mounted on the saddle, Fig. 153, and traversed by means of the crank shaft and mechanism supported in a vertical stand on the racer. A pinion *p* on the end of a vertical shaft engages in a circular rack bolted to the inner surface of the base ring.

The movement of the saddle in recoil causes the gun to rotate on its trunnions. To prevent excessive rotation of the gun and

Digitized by Google

excessive strain on the elevating mechanism, a friction collar is provided in the large gear wheel of the elevating mechanism. The collar slips in the gear wheel when the strain is excessive.

For determining elevation, a quadrant, similar to the gunner's quadrant described in the chapter on sights, is permanently attached to a seat prepared on the left trunnion of the mortar.

215. The 12-Inch Mortar Carriage, Model of 1908.—This carriage was designed to enable the mortar mounted thereon to be fired at all elevations from zero to 65°, and to permit the laying of the mortar in azimuth and elevation to continue uninterruptedly while the mortar is moved to 0° elevation for loading.

Base Ring.—Racer.—Chassis.—The base ring 1, Fig. 154, of cast

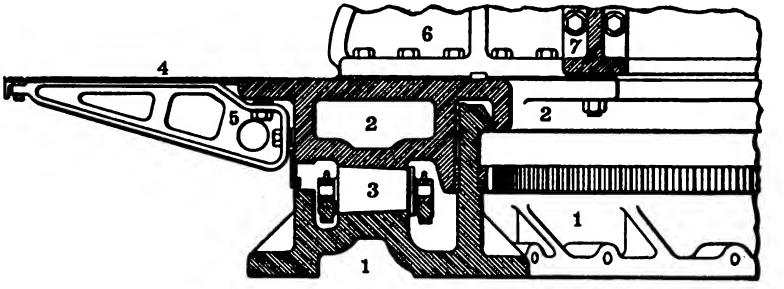

FIG. 154.—Section of Base Ring and Racer. 12-inch Mortar Carriage, Model of 1908.

iron, is similar to those of the mortar carriages of older models. The racer 2 of cast steel is different from those of the mortar carriages of older models, being like the racers of the disappearing carriages or of the barbette carriages for larger guns. It rests on a ring of live rollers 3 running on the roller path of the base ring. A ring of plates 4 supported on brackets 5 bolted to the outer surface of the racer extends the upper surface of the racer so as to form a larger working platform. Bolted to the upper surface of the racer are two chassis 6 of cast iron provided with trunnion bearings in which rest the trunnions of the cradle. The chassis are connected at the front by a transom 7 of cast steel bolted at each end to the chassis and bolted and keyed at the bottom to the racer.

Digitized by Google

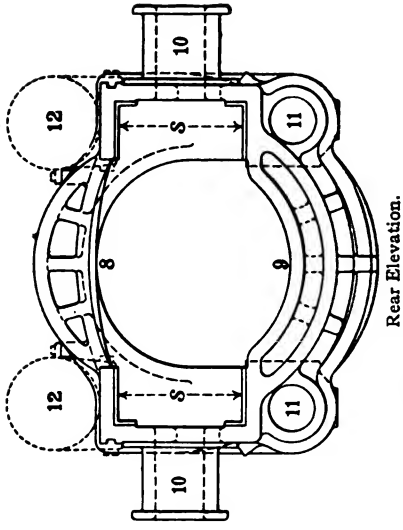

Rear Elevation.

Elevation of Left Side.

FIG. 155.—Cradle of 12-inch Mortar Carriage, Model of 1908.

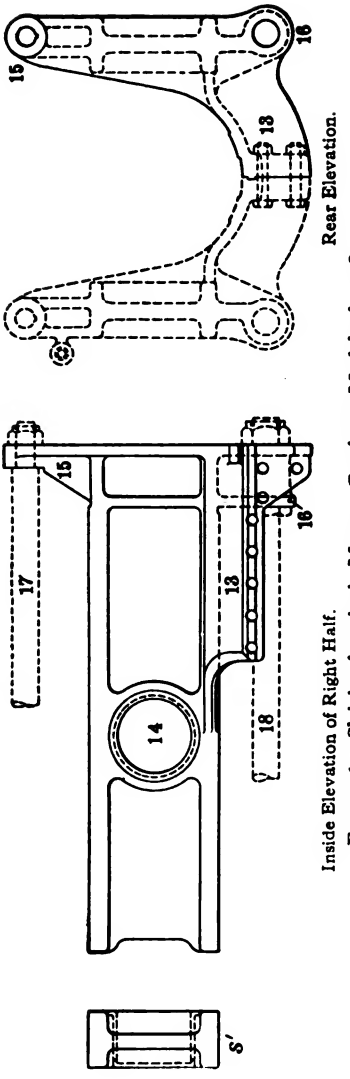

Rear Elevation.

Inside Elevation of Right Half.

FIG. 156.—Sleigh of 12-inch Mortar Carriage, Model of 1908.

Digitized by Google

Cradle.—The cradle, Fig. 155, of cast steel, is a single casting as shown in the figure. The two sides are connected at the front by an arched transom 8 which curves upward; and at the rear of the cradle by a similar arched transom 9 which curves downward. Both of these transoms are heavily ribbed to give them the required strength. The upper transom 8 connects only that part of the cradle which is in front of the trunnions, and the lower transom 9 only that part of the cradle which is in the rear of the trunnions. This construction permits the mortar to be brought from any angle of elevation to the loading position no matter what the angle of elevation of the cradle may be.

Formed in the bottom of the cradle are two recoil cylinders 11, one on each side, which are lined with forged-steel liners; and on the upper surface of the cradle directly over the recoil cylinders are seats for the spring cylinders 12 of forged steel, one on each side. The trunnions 10 are formed on the outside of the cradle and are a part of the casting as shown in the figure; these are the trunnions that rest in the trunnion beds of the chassis. In each side of the cradle are guideways *S* in which is mounted and slides a part of the carriage called the sleigh.

Sleigh.—The sleigh, Fig. 156, of cast steel is made in halves joined together at the rear by a transom 13 bolted along the lower center line by eight bolts. A cross-section of each side of the sleigh is as shown at *S'*; on these sides the sleigh, carrying the mortar with it, slides back and forth in the guideways *S* of the cradle, Fig. 155. On each side are trunnion bearings 14 for the trunnions of the mortar. Formed on the rear of the sleigh are lugs 15, 16; to the upper lugs 15 are fastened the spring piston-rods 17, and to the lower lugs 16, the recoil piston-rods 18.

Two locking pawls 19, Fig. 157, engage with lugs 20 which are a part of the locking band 21 that is attached to the mortar. These pawls 19 are urged in the direction of the vertical center line of the carriage by pawl springs located in the pawls but not shown in the figure.

By pulling downward on a handle 22, located above and near the

Digitized by Google

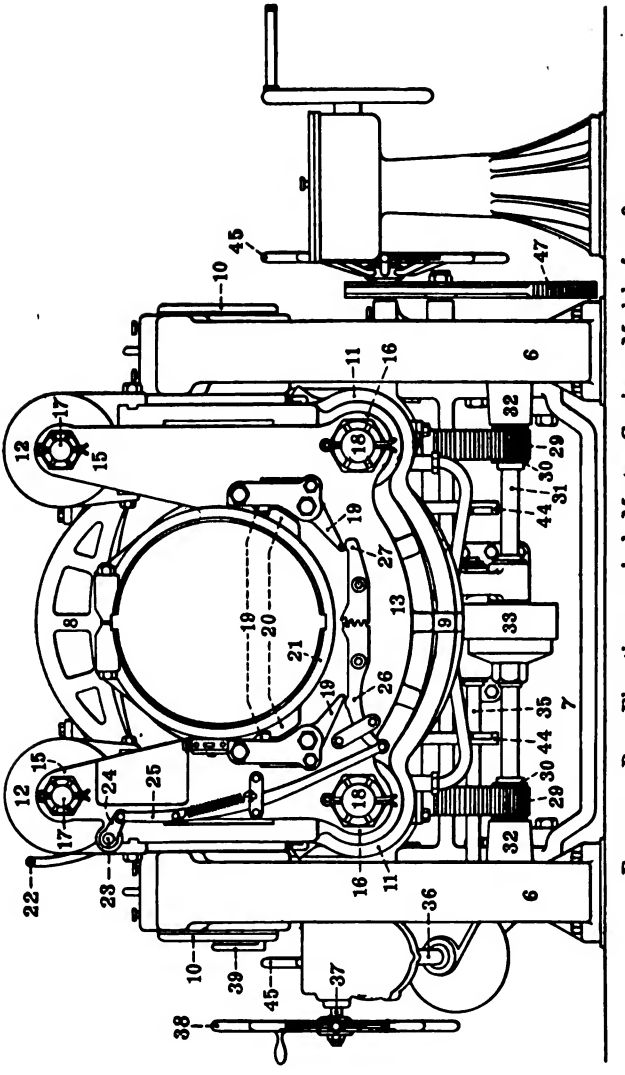

FIG. 157.—Rear Elevation.—12-inch Mortar Carriage, Model of 1908.

Digitized by Google

left trunnion, on the cradle, motion is transmitted through a telescoping shaft 23 to a crank 24 and connecting rod 25, to the pawl cams 26 and 27, which will release the locking pawls 19 from the lugs 20. When the locking pawls are engaged with the lugs on the locking band, the mortar has the same elevation as the sleigh and cradle, but when the locking pawls are disengaged the mortar may be moved in elevation independently on the sleigh. The mortar is at all times supported by its trunnions in the trunnion bearings of the sleigh, and the latter is at all times supported in the guideways of the cradle. The cradle and sleigh have at all times the same elevation.

When the mortar is fired it recoils to the rear, carrying the sleigh with it, the latter sliding in the guideways of the cradle, which does not recoil. The recoil of the sleigh is resisted by the pressure of the oil against the recoil pistons in the recoil cylinders of the cradle. At the end of recoil the counter-recoil springs of the spring cylinders, which were compressed during recoil, return the sleigh and mortar into battery through the spring piston-rods attached to the upper corners of the recoil lug of the sleigh.

216. Recoil Cylinders.—Counter-Recoil Buffers and Springs.—Each recoil cylinder has three throttling grooves cut in the cylinder liner. Enlargements of the piston-rods somewhat less in diameter than the pistons fit closely into the front cylinder heads when the mortar is in battery forming the counter-recoil buffers. The control of the recoil systems is practically the same as that described in Art. 199, of the text. Each spring cylinder contains two columns of spiral springs, one column assembled within the other. Both columns act directly in the piston of the spring piston-rod. The length of recoil is 24 ins.

Traversing Mechanism.—The traversing mechanism is in all respects similar to that shown in Fig. 153. An azimuth circle on the base ring and an azimuth pointer attached to the racer enable the mortar to be set to any desired reading in azimuth.

Elevating Mechanism.—Two elevating racks 29 (Figs. 157 and 158), one on each side, are bolted to the cradle underneath the

Digitized by Google

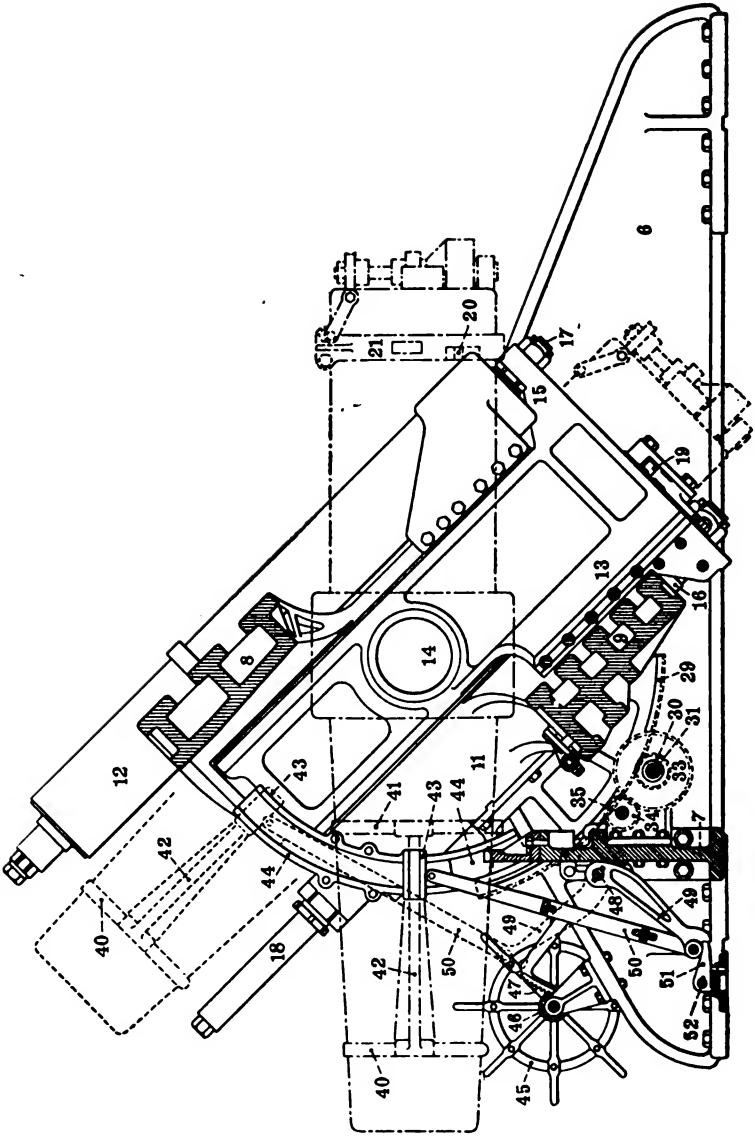

FIG. 158.—Longitudinal Section.—12-inch Mortar Carriage, Model of 1908.

Digitized by Google

recoil cylinders. These racks are arcs of circles whose centers are in the axis of the cradle trunnions. Teeth cut in the racks are engaged by elevating pinions 30 on a horizontal shaft 31 carried in bearings 32 bolted on the inside of the chassis, one on each side. A gear 33 at the middle of this shaft is engaged by a pinion 34 on another horizontal or intermediate shaft 35 which projects through to the outside of the left chassis and carries on its end a bevel gear which engages with another on an inclined shaft 36 extending upward and to the rear. At the upper end of the inclined shaft is a wormwheel which engages with a worm on a short horizontal shaft 37 at right angles to the chassis. On the end of this short shaft is a hand-wheel 38 in a convenient place for manipulation by a man standing on the racer. By turning this hand-wheel the cradle is elevated or depressed around the axis of the cradle trunnions, carrying with it the sleigh and the mortar when the sleigh and the locking band are locked. The elevation given to the cradle is indicated by a quadrant 39 attached to the left cradle trunnion.

217. Quick-loading Mechanism.—The locking pawls on the sleigh will engage with the locking lugs on the locking band of the mortar only when the latter has the same elevation as the cradle, so that the locking mechanism may be disengaged and only the mortar carried to the horizontal position for loading. When it is loaded and returned to the position where the locking mechanism will engage, the mortar and cradle will have the same elevation, whether or not the cradle has in the meantime been moved in elevation by the regular elevating mechanism. The lower parts of the locking lugs 20 on the locking band are beveled, so that when the mortar is being returned for re-engagement with the locking pawls 19, the beveled surface of the locking lugs will force the locking pawls outward against the action of their springs until the locking lugs are in a position to be engaged by the locking pawls; then the pawls 19 on the sleigh will engage the lugs 20 on the band and hold mortar and sleigh together at the same elevation as the cradle. This arrangement permits the laying of the mortar in azimuth and elevation to proceed while the mortar is being loaded.

Digitized by Google

When the mortar has been fired the locking mechanism is disengaged by pulling on the handle 22 on the left side of the cradle.

The mortar is then carried to the loading position by the following mechanism. Two bands 40, 41, Fig. 158, are clamped around the chase of the mortar, one about 12 ins. from the muzzle and the other about 33.25 ins. in rear of the first. These bands are connected by two guide rails 42, one on each side of the mortar, bolted at the front and rear to the bands. A block 43 fits each guide rail in such a manner that the rails may slide through the blocks when the mortar recoils. Two circular guides 44, one on each side, are bolted to the inside of the cradle. Each block has a projecting circular part which fits into one of these circular guides. The centers of the circular guides are the centers of the cradle trunnions. This permits the mortar to slide to the rear through the guide blocks 43, during recoil or counter-recoil. The guide blocks can (if the locking mechanism be disengaged from the locking band) be moved along the circular guides 44, carrying the mortar with them by means of the guide rails 42, thus causing the mortar to rotate about the cradle trunnions. The guide blocks 43 can, however, have no other motion than that along the circular guides 44.

The guide blocks are made to move along the circular guides by the following mechanism. Two hand-wheels 45, one on each side of the carriage, are connected by a horizontal shaft. On this shaft is a pinion 46 actuating a segmental gear 47 on a shaft 48 to which is fastened the elevating crank arm 49 which operates the forked link 50 attached to the guide blocks 43. Operation of these hand-wheels will lower or raise the forked link, causing the blocks at its upper ends to move down or up along the circular guides, thus depressing the mortar to its loading position or elevating it from the loading position to the position where the locking mechanism on the sleigh will engage the locking band on the mortar. To hold the mortar in a horizontal position while it is being loaded, the elevating crank-arm 49 is engaged by the pawl 51; this pawl is attached to a horizontal shaft 52 which projects through both chassis to the outside of the carriage and has on each end of the shaft a pawl treadle

Digitized by Google

not shown in the figure. The pawl 51 is released from its seat on the elevating crank-arm 49, by stepping on the treadles on the outside of the carriage; the mortar can then be brought to the firing position by operating the hand-wheels 45 until the locking band 21 on the mortar is locked to the sleigh.

218. Breech Mechanism.—The breech mechanism of the mortar mounted on this carriage is similar to that used for heavy guns and illustrated in Fig. 102 of the text, except that the worm-wheel is on the upper end of the hinge-pin, and the crank shaft carrying the worm which engages with this worm-wheel extends across the breech, so that the crank handle is on the left side and above the axis of the mortar.

Ammunition Truck.—The ammunition truck for this carriage serves the same purpose and is similar in principle to the ammunition truck for the 12-in. mortar carriage, model of 1896. It has, however, larger wheels and its general arrangement is more like that of a truck for 12-in. disappearing carriage except that no pans are provided for powder charges and the shot tray cannot be raised or changed in elevation, as this is unnecessary with a mortar which has a constant loading angle. As in all modern ammunition trucks for heavy guns and mortars the shot tray extends into the breech to protect the threads during loading and is supported in the breech by a shot tray support at its front end.

A hydraulic stop, instead of the solid or spring-operated stop heretofore used, is placed on the front of the truck to arrest its motion against the breech of the mortar. This change has been made because the older forms of stop caused so much of a jar when the truck hit the breech that damage to or destruction of parts of the truck not infrequently occurred. The hydraulic stop consists of a plunger with elongated piston near its rear end fitting in the bore of a cylinder forming part of a casing bolted to the front of the truck. The cylinder is filled with oil and as the plunger is forced further into it by the impact against the breech the oil passes to the front of the piston through channels cut in its exterior surface. These channels gradually decrease in depth from rear to front and

Digitized by Google

the cylinder is contracted in one part to fit closely over a certain length of the piston, so that the area of orifice depends on what part of the channels in the piston are opposite this contracted part of the cylinder and decreases as the plunger is forced further into the cylinder. This arrangement decreases the shock on the ammunition truck when it is run up to the breech by providing for a gradual increase of the force acting to stop the truck. As the plunger is forced in it compresses a helical spring in the rear part of the cylinder. When the truck is removed from the breech of the mortar this spring restores the plunger to its original position. It is probable that hydraulic stops will eventually be applied to all ammunition trucks in the service.

The ammunition truck for this carriage is provided with a brake operated by the hand instead of by the foot.

219. Turret Mounts for Seacoast Guns.—In the defense of a harbor it is sometimes desirable to mount guns on islands limited in area and subject to fire from the water in all directions. In such cases the emplacements for guns mounted on barbette or disappearing carriages may not give sufficient protection or may take up too much room.

Turret mounts have been devised for use in these cases.

These land turrets do not differ in general design from naval turrets, but as there is no restriction as to weight they are made larger and heavier. Magazines and handling rooms are placed a sufficient distance underground to be thoroughly protected.

The ammunition is raised to the guns by methods similar to those used aboard ship.

The barbette of the turret is protected all around by concrete and heavy armor. The exposed part of the turret is protected by the heaviest armor in front and by heavy armor on the back, sides and top.

Anti-Aircraft Guns.—For use in fixed positions anti-aircraft guns are mounted on pedestal mounts similar to those described in Art. 207, but designed to permit an elevation of 85°.

The 3-in. gun is so used in our service. It has a muzzle velocity

Digitized by Google

of 3000 ft. per sec. with a 15-lb. projectile, and is equipped with a special sight permitting quick aiming and firing.

Railroad Mounts for Seacoast Guns.—While guns mounted on railroad cars are not strictly to be classed as artillery of position, the larger calibers thus mounted will be used in our service principally for coast defense. It is probable that 14-in. guns and 16-in. howitzers will be mounted in this manner.

This method of mounting will permit coast defense guns of heavy caliber to be quickly concentrated at any particular point and will have the further advantage of making these guns at all times available for the land defense of coast fortifications or for other purposes.

The special cars upon which these guns will be permanently mounted will allow the guns to be fired from almost any part of the track. During firing the weight will be transferred, by suitable mechanism, from the wheels of the car to a heavy base lowered from the car to the ground for that purpose. No special concrete foundation will be required.

Mobile Artillery

220. Calibers.—The calibers of field guns and howitzers used in the U. S. service are given in the table on p. 386.

Guns.—Aside from the 2.95-in. mountain gun, which is soon to be superseded by the 3.0-in. mountain howitzer, it will be noted that the weights of projectiles for all the guns and howitzers are multiples of 15 lbs., the weight of projectile for the 3.0-in. field gun and howitzer.

Under ordinary conditions the 3.0-in. field gun, with a weight of about 3900 lbs. behind a six-horse team, is about as powerful a gun as can follow an army in motion. For this reason a gun of approximately this caliber has been adopted by most nations as the principal field gun.

The larger caliber guns noted in the table would be slower moving and would follow up the lighter guns. Their fire would be more powerful and effective in places where it could be utilized.

Digitized by Google

MOUNTAIN AND FIELD GUNS AND HOWITZERS

	Model.	Charge, lbs.	Projectile, lbs.	Bursting Charge (Shell), lbs.	Shrapnel Balls, Number.	Muzzle Velocity, f. s.	Max. Pressure, lbs. per sq.in.	Weight of Gun and carriage limbered fully equipped, lbs.	At Maximum Elevation.	
									Elevation. deg.	Range, yds.
2.95-in. mtn. gun	....	.46	12.5	.756	212	920	18,000	830	27	4905
3-in. mtn. howitzer	1911	.46	15	.50	252 / 193	900	19,000	.....	40	5570
3-in. field gun	1904	1.5	15	.50	252 / 193	1700	33,000	4620	15	6000
3.8-in. gun	1907	4.	30	1.87	369	1700	33,000	4800	15.5	7300
3.8-in. howitzer	1908	1.	30	1.87	369	900	19,000	3970	40	5900
4.7-in. howitzer	1912	2.	60	3.24	793	900	20,000	5252	40	6640
4.7-in. gun	1906	6.	60	3.24	793	1700	33,000	8783	15	7940
6-in. howitzer	1908	4.	120	13.87	1084	900	20,000	8611	40	6704

Howitzers.—The guns above named are ordinarily intended for the attack of targets that can be reached by direct fire, that is, by fire at angles of elevation not exceeding 20°. For the attack of targets that are protected against direct fire and for use in positions so sheltered that direct fire cannot be utilized, curved fire, that is, fire at elevations exceeding 20°, is necessary. There is, therefore, provided, corresponding to each caliber of gun, a howitzer of an equal degree of mobility. The howitzer is a short gun designed and mounted to fire at comparatively large angles of elevation.

In order to reduce to the minimum the number of calibers of the mobile artillery and thus simplify as far as possible the supply of ammunition in the field, the calibers of the guns and howitzers have been so selected that, while both guns and howitzers fulfill the requirements as to weight and power for each degree of mobility, the caliber of each howitzer is the same as that of the gun of the next lower degree of mobility. That is, the howitzer corresponding in mobility to one of the guns is of the same caliber as the next heavier gun and uses the same projectile.

Digitized by Google

High-angle Fire Field Guns.—The desirability of plunging high-angle fire against entrenched positions led to the rapid development of howitzers in the mobile artillery of all nations.

As a further development along this line and as a defense against aircraft, field guns are now being designed which permit fire at elevations as high or higher than is permitted by the howitzers.

This development is an improvement in the effectiveness of the field gun, but it will not eliminate the use of howitzers of equal mobility, as the latter use projectiles of double the weight of the former.

221. The Mountain Gun.—For mountain service the system composed of gun and carriage must be capable of rapid dismantling into parts, no one of which will form too heavy a load for a pack mule. The weight of the load, including the saddle and equipment of the mule, should not exceed 350 lbs. The system must be capable of rapid reassembling for action.

The mountain gun used in our service, originally made by Vickers Sons & Maxim of England, has a caliber of 75 millimeters or 2.95 ins., and fires projectiles weighing 12½ and 18 lbs.

As this gun is soon to be replaced by a 3.0-in. mountain howitzer, an extended description of it will not be given.

The gun weighs complete with breech mechanism 236 lbs. It is mounted on a low-wheeled carriage capable of being rapidly disassembled and reassembled. The effective range of the gun is 4000 yds. The muzzle velocity is 920 ft. per sec. with the 12.5-lb. projectile, and the maximum powder pressure is 18,000 lbs. per sq. in.

Transportation.—For purposes of transportation the gun and carriage, with tools, implements, and equipments, are divided into four loads, the principal items of which are the gun, the cradle, the trail, the wheels and axle. These loads, without the pack equipment, weigh approximately 250 lbs. each. The pack saddle and equipment weigh 90 lbs., so that the total weight carried by the mule is about 340 lbs.

The ammunition is carried in 9 loads of 12 rounds each. A box

Digitized by Google

holding 6 rounds is slung on hooks on each side of the pack saddle by loops formed in wire straps about the box. The boxes open at the end so that the ammunition may be removed from them without disturbing the pack.

222. The 3-inch Field Gun. Model of 1904.—The 3-inch field gun is the principal weapon of the field artillery. The gun, of

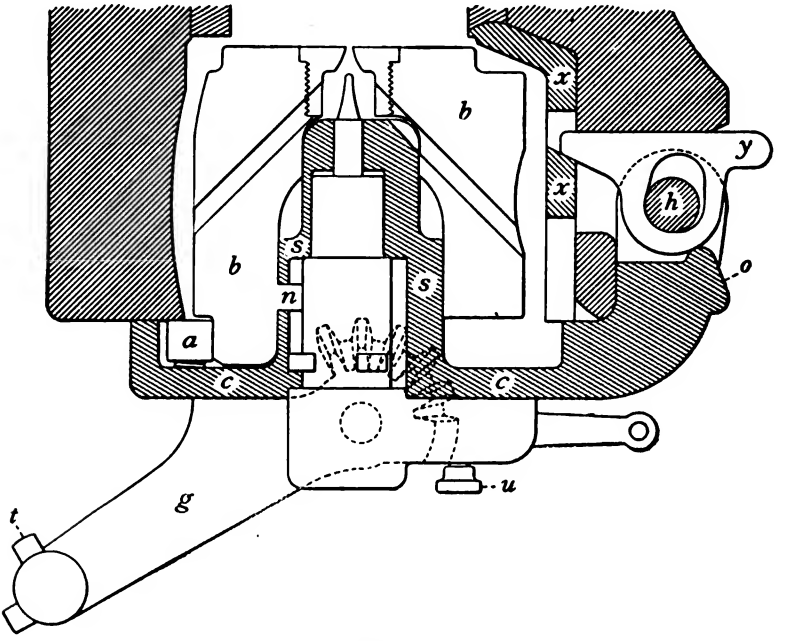

FIG. 159.

nickel steel, is built up in the manner described in Art. 162. A hoop called the clip is shrunk on near the muzzle. On the under side of this hoop, and of the locking hoop and jacket, are formed clips, *k*, Fig. 162, which embrace the guide rails of the cradle of the carriage. The gun slides in recoil on the upper surface of the cradle. A downwardly extending lug, *l*, Figs. 161 and 162, at the rear of the jacket, serves for the attachment of the recoil cylinder, which moves with the gun in recoil.

Digitized by Google

The Breech Mechanism.—The breech mechanism, model 1904, is shown in Fig. 159, in the locked position. The mechanism is of the slotted screw type.

The breech block *b* is cylindrical with four threaded and four slotted sectors. It is mounted on a hollow spindle *s* formed on the carrier *c*, to which it is held by the lug *n*, which engages in a slot cut in the enlarged base of the spindle. On a semicircular boss formed on the rear face of the block is cut a toothed rack, outlined at *z*, Fig. 162. The teeth of a bevel pinion formed on the inner end of the operating lever *g* mesh in the teeth of the rack. The lever is pivoted on a pin which passes through two lugs formed on the rear face of the carrier. On grasping the handle of the lever the pressure against a latch *t* in the handle unlocks the lever from the face of the breech. Swinging the lever to the rear rotates the block until it is stopped by a lug inside the carrier and locked in position by the spring stud *a*. Further movement of the lever causes both block and carrier to rotate together about the hinge pin *h*. When the movement is nearly complete the surface *o* of the carrier bears against the arm of the extractor lever *y*, which causes the extractor *x* to move sharply to the rear and eject the empty cartridge case.

223. The Firing Mechanism.—The firing mechanism, Fig. 160, is contained in the firing lock case *f*, which is inserted into the hollow spindle from the rear, the interrupted lugs *d* on the lock case engaging behind corresponding interrupted lugs *c* on the carrier. Assembled in the lock case are the firing pin *p*, the spiral firing spring, the firing pin sleeve *w*, and the trigger fork *v*, the latter fitting over the squared end of the trigger shaft *h*, which is journaled in an arm of the lock case *f*, Fig. 162, extending downward and to the right outside the carrier.

At the lower end of the trigger shaft *h*, Fig. 162, are two levers at right angles to each other, one marked trigger provided with an eye for the hook of the lanyard, the other acted upon by an upwardly extending lug on the end of the firing lever shaft.

A narrow section of the forward end of the lock case, Fig. 160,

Digitized by Google

is cut out for the flat sear spring *r*. A notch in the sear engages the shoulder formed on the firing pin. The sleeve *w* at its rear end bears upon the last coil of the firing pin spring. When the trigger shaft *h* is turned by a pull on the lanyard, or by means of the firing lever, the trigger fork *v* forces the sleeve *w* to the front, compressing the firing spring. The forward end of the sleeve pushes the sear spring aside from its engagement on shoulder of firing pin, and the compressed spring then drives the firing pin forcibly forward until arrested by the shoulder striking the inner surface of the spindle. When the pull on the lanyard has ceased,

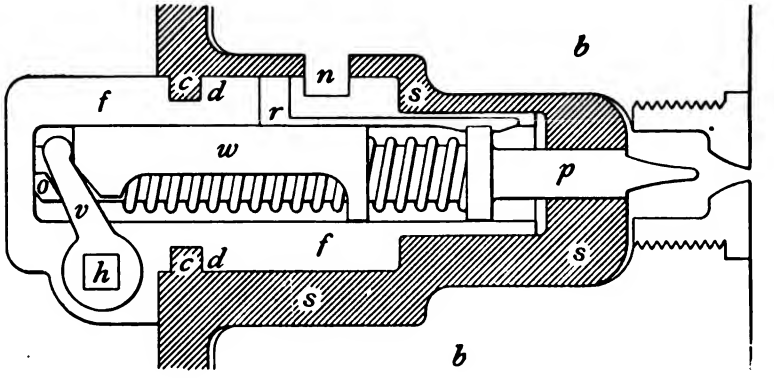

FIG. 160.

the firing spring, still compressed, exerts a pressure against the rear end of the sleeve *w*, thence on the fork *v*, and on the head *o* of the firing pin; and the construction of these parts is such that the spring can regain its extended length only when the parts are in the position shown in the figure. The firing pin is, therefore, immediately withdrawn, on the cessation of the lanyard pull, until caught again by the sear.

The system of cocking and firing the piece by one movement is called the continuous-pull system. The firing spring is compressed only at the moment of firing, whereas in the mechanism that is cocked in opening the breech the firing spring is compressed

Digitized by Google

whenever the breech is opened and may remain compressed for a long time.

Safety Devices.—Safety against discharge before the breech is fully closed is secured as follows. The axis of the spindle *s* on the carrier, Fig. 159, lies $\frac{3}{10}$ of an inch below and $\frac{3}{10}$ of an inch to the right of the axis of the gun. The breech block which revolves on this spindle is, therefore, eccentric with the bore. The firing mechanism is eccentric with the block, the axis of the firing mechanism being fixed in the axis of the bore. When the block is locked the hole in its front end through which the firing pin protrudes in firing is also in the axis of the bore, but as the block is rotated in opening, the hole rotates out of the axis of the bore and the flat surface at its rear end comes in front of the firing pin and prevents movement of the firing pin until the breech is locked.

The headed spring pin *u*, Fig. 162, enters a hole in the carrier and retains the firing mechansim in its position in the carrier. By withdrawing this pin and rotating the firing lock case *f* upward through 45° the interrupted lugs *d*, Fig. 160, on the firing lock case disengage from behind the interrupted lugs *c* on the carrier, and the firing mechanism may be withdrawn from the gun. The breech block is then readily removed. The breech mechanism may thus, without the use of tools, be readily dismantled for repair, or the gun may be quickly disabled in the event of imminent capture.

Four holes are drilled rearwardly through the breech block, *b*, Fig. 159, to permit the escape of gas without injury to the screw threads of the mechanism in case the primer in the cartridge is punctured by the blow of the firing pin.

The 3-in. Gun, Model 1905.—The 3-in. gun, model 1905, is 50 lbs. lighter than the 1902 and 1904 models, the outside diameters being slightly diminished. The twist of the rifling, which in the earlier models increases from 1 turn in 50 calibers at the breech to 1 in 25 at the muzzle, increases from zero at the breech to 1 in 25 at $9\frac{3}{4}$ ins. from the muzzle, from which point it is uniform to the muzzle. The purpose of the change in twist is to diminish

Digitized by Google

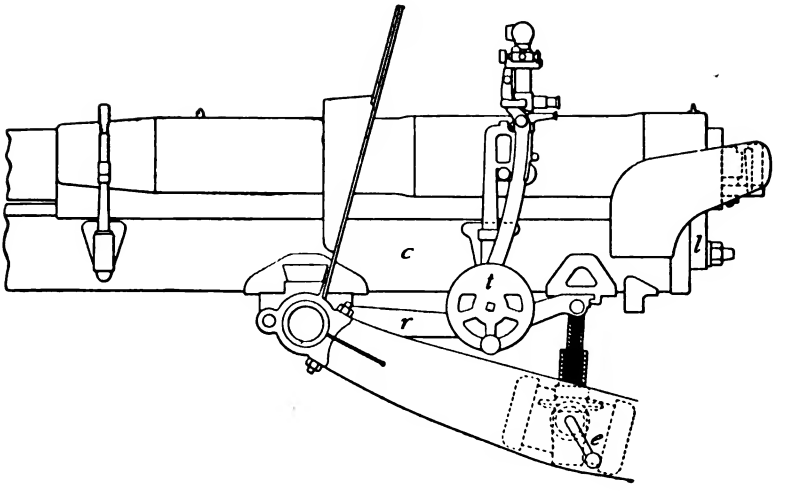

FIG. 161.

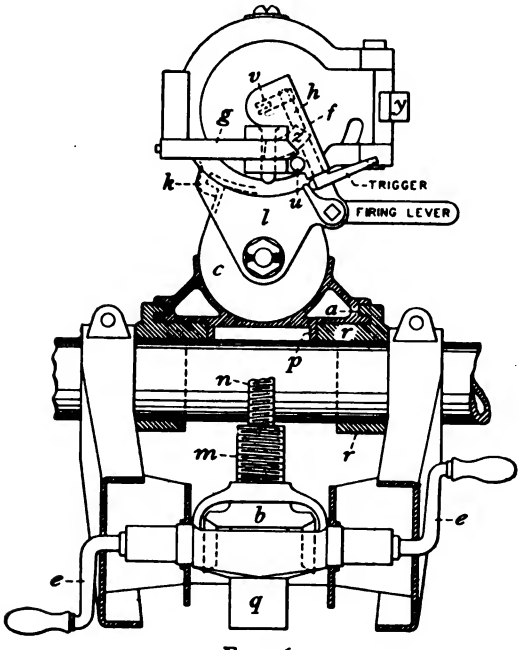

FIG. 162.

Digitized by Google

the resistance encountered by the projectile in the first part of its movement and thereby diminish the maximum pressure. The short length of uniform twist at the muzzle steadies the projectile as it issues from the bore.

224. The Carriage. Model of 1902.—The principal parts of the carriage are the cradle, the rocker, the trail, the wheels and axle.

The Cradle.—The cradle, *c*, Figs. 161 and 162, is a long steel cylinder, which contains the recoil controlling parts. These parts are fully described in the chapter on recoil, and illustrated in Figs. 140 and 141 of that chapter. The gun slides in recoil on the upper surface of the cradle, the clips of the gun, *k*, Fig. 162, engaging the flanged edges. A pintle plate fastened to the bottom of the cradle is provided with the pintle *p*, Fig. 162, and the grooved arc *a*, which serve to connect the cradle to the rocker.

The Rocker.—The rocker *r* embraces the axle between the flasks of the trail by the bearings at its ends. The cradle pintle fits in a seat provided in the rocker above the axle, and the clips on the rocker engage in the grooved arc *a* of the cradle. This construction permits movement of the cradle and gun in azimuth on the rocker, while the rocker itself revolves about the axle and thus gives movement in elevation to the cradle and the gun. The movement in azimuth, 4° either way, is produced by a screw on the shaft of the hand wheel *t*, Fig. 161. The shaft is fixed in bearings in the rocker arms and the screw works in a nut pivoted in a bracket fastened under the cradle.

The double elevating screw, actuated by either of the crank shafts *e* fixed in bearings in the trail, rotates the rocker and cradle about the axle. The bevel pinion on the end of each shaft *e* rotates the bevel pinion *b* in its bearings. The pinion *b* is splined to the outer screw *m* and causes the outer screw to turn in the fixed nut *q* which is supported below the pinion *b* by a transom. The outer screw *m* has a left-handed thread on the exterior and a right-handed thread in the interior. When turned it travels up or down in the nut *q*, and at the same time causes the inner screw *n* to move into or out of the outer screw, the inner screw being prevented from

Digitized by Google

turning by its connection with the rocker arms, *r*, Fig. 161. The movement of the inner screw for each turn of the pinion *b* is thus equal to the sum of the pitches of the outer and inner screws.

The Trail.—The trail, Fig. 163, composed of two flanged steel flasks connected by transoms and top and bottom plates, terminates at its lower end in a fixed spade provided with a float or wings which prevent excessive burying of the spade in the ground. The lower edge of the spade is of hardened steel riveted on so that it may be readily replaced when worn out. The lunette, a stout eye bolt fixed in the end of the trail, engages over the pintle of the limber

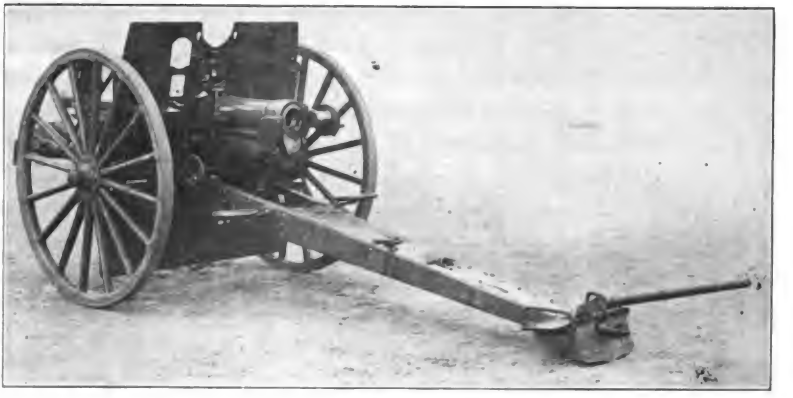

FIG. 163.—3-inch Field Gun, Model 1902.

when the carriages are connected for traveling. Seats for two cannoneers who serve the piece in action are attached to the trail, one on either side near the breech of the piece; and two other seats on the axle, facing toward the muzzle, are occupied in traveling by two cannoneers, one of whom manipulates the lever of the wheel brakes.

The Wheels and Axle.—The axle of forged steel is hollow. The axle arms are given a set so as to bring the lowest spoke of each wheel vertical.

The wheels are a modified form of the Archibald pattern, 56 ins. in diameter with 3-in. tires.

Digitized by Google

The hub consists of a forged steel hub box and hub ring and is assembled to the spokes by bolts through the flanges. A bronze liner forced into the hub box takes the wear on the axle and can be replaced when worn. A hub cap closing the end is fitted with an oil valve which permits of oiling the axle without removing the wheel. The wheel is held on the axle by a bronze yoke at the end, which becomes accessible when the hub cap is removed.

225. The Shield.—The cannoneers serving the piece are protected by a shield of hardened steel .15 of an inch thick. It is in three parts. One part, the apron, depends from the axle and is swung up forward under the cannoneers' seats when traveling. The main shield, rigidly attached to the frame of the carriage, extends upwards from the axle to 4 ins. below the tops of the wheels. The top shield is hinged to the main shield. When raised its upper edge is 62 ins. from the ground, a height sufficient to afford protection from long range and high-angle fire to cannoneers on the trail seats. In traveling the top shield is folded over so that should the carriage turn over on the march the shield is partially protected from injury. Each shield before being attached to the carriage is tested at a range of 100 yards with a bullet from the service rifle. The plate must not be perforated, cracked, broken, or materially deformed in the test.

Sights.—The piece is provided with three different means of sighting. Two fixed sights on the upper element of the gun, Fig. 161, determine a line of sight parallel to the axis, for use in giving general direction to the piece. For more accurate sighting a tangent rear sight and a front sight with crossed wires are provided. They are seated in brackets attached to the cradle. A telescopic panoramic sight is seated on the stem of the tangent sight. This sight is used for direct aiming and for indirect aiming, which consists in pointing the gun by means of a line of sight considerably divergent from the line of fire. By means of the panoramic sight any object in view from the gun may be used as an aiming point.

A range quadrant, seated on the cradle of the carriage, provides the means of determining the elevation in indirect fire.

Digitized by Google

Sights and range quadrant are fully described in later chapters.

The Limber.—The limber, Fig. 164, is practically wholly of metal, the spokes and felloes of the wheels being the only wooden parts. The body of the limber is a steel frame, composed of three rails riveted to lugs formed on the axle and braced by steel tie rods. The middle rail is in the form of a split cylinder, one half passing below the axle and the other above. The halves unite in front, forming a socket for the pole, which is held firmly in place by a clamp. Similarly in the rear the middle rail forms a seat for the pintle hook. The pintle hook is swiveled in its seat, so that if at any time the gun carriage turns over the pintle will turn without overturning the limber as well.

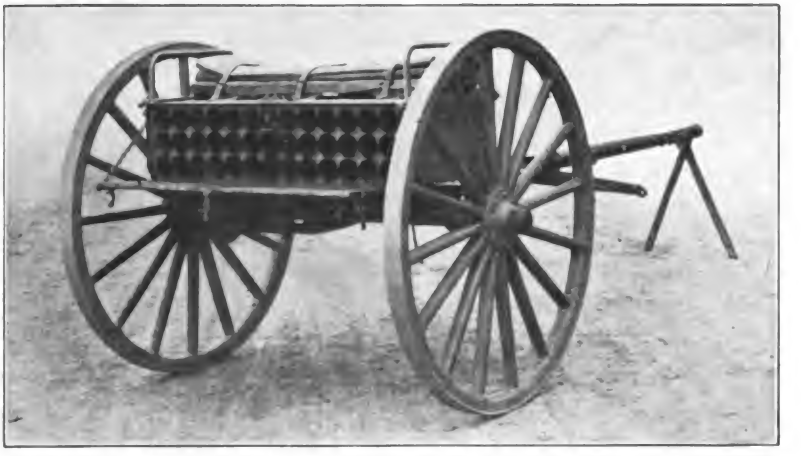

FIG. 164.—3-in. Field Limber.

The ammunition chest, of sheet steel, is fastened to the outer rails. The front of the chest and the door which forms the rear are strengthened by vertical corrugations. The door opens downward and is then supported by chains. The metallic ammunition is supported in the chest by three diaphragms each perforated with 39 holes. The middle and rear diaphragms are connected by flanged brass tubes cut away on top to reduce the weight. The

Digitized by Google

tubes support the front ends of the cartridge cases and enable blank ammunition and empty cases to be carried.

Seats made of sheet steel are provided for three cannoneers on the limber chest, and a steel foot-plate rests on the rails in front of the chest.

The wheels of the limber and the wheels of all other carriages that form part of a field battery are interchangeable with the wheels of the gun carriage.

226. The Caisson and other Wagons.—The construction of the caisson, Fig. 165, does not differ materially from that of the limber.

FIG. 165.—3-in. Field Caisson.

The ammunition chest is larger and carries 70 rounds of ammunition. The front of the chest is of armor plate .15 of an inch thick; and the door at the rear, which opens upward to an angle of about 30° above the horizontal, is of armor plate .15 of an inch thick. A .15-in. plate also depends from the axle as in the gun carriage. The cannoneers serving the caisson are thus afforded protection for a height of 63 ins. from the ground.

Attached to the caisson by a hinged bracket at the rear is an automatic fuse setter, by means of which the cannoneer at the caisson may quickly set the fuse of the projectile to the time of burning corresponding to any range ordered by the battery com-

Digitized by Google

mander. The fuse setter is described in the chapter on primers and fuses.

Three caissons with their limbers accompany each gun into the field.

The wagons of a battery include also the forge limber, which, as its name indicates, carries a blacksmith's forge and set of tools; and the battery wagon, which carries carpenter's and saddler's tools and supplies; materials for cleaning and preservation; spare parts of gun, of carriage, and of harness; tools and implements; miscellaneous supplies and two spare wheels.

A wagon, called the store wagon, is for use in carrying such stores, spare parts, and materials as cannot be carried in the battery wagon.

The 3-in. Field Gun, Model of 1916.—This gun has been designed to secure even greater rapidity and accuracy of fire than the one just described as well as to provide curved and high-angle fire.

The principal points of difference between the new and the older models are as follows:

The new model gun is equipped with a vertically sliding block designed for semi-automatic closing as described in Art. 181. The carriage has a split trail, each half being provided with a driven spade. This gives better support in firing and permits the gun to be given a traverse of 45° on the carriage instead of 8° as in the older model.

The arrangement of the recoil system is different. The single recoil cylinder is mounted above the gun and two spring cylinders are mounted below the gun.

The sight used embodies the principle of the independent line of sight to be described in the chapter on sights.

The gun may be fired at any angle of elevation from $-5°$ to $+65°$.

227. The 4.7-inch Heavy Field Gun.—The gun is similar in construction and in breech mechanism to the 3-in. field gun.

The Carriage.—The carriage is, in general, similar in construction to the 3-in. field carriage. The greater weight of the gun and

Digitized by Google

the increased force of recoil render necessary certain changes in the parts. In the 3-in. carriage the recoil cylinder and counter recoil springs are assembled together in a single cylinder in the cradle. The cradle of the 4.7-in. carriage, Figs. 167, 168 and 169, consists of three steel cylinders bound together by broad steel bands, the middle band provided with trunnions. The middle cylinder contains the mechanism for the hydraulic control of recoil. Each of the outer cylinders contains three concentric columns of coiled springs for returning the gun to battery. The front end of each of the outer two spring columns is connected to the rear end of the next inner column by a steel tube, flanged outwardly at the front end and inwardly at the rear end. A headed rod passes through the center of the inner coil and is fixed to a yoke that is fastened to the lug at the breech of the gun, see Fig. 168. The head of the rod acts on the inner coil only, and the pressure is transmitted through the flanged tubes or stirrups to the outer coils. In this way the springs work in tandem and have a long stroke with short assembled length.

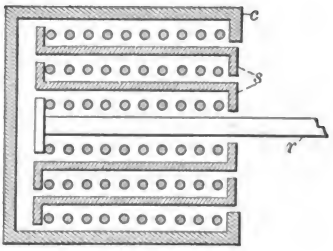

FIG. 166.

The arrangement of the springs will be understood by reference to Fig. 166, in which *r* represents the headed rod, *s* the tubular stirrups, and *c* the walls of the cradle cylinder.

The length of recoil is 66 ins.

The gun is supported, and slides in recoil, on rails *r* fixed on top of the spring cylinders. The distance apart of the rails broadens the bearing of the gun and gives it steadiness both in action and in transportation. An extension piece, bolted to the front end of the cradle and readily detachable, continues the rails to the front clip of the gun. When traveling this extension piece is detached and carried in fastenings under the trail.

The Pintle Yoke.—The cradle is trunnioned in a part called the pintle yoke, *y*, Fig. 167, which is itself pintled in a seat, *p*,

Digitized by Google

called the pintle bearing, mounted between the forward ends of the trail flasks, its rear end embracing the hollow axle *x*. A traversing bracket, *b*, is attached to the bottom of the pintle yoke and extending to the rear under the axle forms a support for the traversing shaft *t* and for the elevating mechanism. The rear end of the traversing bracket slides on supporting transoms between the flasks of the trail, motion being given to the bracket by means of a screw on the traversing shaft which works in a nut suitably

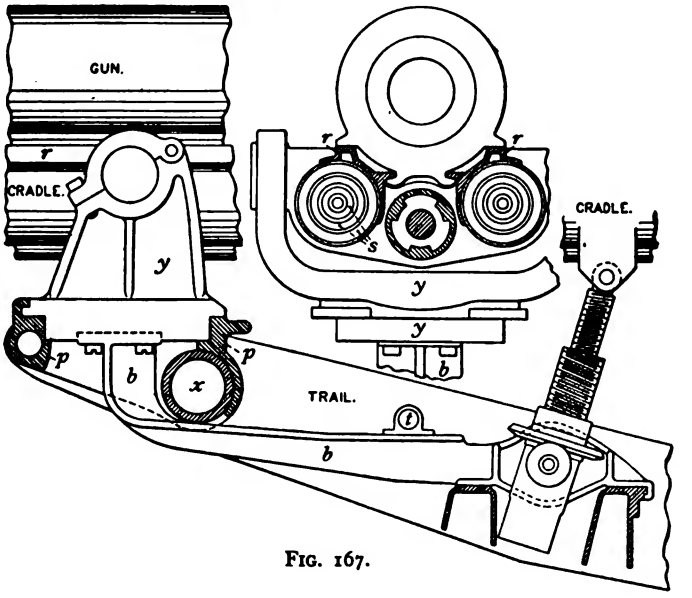

FIG. 167.

attached to the trail. The gun may be moved in azimuth on the carriage 4° either way. The elevating mechanism is carried on the traversing bracket and moves with the gun in azimuth. It is, therefore, not subjected to any cross strains. The gun may be moved in elevation from $-5°$ to $+15°$.

228. The Wheels and the Trail.—The wheels are 60 ins. in diameter with 5-in. tires. Exhaustive tests recently concluded indicate that no practical advantage is gained by the use of wider tires on vehicles of this class and weight.

Digitized by Google

FIG. 168.—4.7-in. Heavy Field Gun, Firing Position.

Digitized by Google

The trail is of the usual construction, two pressed steel flasks of channel section tied together by transoms and plates. The front ends of the flasks are riveted to cast-steel axle bearings which extend to the front of the axle and support between them the pintle bearing *p*. The location of the pintle socket in front of the axle permits the use of a shorter trail and reduces the weight at end of trail to be lifted in limbering.

Bearings are provided at about the middle of the trail, in the opening seen in Fig. 168, for a detachable geared drum which is used in giving initial compression to the counter recoil springs in assembling, and in withdrawing the gun to its traveling position. When not in use the drum is kept in the tool-box in the trail.

The spade with its horizontal floats is hinged to the trail on top. For traveling it is turned up and rests on top of the trail, see Fig. 169; for firing it is turned down. In either position it is locked in place by a heavy key bolt.

A bored lunette plate is riveted to the bottom of the trail, for engagement on the pintle of the limber.

The Limber.—The limber, Fig. 170, is merely a wheeled turntable for the support of the end of the trail in traveling. It has the usual arrangements for the attachment of the team. Its wheels are smaller than those of the carriage to permit turning in a smaller space than if the larger wheels were used. The turntable, shaped to fit the end of the trail, is mounted on a frame fixed to the axle. It forms a seat for the trail. The seat is pivoted at the rear end and its front end rests on rollers which travel on a circular path on the limber. A pintle on the seat engages in the lunette in the bottom of the trail.

When traveling, in order to distribute the weight as evenly as possible between the front and rear wheels of the limbered carriage, the gun is disconnected from the piston rod and spring rods, and drawn back 40 ins. to the rear, Fig. 169. In this position the recoil lug is secured between two stout braces attached to a heavy trail transom. The breech of the gun is thus supported and rigidly held in traveling, and the elevating and traversing mechanisms are

Digitized by Google

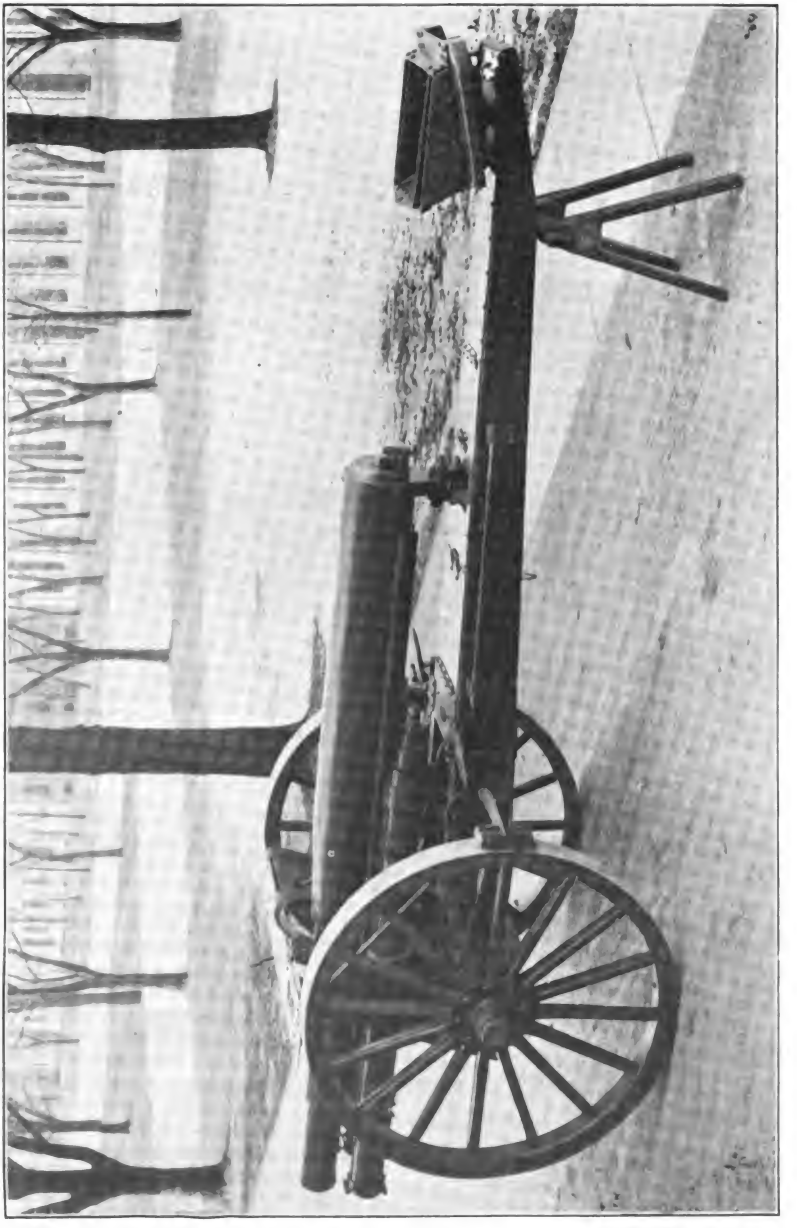

FIG. 169.—4.7-in. Heavy Field Gun, Traveling Position.

Digitized by Google

relieved from all strains. The braces referred to are pivoted in the trail, and when not in use are turned down inside the trail.

4.7 *Gun Limber and Caisson.*—The limber described above is for use with the gun carriage. For carrying ammunition a limber and caisson are provided which are similar in a general way to those provided for the 3-in. field gun. Each is capable of carrying 28 rounds of ammunition.

The front of the caisson box is made of armor plate 0.15 in. thick. The door opening upward is made of the same material, and serves as a top shield, while an apron of the same material

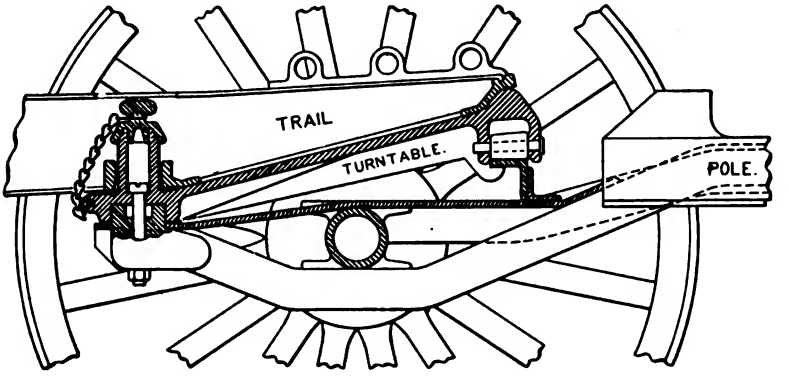

FIG. 170.

hinged at the bottom of the box, can be swung down, thus completing the armored protection.

229. The 6-inch Heavy Field Howitzer.—This is a short piece, 13 calibers long mounted on a wheeled carriage so constructed that the piece can be fired at angles of elevation from $-5°$ to $+40°$. This wide range of elevation on a wheeled mount introduces into the carriage requirements not encountered in the construction of the carriages previously described, which provide for a maximum elevation of 15°.

The body of the piece 1 is made from a single forging. For convenience of manufacture a breech hoop 2, Fig. 174, carrying the

Digitized by Google

recoil lug 3 is shrunk over the rear of the howitzer body. This lug is extended upward and attached to the recoil cylinder 4. Flanged rails 5 formed above the piece support it on the cradle of the carriage, on which the piece slides in recoil.

Cradle.—Top Carriage.—Recoil Springs and Buffer.—The cradle 7 of the carriage is quite similar in shape so that of the field carriage illustrated in Figs. 140 and 141 if the latter be inverted so that the gun is underneath the cradle. The gun is placed underneath the cradle in order to reduce the lever arm, with respect to the rear point of support of the trail, of the force brought upon the carriage by the discharge of the gun. By this means the overturning moment about the end of the trail is so reduced that the carriage is stable under all conditions of loading and elevation. Instead of being pintled in the rocker, however, the cradle is provided with horizontal trunnions 8, Figs. 171 and 173, carried in trunnion bearings 9, in the top carriage 10, which in turn is pintled in the part called the pintle bearing.

The recoil piston 11, and counter-recoil buffer 12, are as shown in Fig. 174, the piston rod being attached to the cradle head 13 at the front end of the cradle; the buffer, by means of a nut-head 14 on the rear end being screwed into the rear head 15 of the recoil cylinder, which is passed through the recoil lug 3 of the gun and is attached thereto by a cylinder retaining ring 16. The piston 11 remains stationary during the recoil of the gun, the cylinder being drawn to the rear with the gun, compressing the recoil springs 17, which surround the recoil cylinder inside the cradle between the rear end of the cradle and the front head of the recoil cylinder. Because of the length of recoil, telescoping springs, which consist of an inner and outer column of concentric springs surrounding the recoil cylinder, have to be used. The front head of the cylinder bears against the front end of the inner spring column; the rear end of the column bears against a stirrup 18, which connects the rear end of the inner spring column to the front end of the outer spring column. The inner spring column and the stirrup, therefore, move partly out of the cradle to the rear during

Digitized by Google

recoil, but the outer spring column, being compressed between the stirrup at the front and the end of the cradle at the rear, does not move out of the cradle. The action of the counter-recoil buffer is the same as that of the 3-in. field carriage.

230. **Traversing Mechanism.**—The pintle bearing 19, Fig. 174, is merely a transverse plate connecting the right and left flasks at the front, a pintle being formed by cutting a circular hole in the plate and flanging the edges at the hole upward. The pintle so formed is then strengthened by shrinking over it a forged steel ring 20. The bottom plate of the top carriage has formed on its under side a similar pintle 21 which projects over the pintle formed on the pintle plate between the flasks, the whole forming a pivot around which the top carriage may rotate in azimuth. The pintle on the top carriage is lined with a bronze ring riveted in place. Clip plates 22 riveted on the top carriage engage under corresponding clips 23, one of which is bolted to the pintle plate at the front and center and the other two of which are riveted at the rear, one on each top flange of the flasks.

Riveted to the left flask is a nut in which a screw works in or out by means of a hand wheel 24, Fig. 173. A link connects this screw to the left side of the top carriage in such a manner as not to prevent rotation of the screw, but to cause the top carriage to rotate around the pintle as the screw is moved in or out of the nut. The top carriage is thus given a movement of 3° in azimuth on either side.

The Rocker.—Elevating Mechanism.—Loading Position.—The function of the rocker is to enable the cradle and the gun to be returned to nearly a horizontal position for loading without interfering in the meantime with the aiming of the piece. The rocker 25 is made in two halves, one on each side of the cradle, joined together by a hollow bar 26, Fig. 174, passing underneath the gun. The halves of the rocker are journaled on the cradle trunnion 8 at the front, and teeth are cut on their lower edges, which edges for this purpose are circular. These teeth engage with corresponding teeth on two pinions attached to a horizontal shaft 27, Fig. 174,

Digitized by Google

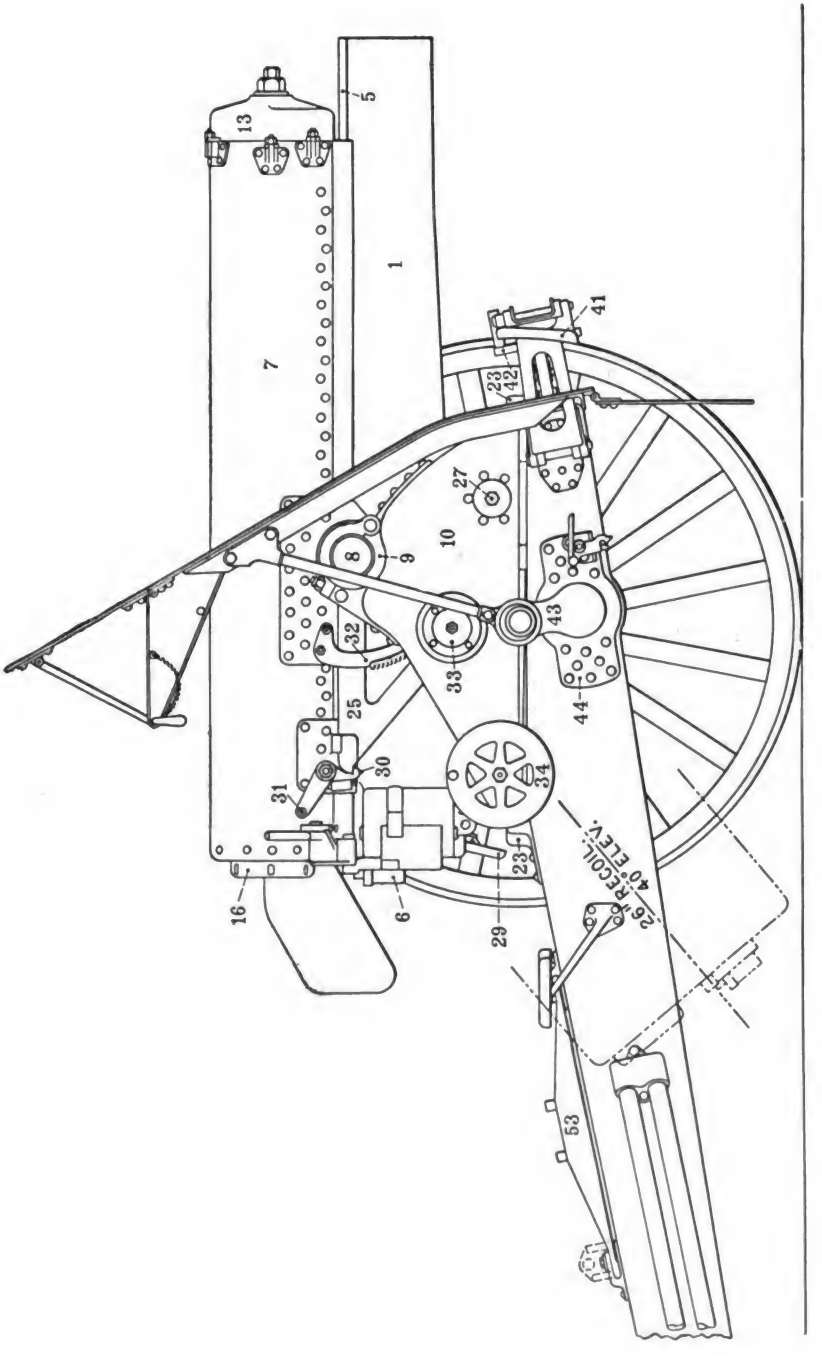

FIG. 171.—Elevation of Right Side.—6-in. Heavy Field Howitzer and Carriage, Model of 1908.

Digitized by Google

passing through the cheeks of the top carriage. This horizontal shaft is geared to an inclined shaft 28, Fig. 173 (also shown in Fig. 172) supported on the outside of the left cheek of the top carriage with a hand-wheel 29 at its rear end near the seat for the gunner. By turning this hand-wheel motion is communicated to the rocker through the gearing so that it may be moved in elevation from $-5°$ to $+40°$. Two hooks, 30, carried on the rear of the cradle, engage with the rear end of the upper arm of each half rocker 25, thus joining the rocker and cradle together when the hooks are engaged. The two hooks are made to work together by a short horizontal shaft connecting them and passing through the cradle. They may be disengaged from the rocker by pushing up on a handle 31, Figs. 171 and 172, on the right side of the cradle, which is attached to the shaft connecting the hooks. When the handle is released the hooks are snapped back in place by springs, provided the cradle and rocker occupy such relative positions that the hooks may engage the rocker. When the hooks are engaged the cradle must travel in elevation with the rocker, but when they are disengaged the cradle and rocker can move separately in elevation.

When the gun is fired at an elevation greater than is convenient for loading without changing the position of the gun, the hooks connecting the rocker and cradle are disengaged and the gun and cradle are brought to a convenient position for loading without disturbing the position of the rocker. Bolted to the right side of the cradle is a toothed arc 32, Fig. 171, which engages with a toothed pinion on a short horizontal shaft carried in bearings 33 in the right cheek of the top carriage. This shaft is connected by gearing to a short inclined shaft also carried in bearings in the right cheek of the top carriage. This shaft lies under the top flange of the cheek and runs downward to the rear, where it is again geared to a short horizontal shaft running through the right cheek of the top carriage with a hand-wheel 34 on its outer end in a convenient position for operation by the cannoneer on the seat on the right side of the trail. When the hooks 30 are released the gun 1 and cradle 7 can be brought to the loading position without disturbing the rocker 25

Digitized by Google

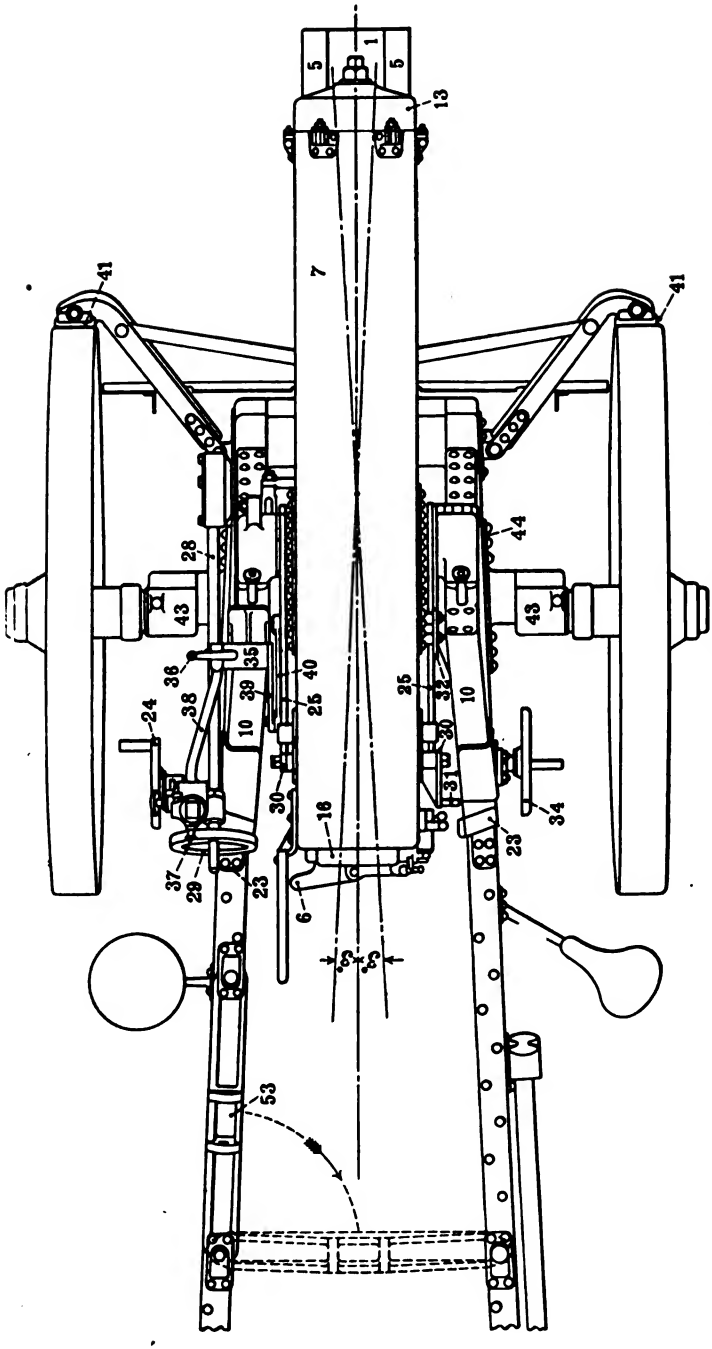

FIG. 172.—Top View—6-in. Heavy Field Howitzer and Carriage, Model of 1908.

Digitized by Google

by turning this hand-wheel. When the gun is loaded the gun and cradle can, by turning this hand-wheel, be again turned to the position where the hooks will engage with the rocker, when gun, cradle and rocker will then have the same elevation whether or not the rocker has been in the meantime moved in elevation by the regular elevating mechanism.

231. **Sights.**—Since movement in azimuth is given by moving the top carriage, which carries the rocker, cradle and gun with it. whatever be the positions of the gun and rocker in elevation, and since the rocker can be changed in elevation while the cradle and gun are disengaged from it with the certainty that when the gun and cradle are moved until the books again engage the rocker, they (gun and cradle) will then have the same elevation as the rocker, it is evident that if the sights are so attached to the carriage that they will follow the top carriage in azimuth and the rocker in elevation, the operation of aiming can be continuously performed without being interrupted when the gun and cradle are moved to the loading position.

A bracket 35, Fig. 173, bolted to the top ñange of the left cheek of the top carriage just in rear of the left trunnion bearing has an arm which carries the front sight 36. The rear sight 37 is carried on an arm 38 which extends to the rear on the left of the top carriage and which is fastened at the front to a pin passing through a horizontal hole in the bracket fastened to the top carriage which carries the front sight. This arm can rotate in a vertical plane around the axis of the pin to which it is attached, but must remain in the vertical plane containing the axes of the top carriage and gun. To make the sight arm 38 follow the rocker 25 in elevation, the inner end of the pin to which the sight arm is fastened is connected by a system of two links, 39, 40, to the rocker so that as the rocker moves in elevation it turns the sight arm around the axis of the pin, keeping the line of sight, when the rear sight is set at 0° elevation and zero deflection, always parallel to the axis of the gun when gun and cradle have been engaged with the rocker by the hooks. The rear sight is similar to that of the 3-in. field carriage. As no range

Digitized by Google

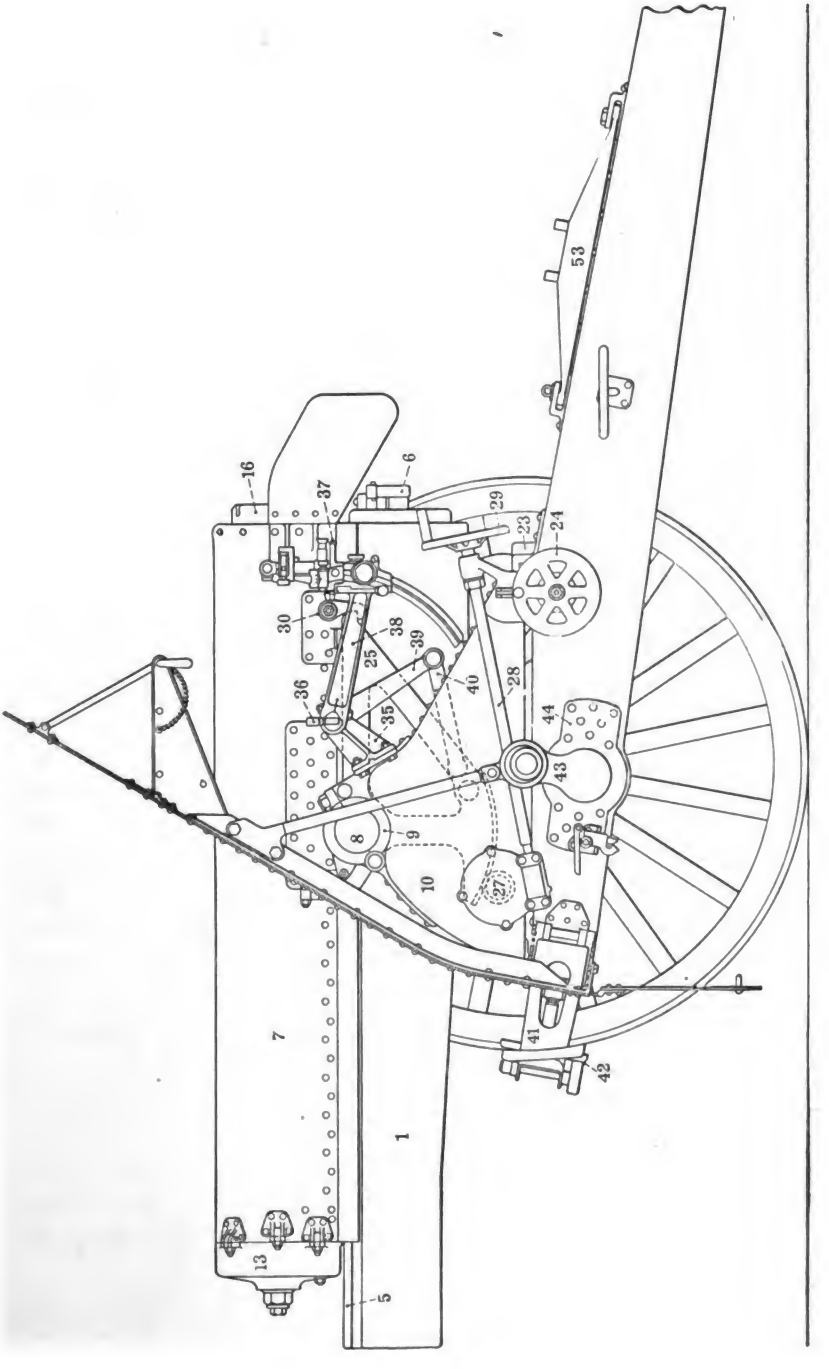

FIG. 173.—Elevation of Left Side—6-in. Heavy Field Howitzer and Carriage, Model of 1908.

Digitized by Google

quadrant is provided for this carriage a clinometer level similar to that on the quadrant of the field carriage is provided on the rear sight. This clinometer level is adjustable for the angle of site or position and when so adjusted the rear sight may be used as a quadrant exactly as is the quadrant of the field carriage, the range being set off on the sight shank and the bubble of the clinometer being brought to its central position by elevating or depressing the rocker through the elevating mechanism.

The Trail.—Axle.—The flasks of the trail extend separately to the rear a sufficient distance to permit between them free movement of the gun in recoil at any elevation. They are then joined by transoms and top and bottom plates, and are terminated in a detachable spade which is secured to the top of the trail when traveling. Sockets are provided for two hand spikes at the end of the trail. Two lifting bars also are fixed to the trail.

The wheel brakes 41 are placed at the front of the wheels in order to provide space in rear for two seats for cannoneers, one on each side of the trail. The brakes are operated by a hand-wheel 42 placed at the center of the carriage just in front of the shield. Two apartments with hinged lids are provided in the trail for the transportation of the sight and tools. To permit of the required movement of the cradle in elevation the axle 43 is made in three parts, the two outside parts being forced over the ends of the middle part and prevented from turning on it by keys and pins. The axle has flanges 44 formed on its outside parts by which it is riveted to the flasks. The rivets also pass through the pintle plate, riveting pintle plate, flasks and axle securely together. When traveling the gun is locked by the front traveling lock 52.

Shield.—This carriage is provided with a shield quite similar to that of the 3-in. field carriage described in Art. 225.

232. Recoil Controlling System.—The automatic shortening of the length of recoil as the elevation increases is produced in the following manner: The recoil cylinder complete consists of three cylinders one within the other. The largest cylinder 4, Fig. 174, is called the outer, the next smaller the inner cylinder 45, and the smallest is

Digitized by Google

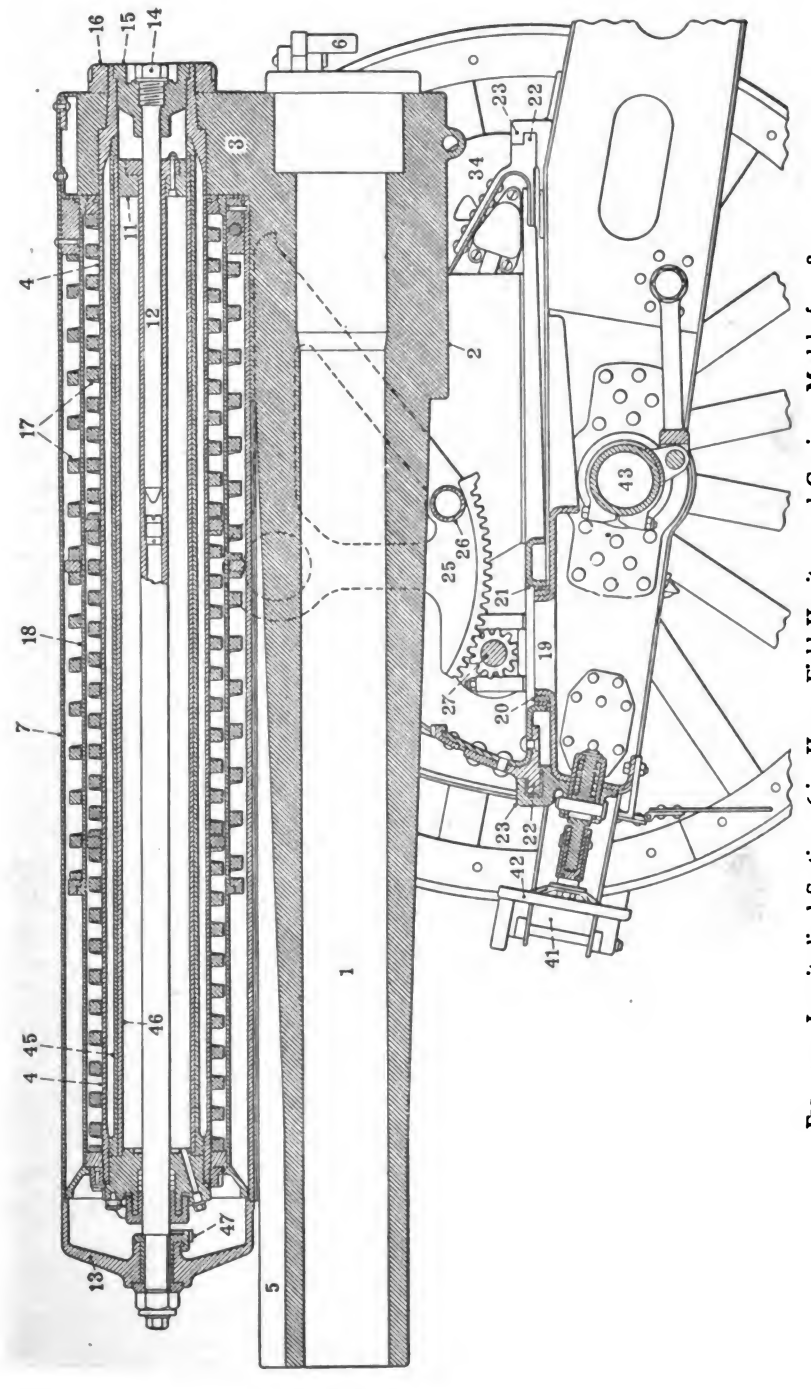

FIG. 174.—Longitudinal Section—6-in. Heavy Field Howitzer and Carriage, Model of 1908.

Digitized by Google

called the valve 46. The inner cylinder and valve are of practically the same length, but the outer cylinder is longer in order to provide for the front and rear cylinder heads and for attachment to the recoil lug of the gun. The inner diameter of the outer cylinder is considerably greater than the outer diameter of the inner, so that a space is left between the two for the passage of oil from front to rear of the piston as will be described. The outer diameter of the valve is practically the same as the inner diameter of the inner cylinder, just enough clearance between the two being allowed to enable the valve to rotate about its axis inside the inner cylinder. The piston 11 is inside the valve and fits closely therein, just enough clearance being allowed to enable the valve to be drawn to the rear over the piston during recoil, the three cylinders then being drawn together to the rear by the recoil lug on the gun while the piston remains stationary, since the piston-rod is secured to the front of the cradle, which does not recoil. The piston is not slotted to enable the oil in the cylinder to pass from front to rear during recoil, but instead, holes are provided in the walls of the valve and inner cylinder through which the oil passes from the part of the valve in front of the piston to the space between the inner and outer cylinders and thence through other holes in the inner cylinder and valve to the inside of the valve behind the piston. For the passage of the oil, the cylinder has only three rows of holes, each of which extends practically the whole length of the cylinder. The valve, however, has 36 rows of holes, the length of the different rows varying from 26 to 63 inches (more exactly, between these distances plus the length of the piston). If the valve be turned inside the inner cylinder until the three rows of holes that are 26 ins. long are opposite the three rows of holes in the inner cylinder, it is obvious that when the gun has recoiled a distance of 26 ins., recoil will cease, for although there are holes in the inner cylinder beyond this point there are no holes in the valve opposite them, so that the oil can no longer pass from in front of the piston to the rear of it. By turning the valve until three longer rows of holes are opposite the holes in the inner cylinder, the length of recoil will be increased and so on, until the greatest length

Digitized by Google

of recoil, 63 ins., is obtained. The total area of holes in front or behind the piston, whichever total area is the smaller, is the controlling area of orifice, and the number and location of the holes in each row of the valve are such as to provide the proper area of orifice at each instant for the length of recoil desired, which corresponds to the length of the rows of holes in the valve that are opposite those of the inner cylinder.

The valve is automatically revolved inside the inner cylinder, when elevation is being given to the rocker, in such a manner that for any given elevation the proper rows of holes in the valve are placed opposite those in the inner cylinder. This is accomplished by the following arrangement of the parts: Three longitudinal grooves are cut in the inner surface of the valve and into them fit three projections from the piston. This permits the valve and the piston to have relative motion in the direction of the axis of the valve, but requires the valve to rotate if the piston be rotated. The piston rod, which projects through the cradle head, is secured thereto by a nut in such a manner that the rod cannot move longitudinally in recoil, but can rotate around its axis. Just in rear of the point where the piston-head passes through the cradle head a toothed sector 47, Fig. 175, is attached to the rod. This sector engages with another 48 on a shaft parallel to the axis of the recoil cylinder and carried in bearings riveted on the inside of the cradle On the rear end of this shaft is fastened a link 49, which projects to the outside through a hole in the cradle and is there attached to another link 50, which is swiveled to a lug 51 on the left cap square of the top carriage. Since the point of attachment of the last link to the top carriage, which does not move in elevation, is not in the axis of the cradle trunnions about which the rocker, cradle and gun rotate in elevation, relative motion between the top carriage and the cradle in elevation will cause the system of links to move in such manner as to rotate the shaft on the inside of the cradle and, through it and the toothed sectors at its front and on the piston rod, to rotate the piston-rod, piston and valve. The length and position of the links and the number of the teeth on the toothed sectors are

Digitized by Google

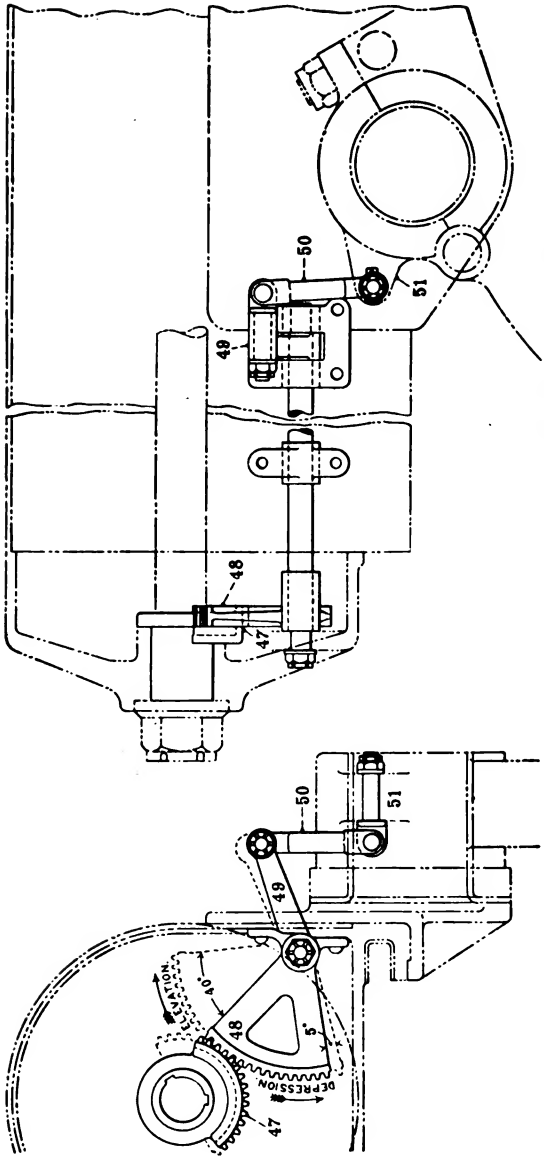

FIG. 175.—Recoil Control System.—6-in. Heavy Field Howitzer Carriage, Model of 1908.

Digitized by Google

such as to cause the valve to rotate through the proper angle to produce the length of recoil desired for any given elevation.

233. Breech Mechanism.—Firing Mechanism.—The breech mechanism and the firing mechanism of the 6-in. howitzer are similar to those of the 3-in. field gun described in Arts. 222 and 223 of the text except that the operating lever 6 of the breech mechanism is above the axis of the howitzer and the trigger shaft of the firing mechanism extends diagonally upward toward the right side of the cradle instead of downward as in the case of the field gun. At the upper end of the trigger shaft are two levers at right angles to each other, one provided with an eye for the hook of the lanyard and the other acted upon by a lever forming part of the firing mechanism mounted upon the rear of the right-hand side of the cradle. This firing mechanism is operated by a firing handle mounted on the cradle and is so arranged that when the handle is released after firing the howitzer, all the parts are required by the action of springs immediately to return to their original positions ready for firing again by a pull on the firing handle.

A loading tray of cast steel for the protection of the threads of the breech during loading remains permanently in the breech. When the block is entered and rotated the tray is pushed aside by the threads on the block until it partially covers two of the slotted sectors and exposes the threaded sectors for engagement with those of the block. When the block is withdrawn the tray slides down to the bottom of the breech, in which position it protects the two threaded sectors near the bottom of the breech.

The cradle, top carriage, pintle plate, brake beams and spade are built up of rolled steel plates stiffened where necessary by forgings or castings and having the necessary brackets, clips, etc., made of forgings or castings riveted or bolted thereto. The rocker is of forged steel.

Traveling Position.—When traveling the gun is drawn back and fastened to the rear traveling lock, 53, Figs. 171 and 172.

234. Other Howitzers.—The 3.8-in. and 4.7-in. howitzers given in the table in Art. 220 are of the same general design as the

Digitized by Google

6-in. howitzer just described. The 3-in. mountain howitzer will have many of the features of the new 3-in. field gun, a general description of which was given in Art. 226.

By reference to the table in Art. 220, it will be seen that the muzzle velocities of all the howitzers is 900 ft. per sec., and that their maximum ranges are very much less than those of the guns of equal mobility.

To overcome this defect later models of these howitzers will be made longer and with larger powder chambers, thus permitting muzzle velocities of 1300 ft. per sec. to be obtained with the weights of projectiles given in the table.

To still further increase the maximum ranges lighter projectiles, weighing three-fourths as much as those given in the table, will be used in these new model howitzers for the outer zones.

Howitzers of Larger Caliber.—The 6-in. howitzer is about the largest which can be effectively transported by horse power. Also, its weight is about the greatest which can be moved over ordinary country road bridges without reenforcing them. However, the necessity for the more effective fire of larger caliber howitzers exists, and they will be provided, the calibers and weights of projectiles following the law of multiples as in the table previously given.

It is at present contemplated to furnish the following sizes of large-caliber field howitzers:

Caliber.	Weight of Projectile.
9.5 in.	480 lbs.
12.0 in.	700 lbs.

A 7.6-in. howitzer with a weight of projectile of 240 lbs. has also been designed and is under test.

All these howitzers will be fired from their own wheeled carriages, which will be of the same general design as that for the 6-in. howitzer. Transportation will be by motor tractor.

Some of the 9.5 howitzers will also be mounted on carriages of the platform type, arranged to be dismounted and divided into

Digitized by Google

several loads for transportation on motor trucks. Lighter loads are thus secured.

235. Armored Motor Cars.—Armored motor cars are in process of evolution. Two types seem likely to develop. The first will be a light and very speedy type, armed only with machine guns and equipped with light armor of sufficient resistance to stop small arms bullets or shrapnel balls.

While the main purpose of this car will be for scouting, it may in certain cases be used for purposes of offense.

The second will be a heavier car equipped with a 6-pounder or heavier gun, as well as machine guns. This car will be more completely and rather more heavily armored than the preceding.

The guns on both cars will be mounted so as to be effective against air craft.

In addition to the above a third car of a much heavier type is being used, under the name of "tank," in trench fighting in the present war. It has caterpillar wheels which allow it to pass over any ordinary obstruction. It is equipped with machine guns and with heavier armor than the ordinary armored car.

Trench Mortar.—This is a small, smooth-bore, muzzle-loading mortar, used for throwing bombs at targets ranging up to 500 yds. The bomb used is provided with a stem which enters the muzzle of the mortar and carries the powder propelling charge. High explosive is used as a filling charge for the bomb. The weight of the bomb may be as great as that of the mortar.

The trench mortar is mounted in trunnion beds in a simple carriage not provided with a recoil brake. The range is usually varied by changing the elevation.

236. Subcaliber Tubes.—For the purpose of enabling troops to become familiar with the operation of the guns and carriages by actual firing, yet without the expense attendant upon the use of the regular ammunition, there are provided for use inside the various service guns smaller guns or gun barrels called subcaliber tubes. These are seated in the bores of the larger guns in such position that the breech of the subcaliber tube is just in front of

Digitized by Google

the breech block of the gun when closed. The subcaliber tube is loaded with fixed ammunition arranged to be fired by the firing mechanism of the larger gun. Three calibers of subcaliber tubes are provided: One of 0.30-in. caliber, using the small-arm cartridge, for guns that use fixed ammunition; one of 1.475-in. caliber, using 1-pounder ammunition, for use in all guns 5 ins. or more in caliber and field guns and howitzers 3 ins. or more in caliber. Subcaliber tubes of this caliber are adapted for use in guns using fixed ammunition as well as in those using separate loading ammunition; and one of 75 mm. (2.95 ins.) caliber, using 18-pounder ammunition, for use in the 12-in. mortar.

For those guns that use fixed ammunition, the *30-caliber subcaliber tube*, a 30-caliber rifle barrel, is fixed in a metal mounting that has the shape and dimensions of the complete cartridge used

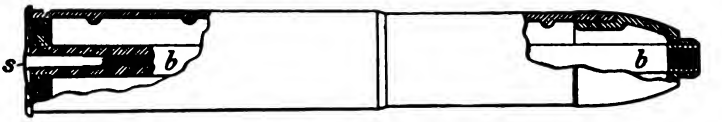

FIG. 176.

in the piece. Fig. 176 shows the subcaliber tube for the 3-in. rifle.

The .30-caliber small-arm cartridge is inserted in the barrel *b* and is fired by the percussion firing mechanism of the piece. It is extracted, far enough to be grasped by the hand, by the extractor, two bowed springs *s* which are under compression when the small-arm cartridge is forced to its seat by the breech block of the gun. A special primer is used in the small-arm cartridge, strong enough to withstand without puncture the heavy blow of the firing pin of the gun.

The head of the subcaliber cartridge is permitted longitudinal movement in the body in order to allow for expansion of the .30-caliber barrel in firing.

The 1-pounder tube is provided with different fittings to adapt it to the particular gun in which it is to be used. It is fitted in the

Digitized by Google

gun in the manner shown in Fig. 177, which represents the 75 mm. subcaliber tube in the 12-in. mortar.

The 75-mm. tube is a gun similar to the mountain gun, without its breech mechanism. The cartridges for the mountain gun are used in it.

The wheel-shaped fittings, called adapters, are screwed on the gun. The front adapter fits against the centering slope in the bore for the band of the projectile. The outer rim of the rear adapter is cut through at the top and the rim is expanded against the sides of the bore by the wedge *w*, which is forced between the parts of

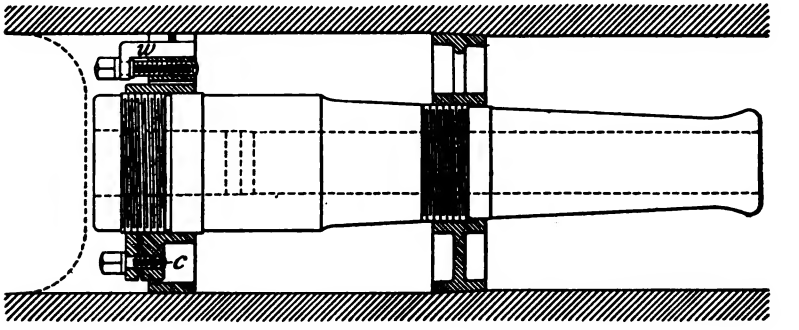

FIG. 177.

the rim by means of the screw seated in one of them. The tube is prevented from turning in the adapters by the clamp screw *c*.

The firing mechanism of the separate loading guns in which the two larger subcaliber tubes are used is not of the percussion type. The cannon cartridges used in these two tubes are therefore provided with the 110-grain igniting primer, described in the chapter on primers, in place of the usual percussion primer. The igniting primer in the cartridge is ignited by the flame from the ordinary primer seated in the rear end of the breech mechanism of the gun.

Drill Cartridges and Projectiles.—For ordinary use at drill, without firing, dummy cartridges are provided for guns that use fixed ammunition, and dummy projectiles and powder charges for

Digitized by Google

other guns. The dummies have the dimensions and weights of the parts they represent.

The drill cartridges for guns using fixed ammunition are hollow bronze castings, Fig. 178, of the shape of the service cartridge loaded with shrapnel. For the instruction of cannoneers in fuse

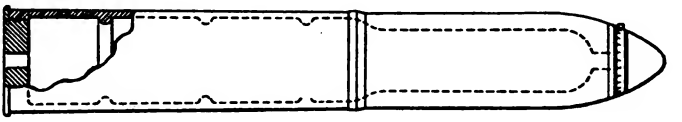

Fig. 178.

setting there is fitted at the head of the cartridge a movable ring graduated in the same manner as the time scale on the combination time and percussion fuse.

Drill projectiles, for guns separately loaded, are of the construction shown in Fig. 179. A bronze band, *b*, is inset at the bourrelet to prevent wearing of the rifling in the gun by frequent

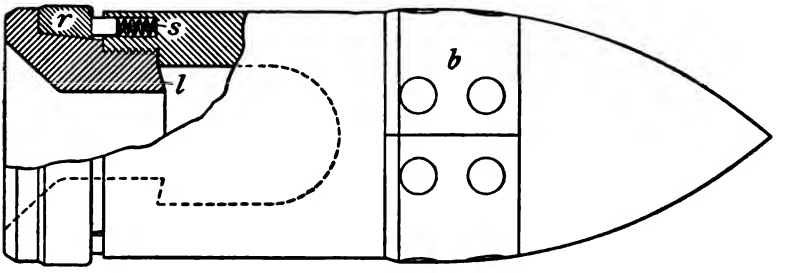

Fig. 179.

insertion of the projectile. The rotating band *r*, made in two or more sections with spaces between, is pressed to the rear on a sloping seat by springs *s*. When the projectile is rammed with force into the gun the band is likely to stick in its seat and thus to resist efforts to withdraw the projectile. The method of attachment of the band is for the purpose of affording a means of readily overcoming this resistance. The extractor, a hook on the end of a pole,

Digitized by Google

is engaged over the inner lip *l*. A pull on the pole will, if the band is stuck, first move the remainder of the projectile to the rear until it strikes and dislodges the band.

Dummy Powder Charges.—To complete the equipment for drill, dummy powder charges, made up of blocks of wood of the same size and shape as the grains of the charges they represent, are made up in bags similar to those shown in Fig. 17.

Digitized by Google

CHAPTER IX

EXTERIOR BALLISTICS*

237. Definitions.—Exterior Ballistics treats of the motion of a projectile after it has left the piece.

In the discussions the dimensions of the gun are considered negligible in comparison with the trajectory.

The Trajectory *bdf*, Fig. 180, is the curve described by the center of gravity of the projectile in its movement.

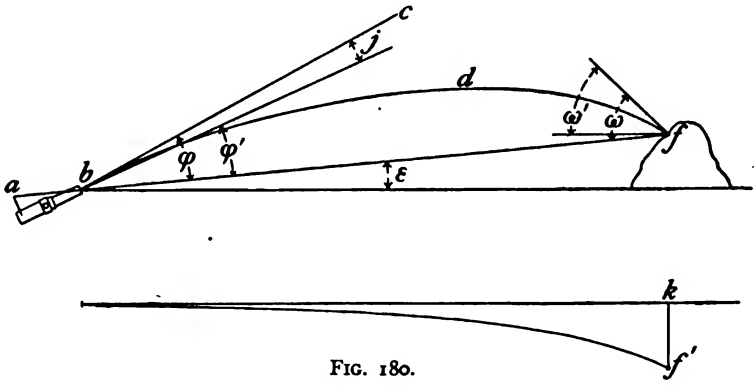

FIG. 180.

The Range, *bf*, is the distance from the muzzle of the gun to the target.

The Line of Sight, *abf*, is the straight line passing through the sights and the point aimed at.

The Line of Departure, *bc*, is the prolongation of the axis of the bore at the instant the projectile leaves the gun.

* The first part of this chapter is a reprint, with minor changes, of a pamphlet on exterior ballistics prepared by Lt. Col. Edward P. O'Hern, Ord. Dept., in 1909.

Digitized by Google

The Plane of Fire, or Plane of Departure, is the vertical plane through the line of departure.

The Angle of Site, ϵ, is the angle made by the line of sight with the horizontal.

The Angle of Departure, ϕ, is the angle made by the line of departure with the line of sight.

The Quadrant Angle of Departure, $\phi + \epsilon$, is the angle made by the line of departure with the horizontal.

The Angle of Elevation, ϕ', is the angle between the line of sight and the axis of the piece when the gun is aimed.

The Jump is the angle j through which the axis of the piece moves while the projectile is passing through the bore. The movement of the axis is due to the elasticity of the parts of the carriage, to the clearances in the trunnion beds and other bearings of the carriage, and in some cases to the action of the elevating device as the gun recoils. The jump must be determined by experiment for the individual piece in its particular mounting. It usually increases the angle of elevation so that the angle of departure is greater than that angle.

The Point of Fall, or Point of Impact, is the point at which the projectile strikes.

The Angle of Fall, ω, is the angle made by the tangent to the trajectory with the line of sight at the point of fall.

The Striking Angle, ω', is the angle made by the tangent to the trajectory with the horizontal at the point of fall.

Initial Velocity is the velocity of the projectile at the muzzle.

Remaining Velocity is the velocity of the projectile at any point of the trajectory.

Drift, kf', is the departure of the projectile from the plane of fire, due to the resistance of the air and the rotation of the projectile.

As far as concerns the equations to be used in the work of exterior ballistics, all trajectories may be placed in one of the following two classes:

Direct Fire, which pertains to small angles of departure, usually not above 15°.

Digitized by Google

Curved Fire, which pertains to all angles of departure greater than about 15°. This class embraces so-called High-angle Fire.

Curved Fire is generally limited in practice to velocities lower than those used in Direct Fire.

For convenience of discussion curved fire will be considered as firings with elevations between 15° and 40° and high-angle fire as firings with elevations above 40°.

238. The Motion of an Oblong Projectile.—The projectile as it issues from the muzzle of the gun has impressed upon it a motion of translation and a motion of rotation about its longer axis. The guns of our service are rifled with a right-handed twist, and the rotation of the projectile is, therefore, from left to right when regarded from the rear. After leaving the piece the projectile is a free body acted upon by two extraneous forces, gravity and the resistance of the air.

When the projectile first issues from the piece, its longer axis is tangent to the trajectory. The resistance of the air acts along this tangent, and is at first directly opposed to the motion of translation of the projectile.

The longer axis of the projectile being a stable axis of rotation tends to remain parallel to itself during the passage of the projectile through the air, but the tangent to the trajectory changes its inclination, owing to the action of gravity. The resistance of the air, acting always in the direction of the tangent, thus becomes inclined to the longer axis of the projectile, and in modern projectiles its resultant intersects the longer axis at a point in front of the center of gravity.

In Fig. 181, G being the center of gravity, and ρ the resultant resistance of the air, this resultant acts with a lever arm l, and tends to rotate the projectile about a shorter axis through G perpendicular to the plane of fire.

The resultant effect of the resistance of the air on the rotating projectile is a precessional movement of the point of the projectile to the right of the plane of fire. After the initial displacement of the point to the right the direction of the resultant resistance

Digitized by Google

changes slightly to the left with respect to the axis of the projectile and produces a corresponding change in the direction of the precession, which diverts the point of the projectile slightly downward.

If the flight of the projectile were continued long enough the point would describe a curve around the tangent to the trajectory; but actually the flight of the projectile, except in mortar firings at angles of elevation exceeding about 66°, is never long enough to permit more than a part of this motion to occur.

The precession of the point is greater as the initial energy of rotation is less. It is, therefore, necessary to give to the projectile sufficient energy of rotation to make the divergence of the point

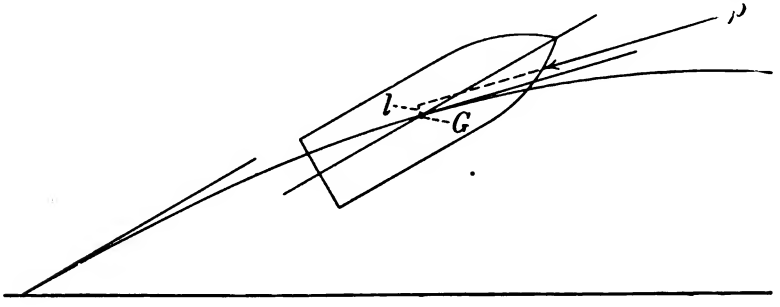

FIG. 181.

small. Otherwise the precessional effect may be sufficient to cause the projectile to tumble.

When the point of the projectile leaves the plane of fire the side of the projectile is presented obliquely to the action of the resistance of the air, and a pressure is produced by which the projectile is forced bodily to the right out of the plane of fire. It is to this movement that the greater part of the deviation of the projectile is due.

Drift.—The departure of the projectile from the plane of fire, due to the causes above considered, is called drift.

It may be shown analytically that the drift of the projectile increases more rapidly than the range. The trajectory is, therefore, a curve of double curvature, convex to the plane of fire.

Digitized by Google

The trajectory ordinarily considered is the projection of the actual curve upon the vertical plane of fire. This projection so nearly agrees with the actual trajectory that the results obtained are practically correct; and the advantage of considering it, instead of the actual curve, is that we need consider only that component of the resistance of the air which is directly opposed to the motion of translation.

239. Determination of the Resistance of the Air.—The relation between the velocity of a projectile and the resistance opposed to its motion by the air has been the subject of numerous experiments. The usual method has been to determine the loss of velocity over a known path. By equating the corresponding loss of energy with the product of the resistance times the path the value of the resistance has been determined.

Thus let

w = weight of projectile in lbs.;
m = mass of projectile = w/g;
d = diameter of projectile in inches;
v_1 = velocity of projectile at beginning of measured path;
v_2 = velocity of projectile at end of measured path;
s = distance in feet between points of measurement of v_1 and v_2;
ρ = resistance of air in lbs.;
$R = \frac{\rho g}{w}$ = retardation due to air resistance.

Then

$$\rho s = \frac{mv_1^2}{2} - \frac{mv_2^2}{2} \quad . \quad . \quad . \quad . \quad . \quad . \quad . \quad (1)$$

Whence

$$R = \frac{(v_1^2 - v_2^2)}{2s} . \quad . \quad . \quad . \quad . \quad . \quad . \quad . \quad (2)$$

In order that the computed values of R may be accurate the distance s must be so short that ρ may be considered as uniform over that path.

Digitized by Google

Early investigators, such as Robins in 1742 and Hutton in 1790, determined the values of v_1 and v_2 by means of a ballistic pendulum placed at varying distances from the gun. Later investigators have used electro-ballistic instruments, the improvements in which have steadily increased the accuracy of the determinations. The latest forms of instruments and methods of measuring velocities have already been described. Much data has been secured concerning various projectiles under various atmospheric and other conditions. How these results have been standardized and made applicable to other projectiles and other atmospheric conditions will be explained in the discussion of the so-called Ballistic Coefficient.

Mayevski's Formulas for the Resistance of the Air.—The values used in our present ballistic tables were derived by General Mayevski from Krupp firings made at Meppen about 1881. In expressing the relation between the resistance of the air and the velocity of the projectile, General Mayevski assumed that the resistance encountered by a given projectile under given atmospheric conditions varied as some power of the velocity, the law of retardation being expressed by the equation

$$R=\frac{A_n v^n}{C}. \quad . \quad . \quad . \quad . \quad . \quad . \quad . \quad . \quad (3)$$

In which

R = retardation to be determined experimentally as per equation (2);

C = ballistic coefficient varying inversely as the retardation. An equation from which C can be calculated will be given later;

n = some power of the velocity;

A_n = a corresponding constant, n and A_n to be determined from Eq. (3) after substituting the values of v, R and C.

The following values of A_n and n were thus determined by Mayevski and by Zabudski.

Digitized by Google

Velocities f. s.	n	log A	Velocities f. s.	n	log A
Below 790	2	5.66989–10	1370 to 1800	2	6.11926–10
790 to 970	3	2.77344–10	1800 to 2600	1.7	7.09620–10
970 to 1230	5	6.80187–20	above 2600	1.55	7.60905–10
1230 to 1370	3	2.98090–10			

It will be noted that the values of the log A_n taken in connection with the corresponding values of v_n are such as to make the values of R plotted as a function of v form practically a smooth curve.

More recent firings by the Gavre Commission in France have shown that the above values of A_n and n are not strictly accurate, but no ballistic tables of greater accuracy have yet been computed. It now appears that the law of the air resistance is intimately connected with the velocity of sound and that Newton's Law of the Square is in the main true.

240. The Ballistic Coefficient.—In Mayevski's expression for R, Eq. (3), he assumed

$$C = \frac{\delta_1}{\delta} \frac{w}{cd^2}, \quad \ldots \ldots \quad (4)$$

in which

δ_1 = standard density of air, that is with barometer 760 mm., thermometer 15° C., relative humidity 1/2;
δ = density of atmosphere at time of experiment;
c = coefficient of form. A general expression for its value will be deduced later;
w = weight of projectile in pounds;
d = diameter of projectile in inches.

The value of δ_1/δ for any weather conditions may be obtained from Table XIV at the end of this book, or from Table VI of Artillery Circular M, with the barometer and the thermometer readings as arguments.

It is evident from Eq. (3) that $A_n v^n$ is directly equal to R only when $C = 1$. That is, the tabulated values of $A_n v^n$ and their derived functions are based on the retardation encountered by a

Digitized by Google

projectile of one pound weight, since $w=1$; of 1 in. diameter, since $d=1$; of standard form, since $c=1$; moving in an atmosphere of standard density, since $\delta_1/\delta=1$. It then becomes evident that C is the factor by means of which the values of $A_n v^n$ are made applicable to projectiles and atmospheric conditions which differ from these standards. A thorough understanding of C is of such fundamental importance that the meaning and use of the factors already appearing and certain others to be introduced later will now be fully considered. It will be noted that C varies inversely as the retardation and hence measures the ability of the projectile to maintain its velocity. Since the weight of air to be displaced by a projectile per unit of travel will vary directly as the density of the air and as the area of cross-section of the projectile, the retardation will vary directly as these factors. We accordingly find δ/δ_1 and d^2 as inverse factors in the expression for C. Every factor but d^2 has disappeared from the ratio of the areas, $\pi d_1^2/\pi d^2$, because the diameter of the standard projectile, d_1, was assumed as one inch.

Since the retardation of a projectile acted upon by a given force will vary inversely as the weight of the projectile, w will enter as a direct factor in the expression for C.

The factor c, called the coefficient of form, is habitually determined by experiment.

The following formula gives its values for an ogival head:

$$c=\frac{2k}{n}\sqrt{\frac{4n-1}{7}}, \quad \ldots\ldots\ldots \quad (5)$$

in which

n = radius of ogive in calibers;

k = a constant which is ordinarily unity, but which is determined experimentally and thus compensates for peculiarities of conformation not attributable to the radius of the ogive. For $k=1$ and $n=2$, the value formerly in general use in the U. S. Service, $c=1$.

With the sharp-pointed projectiles now in use $n=7$ and $c=0.561$.

Digitized by Google

241. The Altitude Factor.—We have thus far assumed the projectile to be moving in an atmosphere of uniform density. But we know that, as the projectile rises above the level of the gun, the density of the atmosphere diminishes, obeying the barometric law. We must, accordingly, multiply δ_1/δ by such a factor as will reduce the value of δ to that of the mean density encountered by the projectile in its flight. This factor is designated f_a.

The following are the equations from which it may be computed:

For direct fire and moderately curved fire

$$f_a = 1 + .00002 y_0. \quad \ldots \quad (6)$$

For greatly curved and high-angle fire

$$f_a = \frac{1}{1 - .000027h}, \quad \ldots \quad (7)$$

in which

y_0 = maximum ordinate of trajectory in feet;
h = mean height of trajectory in feet.

The necessity for two formulas is due to the fact that the mean height of the trajectory in high-angle fire cannot, without material error, be assumed as 2/3 the maximum ordinate, as is done in the other case. It is unnecessary to use the factor f_a for trajectories when the time of flight is less than 4 seconds, since it is only at about that value that it becomes large enough to cause a variation of .001 in the value of δ_1/δ.

The Wind Factor.—A wind component in the direction of the line of fire increases or diminishes the amount of air to be displaced by the projectile per unit of distance and hence changes the resistance encountered. Its effect may then be compensated for by the introduction of a suitable factor in the value of C. Its value is

$$f_w = 1 \pm \frac{2W_x T^{5/4}}{X}, \quad \ldots \quad (8)$$

Digitized by Google

in which

W_x = range component of wind in miles per hour, positive if a rear wind, negative if a head wind;
T = time of flight in seconds;
X = range in feet.

242. The Reducing Factor.—Heretofore we have considered the resistance of the air without specific regard to variations in the length of the projectile and the resultant variations in the amount of surface obliquely presented to the air and in the speed with which the axis of the projectile adapts itself to the curvature of the trajectory. From an analysis of the results of firings with the 3-in. field-gun and various sea-coast guns Col. Alston Hamilton has deduced an empirical formula for a factor γ to be added in certain cases to the ballistic coefficient to make the computed ranges agree with the actual ones.

The value of this factor as deduced for shrapnel and capped projectiles in direct fire is,

$$\gamma = \frac{d^3}{2w}\left\{1 + \frac{\phi + \omega}{135}\right\}, \quad \ldots\ldots\ldots \quad (9)$$

in which

d = diameter of projectile in inches;
w = weight of projectile in pounds;
ϕ = angle of departure in degrees;
ω = angle of fall in degrees.

The $d^3/2w$ part of this factor corrects for differences in cubic density and the part within the parenthesis, sometimes designated γ', corrects for variations in the total curvature of the trajectory.

The value of the reducing factor for high-angle fire with capped projectiles has been experimentally determined to be,

$$\gamma = \frac{1}{\cos \phi}. \quad \ldots\ldots\ldots \quad (9\text{-A})$$

The Integrating Factor.—In performing one of the integrations involved in the deduction of the equations of exterior ballastics

Digitized by Google

(see Art. 244), it is necessary to make an approximation that introduces an error which is negligible in direct fire but which becomes appreciable in curved and high-angle fire. This error is corrected by the introduction into the Ballistic Coefficient of an integrating factor.

$$\beta = \sqrt{1 + .4 \tan^2 \phi}, \quad . \quad . \quad . \quad . \quad . \quad . \quad . \quad (10)$$

in which ϕ is the angle of departure.

This factor may be considered unity for direct fire, but its value varies appreciably from unity in curved and high-angle fire.

The completed ballistic coefficient thus becomes,

$$C = \frac{\delta_1}{\delta} f_a f_w \frac{w}{\beta c \gamma d^2}. \quad . \quad . \quad . \quad . \quad . \quad . \quad . \quad (11)$$

The formulas given above for computing the various factors entering the second member of this equation are the work of Lt. Col. Alston Hamilton, Coast Artillery Corps, in whose work on Exterior Ballistics their deduction will be found.

Range Table Value of C.—Range table values of the angle of departure, the range, the time of flight, etc., are computed under the assumption of no wind and normal atmospheric conditions. The value of C for range table conditions thus becomes

$$C = f_a \frac{w}{\beta c \gamma d^2}. \quad . \quad . \quad . \quad . \quad . \quad . \quad . \quad (12)$$

243. Trajectory in Air. Ballistic Formula.—In the deduction of the ballistic formulas the trajectory is considered as a plane curve. The line of sight is taken as horizontal. The angle of elevation is taken as the angle of departure and the striking angle becomes the angle of fall.

The trajectory so considered is called *The Horizontal Trajectory.*

Considering the motion of translation only, and that the resistance of the air is directly opposed to this motion, let, Fig. 182,

Digitized by Google

R, be the retardation due to the resistance of the air, its value being given by Eqs. (2) and (3);

V, the initial velocity;

v, the velocity at any point of the trajectory whose coordinates are x and y;

v_1, the component of v in the direction of x;

ϕ, the angle made with the horizontal by the tangent to the trajectory at the origin, or the angle of departure;

θ, the value of ϕ for any other point of the trajectory;

ω, the angle of fall;

x and y, the coordinates of any point of the trajectory, in feet;

X, the whole range, in feet.

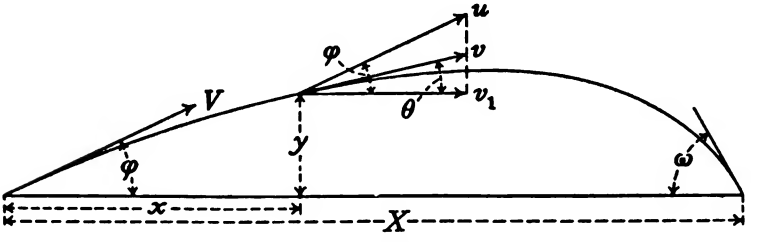

FIG. 182.

Differential Equations of Motion.—The only forces acting on the projectile after it leaves the piece are the resistance of the air and gravity.

The resistance of the air is directly opposed to the motion of the projectile, and continually retards it. Gravity retards the projectile in the ascending portion of the trajectory, while it accelerates it in the descending portion.

Considering the ascending portion of the trajectory, the velocity in the direction of x is

$$v \cos \theta = v_1 = \frac{dx}{dt} \qquad dx = v_1 dt \quad . \quad . \quad . \quad . \quad (13)$$

Digitized by Google

The velocity in the direction of y is

$$v \sin \theta = v_1 \tan \theta = \frac{dy}{dt} \qquad dy = v_1 \tan \theta \, dt \quad . \quad . \quad (14)$$

The retardation in the direction of y, as obtained from Eq. (14), is then equal to the retardation due to gravity plus the vertical component of the retardation due to the air resistance. Hence,

$$-\frac{d(v_1 \tan \theta)}{dt} = g + R \sin \theta. \quad . \quad . \quad . \quad . \quad . \quad . \quad (15)$$

Since gravity has no component in a horizontal direction, the retardation in the direction of x is,

$$-\frac{dv_1}{dt} = R \cos \theta \qquad dt = -\frac{dv_1}{R \cos \theta}. \quad . \quad . \quad . \quad (16)$$

Substituting this value of dt in (13), (14), and (15), and performing the differentiation indicated in (15), $d \tan \theta$ being $\frac{d\theta}{\cos^2 \theta}$ we obtain from (13) and (16),

$$dx = -\frac{v_1 dv_1}{R \cos \theta}; \quad . \quad . \quad . \quad . \quad . \quad . \quad . \quad . \quad (17)$$

from (14) and (16),

$$dy = -\frac{v_1 \tan \theta dv_1}{R \cos \theta}; \quad . \quad . \quad . \quad . \quad . \quad . \quad . \quad (18)$$

from (15) and (16),

$$d\theta = \frac{g \cos \theta dv_1}{R v_1}. \quad . \quad . \quad . \quad . \quad . \quad . \quad . \quad . \quad (19)$$

The four Eqs. (16) to (19) are the differential equations of motion of the projectile, and if they could be integrated directly they would give the values t, x, y, and θ, for any point of the trajectory. But as they are expressed in terms of R, v, and θ, three independent variables, the direct integration is impossible.

Digitized by Google

244. Solution of Equation.—The value of R is given by Mayevski's formula, $R = A_n v^n / C$, n representing the exponent of v for any particular velocity. Substituting this value of R in (17), the equation may, by means of the relation $v \cos \theta = v_1$, be put in the form

$$dx = -\frac{C \cos^{n-1}\theta dv_1}{A_n {v_1}^{n-1}}. \quad . \quad . \quad . \quad . \quad . \quad (20)$$

The second member would be an exact integral were it not for the factor $\cos^{n-1}\theta$. In direct fire $\cos\theta$ differs but little from unity, and it might be taken as unity without appreciable error; $\cos^{n-1}\theta$ would then be unity and the expression would be integrable. A closer approximation, however, as shown by Siacci, results from making

$$\cos^{n-1}\theta = \cos^{n-2}\phi. \quad . \quad . \quad . \quad . \quad . \quad . \quad (21)$$

Making this substitution Eq. (20) may be brought by reduction to the form

$$dx = -\frac{C}{A_n} \frac{d(v_1 \sec \phi)}{(v_1 \sec \phi)^{n-1}}. \quad . \quad . \quad . \quad . \quad (22)$$

Since

$$\cos^{n-2}\phi = \frac{1}{\sec^{n-2}\phi} = \frac{\sec \phi}{\sec^{n-1}\phi}, \quad . \quad . \quad . \quad . \quad (23)$$

and

$$\sec \phi dv_1 = d(v_1 \sec \phi), \ \phi \text{ being constant,}$$

make

$$v_1 \sec \phi = \frac{v \cos \theta}{\cos \phi} = u. \quad . \quad . \quad . \quad . \quad . \quad . \quad . \quad (24)$$

$$V_1 \sec \phi = \frac{V \cos \phi}{\cos \phi} = V.$$

Making these substitutions in Eq. (22) and integrating between the limits u and V we obtain

$$x = \frac{C}{(n-2)A_n}\left[\frac{1}{u^{n-2}} - \frac{1}{V^{n-2}}\right]. \quad . \quad . \quad . \quad . \quad (25)$$

Digitized by Google

And similarly Eqs. (16) and (19) may be brought to the forms

$$t=\frac{C}{(n-1)A_n\cos\phi}\left[\frac{1}{u^{n-1}}-\frac{1}{V^{n-1}}\right]; \quad . \quad . \quad (26)$$

$$\tan\phi-\tan\theta=\frac{gC}{nA_n\cos^2\phi}\left[\frac{1}{u^n}-\frac{1}{V^n}\right] \quad . \quad . \quad . \quad . \quad . \quad (27)$$

To simplify Eqs. (25) to (27), make

$$\left.\begin{aligned} S(u)&=\frac{1}{(n-2)A_nu^{n-2}}+Q;\\ S(V)&=\frac{1}{(n-2)A_nV^{n-2}}+Q;\\ T(u)&=\frac{1}{(n-1)A_nu^{n-1}}+Q'\\ I(u)&=\frac{2g}{nA_nu^n}+Q''\\ A(u)&=-\frac{1}{A_n}\int\frac{I(u)du}{u^{n-1}}+Q''' \end{aligned}\right\} \quad . \quad . \quad . \quad . \quad (28)$$

These are known as the space, time, inclination and altitude functions, respectively, as indicated by the letter. The reasons for this designation will appear from the equations below.

Substituting in Eqs. (25) to (27) the values of the functions in Eqs. (28) we obtain

$$x=C[S(u)-S(V)]; \quad . \quad . \quad . \quad . \quad . \quad . \quad . \quad . \quad (29)$$

$$t=\frac{C}{\cos\phi}[T(u)-T(V)]; \quad . \quad . \quad . \quad . \quad . \quad . \quad (30)$$

$$\tan\theta=\tan\phi-\frac{C}{2\cos^2\phi}[I(u)-I(V)]. \quad . \quad . \quad . \quad (31)$$

Digitized by Google

Making, in the last equation, $\tan\theta = dy/dx$, Eq. (31) may be brought to the form*

$$\frac{y}{x} = \tan\phi - \frac{C}{2\cos^2\phi}\left[\frac{A(u)-A(V)}{S(u)-S(V)} - I(V)\right]. \quad . \quad . \quad (32)$$

Eqs. (29) to (32) with the equations

$$u = v\frac{\cos\theta}{\cos\phi}, \quad . \quad . \quad . \quad . \quad . \quad . \quad . \quad . \quad (33)$$

and

$$C = \frac{\delta_1}{\delta} f_a f_w \frac{w}{\beta c \gamma d^2}, \quad . \quad . \quad . \quad . \quad . \quad . \quad (34)$$

are the fundamental equations of Exterior Ballistics. The essence of the method of their deduction lies in the use of u, called by Siacci, the pseudo velocity.

It will be seen from Eq. (33) that V is a particular value of u, since $\theta = \phi$ at the muzzle.

245. Formulas for the Whole Range.—Designate the whole range, Fig. 182, by X, the corresponding time of flight by T, the angle of fall (considered positive for convenience) by ω, and use the subscript ω to designate the values of u and v at the point of fall.

* From Eq. (31)

$$dy = \tan\phi dx - \frac{C}{2\cos^2\phi}[I(u)dx - I(V)dx]. \quad . \quad . \quad . \quad . \quad . \quad (35)$$

From $v_1 \sec\phi = u$ and Eq. (22)

$$dx = \frac{Cdu}{A_n u^{n-1}}.$$

Substitute this value in the second term of the second member of (35). Integrate the equation between the limits of u and V with the use of the $A(u)$ in Eq. (28), and divide through by x. Whence

$$\frac{y}{x} = \tan\phi - \frac{C}{2\cos^2\phi}\left[\frac{C[A(u)-A(V)]}{x} - I(V)\right]. \quad . \quad . \quad . \quad . \quad (36)$$

Substituting for $\frac{C}{x}$ its value from Eq. (29) we obtain Eq. (32).

Digitized by Google

At the point of fall $y=0$ and $\theta=-\omega$; and after combining Eqs. (31) and (32) to eliminate $I(V)$, Eqs. (29) to (31) become, respectively

$$X=C[S(u_\omega)-S(V)]; \quad . \quad . \quad . \quad . \quad . \quad . \quad . \quad . \quad (37)$$

$$T=\frac{C}{\cos\phi}[T(u_\omega)-T(V)]; \quad . \quad . \quad . \quad . \quad . \quad . \quad . \quad (38)$$

$$\tan\omega=\frac{C}{2\cos^2\phi}\left[I(u_\omega)-\frac{A(u_\omega)-A(V)}{S(u_\omega)-S(V)}\right] \quad . \quad . \quad . \quad (39)$$

$$\sin 2\phi=C\left[\frac{A(u_\omega)-A(V)}{S(u_\omega)-S(V)}-I(V)\right]; \quad . \quad . \quad . \quad . \quad . \quad (40)$$

$$u_\omega=v_\omega\frac{\cos\omega}{\cos\phi}. \quad . \quad . \quad . \quad . \quad . \quad . \quad . \quad . \quad . \quad . \quad . \quad (41)$$

At the summit of the trajectory $\theta=0$. Using the subscript $_0$ to designate the summit, Eqs. (31) and (33) become, after reduction

$$I(u_0)=\frac{\sin 2\phi}{C}+I(V); \quad . \quad . \quad . \quad . \quad . \quad . \quad . \quad (42)$$

and

$$u_0=\frac{v_0}{\cos\phi}. \quad . \quad . \quad . \quad . \quad . \quad . \quad . \quad . \quad . \quad . \quad . \quad (43)$$

Combining (40) and (42) we have

$$I(u_0)=\frac{A(u_\omega)-A(V)}{S(u_\omega)-S(V)}; \quad . \quad . \quad . \quad . \quad . \quad . \quad . \quad (44)$$

Therefore (39) and (40) become

$$\tan\omega=\frac{C}{2\cos^2\phi}[I(u_\omega)-I(u_0)]; \quad . \quad . \quad . \quad . \quad (45)$$

$$\sin 2\phi=C[I(u_0)-I(V)]. \quad . \quad . \quad . \quad . \quad . \quad . \quad . \quad (46)$$

246. Computation of the Functions.—The values of the functions given in Eq. (28) have been computed for values of u at

Digitized by Google

varying intervals from $u=3600$ f. s. to $u=100$ f. s. and tabulated in Table I of Artillery Circular M.

The method of employing the constants Q, Q', etc., in forming the tables is best shown by an example. The value of the S function is, Eq. (28),

$$S(u)=\frac{1}{(n-2)A_n u^{n-2}}+Q.$$

For values of v greater than 2600 f. s., Mayevski's values are, $n=1.55$, and $\log A_n=7.60905-10=\log A_1$. Therefore for a velocity greater than 2600 f. s.

$$S(u)=-\frac{u^{0.45}}{0.45A_1}+Q=-\frac{1}{0.45A_1}(u^{0.45}+Q_1). \quad . \quad . \quad (47)$$

In order to avoid the use of large numbers, Table I is so constructed that the S, A, and T functions reduce to zero for $u=3600$. $I(u)$ reduces to zero for $u=\infty$. We have then for $S(u)$, when $u=3600$,

$$S(u)=-\frac{1}{0.45A_1}\overline{(3600}^{0.45}+Q_1)=0; \quad . \quad . \quad . \quad . \quad . \quad (48)$$

and therefore

$$Q_1=-(3600)^{0.45}.$$

For any other value of u down to 2600

$$S(u)=\frac{1}{0.45A_1}\overline{(3600}^{0.45}-u^{0.45})=K-K^1u^{0.45}; \quad . \quad . \quad (49)$$

For velocities between 2600 and 1800 f. s., $n=1.7$, and

$$S(u)=-\frac{1}{0.3A_2}(u^{0.3}+Q_2);$$

Q_2 must have such a value as to make the value of $S(u)$ for $u=2600$ the same as the value determined from Eq. (49) with this value of u. Therefore

$$-\frac{1}{0.3A_2}\overline{(2600}^{0.3}+Q_2)=K-K^1\overline{2600}^{0.45}, \quad . \quad . \quad . \quad (50)$$

from which the value of Q_2 can be determined.

Digitized by Google

The same process is followed at each change in the value of n and A.

When $n=2$ Eq. (25) becomes indeterminate and the values of the functions cannot be determined as above; but making $n=2$ in Eq. (22) and integrating we obtain

$$x=-\frac{C}{A_n}(\log_e u-\log_e V); \quad \ldots\ldots \quad (51)$$

$S(u)$ becomes in this case

$$S(u)=-\frac{\log_e u}{A_n}+Q. \quad \ldots\ldots\ldots \quad (52)$$

247. Secondary Functions.—Formulas (37) to (46) have, however, been further simplified by the assumption of the following secondary functions due to Colonel James M. Ingalls, U. S. A., retired:

$$\left.\begin{aligned} Z&=\frac{X}{C} \qquad z=\frac{x}{C};\\ A&=\frac{A(u_\omega)-A(V)}{S(u_\omega)-S(V)}-I(V);\\ A'&=I(u_\omega)-I(V);\\ A''&=\frac{A'-A}{A'}Z;\\ B&=A'-A;\\ B'&=\frac{A'-A}{A};\\ T'&=T(u_\omega)-T(V);\\ C'&=\frac{A}{Z}=\frac{\sin 2\phi}{X}. \end{aligned}\right\} \quad \ldots\ldots \quad (53)$$

The values of these functions, together with the corresponding values of u, have been tabulated in Table II, Artillery Circular M, as functions of $X/C=Z$, and V.

Digitized by Google

Substitute in Eqs. (40), (38), (39), (31), and (32) the values of the secondary functions from Eq. (53) and use capital letters to designate the values of functions pertaining to the entire range, and small letters to designate values pertaining to a particular point of the trajectory for which $x=Cz$.

In deducing (57) from (39) use the relation,

$$A=\frac{\sin 2\phi}{C}=\frac{2\sin\phi\cos\phi}{C}, \text{ derived from (55).}$$

$$Z=\frac{X}{C}; \quad . \quad . \quad . \quad . \quad . \quad . \quad . \quad . \quad (54)$$

$$\sin 2\phi=AC; \quad . \quad . \quad . \quad . \quad . \quad . \quad . \quad . \quad (55)$$

$$T=\frac{CT'}{\cos\phi}; \quad . \quad . \quad . \quad . \quad . \quad . \quad . \quad (56)$$

$$\tan\omega=B'\tan\phi; \quad . \quad . \quad . \quad . \quad . \quad . \quad (57)$$

$$\tan\theta=\frac{\tan\phi}{A}(A-a'); \quad . \quad . \quad . \quad . \quad (58)$$

$$y=\frac{x\tan\phi}{A}(A-a). \quad . \quad . \quad . \quad . \quad (59)$$

At the summit of the trajectory $\theta=0$. Designating the corresponding values of y, a, and a', by y_0, a_0, and a'_0, etc., we have from (58)

$$a'_0=A. \quad . \quad . \quad . \quad . \quad . \quad . \quad . \quad . \quad . \quad . \quad (60)$$

Making, in (59), $x=Cz$ and $A=a'_0$ and reducing we obtain

$$y_0=a''_0\,C\tan\phi. \quad . \quad . \quad . \quad . \quad . \quad . \quad (61)$$

The equations for the values of v and C will be repeated here·

$$v=\frac{u\cos\phi}{\cos\theta}; \quad . \quad . \quad . \quad . \quad . \quad . \quad . \quad (62)$$

$$C=\frac{\delta_1}{\delta}f_a f_w\frac{w}{\beta c\gamma d^2}; \quad . \quad . \quad . \quad . \quad . \quad . \quad (63)$$

Digitized by Google

in which

$$f_a = 1 + .00002 y_0 \quad \ldots\ldots\ldots \quad (64)$$

for direct fire.

$$f_a = \frac{1}{1 - .000027h} \quad \ldots\ldots\ldots \quad (65)$$

for high-angle fire.

$$f_w = 1 \pm \frac{2W_z T^{5/4}}{X}; \quad \ldots\ldots\ldots \quad (66)$$

$$\beta = \sqrt{1 + .4 \tan^2 \phi}, \quad \ldots\ldots\ldots \quad (67)$$

used in curved and high-angle fire. Considered unity for direct fire.

$$c = \frac{2k}{n}\sqrt{\frac{4n-1}{7}} = \quad \ldots\ldots\ldots \quad (68)$$

unity for standard projectiles.

$$\gamma = \frac{d^3}{2w}\left(1 + \frac{\phi + \omega}{135}\right), \quad \ldots\ldots\ldots \quad (69)$$

for shrapnel and capped projectiles and for direct fire only.

$$\gamma = \frac{1}{\cos \phi}, \quad \ldots\ldots\ldots \quad (70)$$

for high-angle fire with capped projectiles.

The value of h for use in formula (65) will usually be obtained in practice from the tabulated values of log h/X given in the table of high-angle fire ratios to be described later. When necessary it may be computed by one of the following formulas, the first being the more accurate:

$$h = \left(\tan \phi - \tfrac{1}{4}\frac{\sec^3 \phi}{(\phi)} + \tfrac{1}{4} \cot \phi\right)\frac{X}{4}. \quad \ldots\ldots \quad (71)$$

$$h = \frac{\sin 2\phi \, V^2}{4g}\left(\tan \phi - \tfrac{1}{4}\frac{\sec^3 \phi}{(\phi)} + \tfrac{1}{4} \cot \phi\right). \quad \ldots\ldots \quad (72)$$

Where ϕ is shown in brackets it is to be taken in radians.

Digitized by Google

248. The Principle of the Rigidity of the Trajectory.—This principle assumes that if the angle of departure necessary to reach a target at a range x from the gun and on the same horizontal plane be determined, the same angle of departure if measured with respect to the line of sight from the gun to the target in each case will cause the projectile to reach any target above or below the first target and at the same horizontal distance from the gun. It is evident that by this principle range table elements computed for horizontal ranges become directly applicable to trajectories in which the target is above or below the gun. The term rigidity in this connection refers to the supposed rigid shape of the trajectory with respect to the line of sight or cord drawn from the muzzle of the gun to the target. It will be noted that the target is here assumed to move along a vertical line and not on the arc drawn with the muzzle of the gun as a center. This assumption may be made without serious error for the limited values of ϵ encountered in practice. The assumption of the principle of the rigidity of the trajectory in direct fire in practical problems is productive of no error of note. Such error as would be produced is almost compensated for by an opposite error in f_a due to the fact that the corresponding change in the value of y_0 is not usually considered.

249. Table II.—Artillery Circular M.—Table II, Artillery Circular M, the work of Colonel James M. Ingalls, U. S. Army, retired, is used in the solution of practically all problems in direct fire. It essentially consists of forty separate tables computed for as many different muzzle velocities ranging from 800 f. s. to 3200 f. s.

From 800 f. s. to 1000 f. s. the tables vary by 25 f. s.; from 1000 f. s. to 2000 f. s. they vary by 50 f. s.; beyond 2000 f. s. they vary by 100 f. s. The values given in each table are computed for the first of the muzzle velocities printed at the top of the page. By entering the table with the arguments V and $Z=X/C$ the corresponding values of the functions A, T', B', and u may be taken therefrom for use in Eqs. (55), (56), (57), and (62).

Having obtained the value of a'_0 from Eq. (60) the corre-

Digitized by Google

sponding values of a''_0 may, with V as the other argument, be obtained from the table for use in (61). It will be noted that each function in Table II is followed by a ΔZ value giving the variations in the function for a variation of 100 in Z, and a ΔV value giving the variations in the function for the variation in V indicated at the head of the table. The ΔV column will not be used in the method of interpolation to be employed. The solution of the following range table problem will serve to illustrate the use of Table II and the ballistic formulas.

Example I:

Assume $d = 10$ ins.;
$w = 604$ lbs.;
$V = 2250$ f. s.;
$X = 7000$ yds.

Determine the range table values of ϕ, ω, T, and v_ω.

Range table value of $\log C = 0.83167$.

$$Z = \frac{X}{C} = \frac{21000}{[0.83167]} = 3094.2.$$

To determine the values of the necessary functions from Table II for $V = 2250$ f. s. and the above value of Z, compute the value of each function for $V = 2300$, then for $V = 2200$, then interpolate for $V = 2250$ f. s. as follows:

$Z = 3094.2$					$a'_0 = A = .0260$
V	A	$\log B'$	T'	u	a''_0
2300	.02484	.1153	1.648	1544	916
2200	.02724	.1162	1.727	1472	846
$\Delta 100$	−.00240	−.0009	−.079	+72	70
$\Delta 50$	−.00120	−.0004	−.039	+36	35
2250	.02604	.1158	1.688	1508	881

Digitized by Google

The following are the details of the above computations for $V=2300$. The equations as written below are not mathematically exact, because an auxiliary decimal point must be assumed at the end of the function when adding the differences.

$$\begin{aligned} A &= .02386 + 104 \times .942 = .02484; \\ \log B' &= .1117 + 38 \times .942 = .1153; \\ T' &= 1.588 + 64 \times .942 = 1.648; \\ u &= 1564 - 21 \times .942 = 1544; \\ a''_0 &= 910 + \tfrac{12}{19} \times 58 = 916. \end{aligned}$$

Substituting the above values of the functions in Eqs. (55), (56), (57), (61), and (62), we obtain the following range table values:

$$\sin 2\phi = AC = .02604 \times [0.83167];$$

$$2\phi = 10^\circ\ 10.'8;$$

$$\phi = 5^\circ\ 5.'4;$$

$$\tan \omega = B' \tan \phi = [0.1158] \tan 5^\circ\ 5.'4;$$

$$\omega = 6^\circ\ 38';$$

$$T = \frac{CT'}{\cos \phi} = \frac{[0.83167] \times 1.688}{\cos 5^\circ\ 5.'4} = 11.5 \text{ seconds.}$$

$$v_\omega = \frac{u \cos \phi}{\cos \omega} = \frac{1508 \cos 5^\circ\ 5.'4}{\cos 6^\circ\ 38'} = 1512 \text{ f. s.};$$

$$y_0 = a''_0\, C \tan \phi = 881 \times [0.83167] \tan 5^\circ\ 5.'4 = 533 \text{ ft.}$$

Compare the above results with those given in Range Table.

250. Determination of C from Firings.—In the U. S. Service the range table values of C are usually computed from results of firings made for the purpose in which ϕ, V, X, and usually T, are accurately measured at a number of ranges. Separate determinations are usually made for each of the principal varieties of service projectiles and the corresponding service velocities. The

Digitized by Google

values of C thus determined are plotted as functions of the range in each case and thus become available for use in the determination of the other ballistic elements as already explained.

Example 2.—Assume the following firing data to have been secured:

$d = 10''$;
$w = 604$ lbs.;
$V = 2250$ f. s.;
$\phi = 7^\circ\ 17'$;
$X = 9000$ yds.;
$T = 16$ seconds.

Bar. 29.5 in. Ther. 67° F. One o'clock wind of 10 miles per hour.

Determine the range table value of C for that range.

To determine the range table value of C it will be necessary to find the full value as given by Eq. (11), then deduct the factors that do not appear in the range table value. From

$$Z = \frac{X}{C},\ \sin 2\phi = AC,\ \text{and Eq. (53)},\ C' = \frac{A}{Z}.$$

We obtain

$$C' = \frac{A}{Z} = \frac{\sin 2\phi}{X} = \frac{\sin 14^\circ\ 34'}{27000} = .000009315.$$

$$\text{Log } C' = 4.9692 - 10.$$

From Table II with the above value of log C' as an argument, we get the following values of Z:

V	Z
2200	3657
2300	4554
2250	4105.5

With $z = 4105.5$, we get,

$$C_1 = \frac{27000}{4105.5} = (0.81799).$$

Digitized by Google

To obtain the range table value of C we must divide the above value by δ_1/δ, and f_w.

From Table VI, Artillery Circular M, or Table XIV, at the end of the text, $\delta_1/\delta = 1.037 - (1.037 - 1.003) \times .5 = 1.02$.

$$f_w = 1 \pm \frac{2W_z T^{5/4}}{X} = 1 - \frac{2 \times 10 \cos 30° \times 16^{5/4}}{27000} = .97947.$$

Whence

$$C = \frac{C_1}{\delta_1/\delta \times f_w} = \frac{[0.81799]}{1.02 \times .9795} = [0.81841].$$

If the value of T had not been given for use in the f_w equation a value nearly accurate might have been computed as previously described, using the values of Z and C_1 given above.

Where the given velocity is half way between tabular values, the determination of functions can be slightly shortened by taking one-half the sum of the tabular values, as indicated above.

251. Computation of C without Firings.—Where C has not been determined from firings its value may be computed from Eq. (12). It will be noted that the computation of f_a, β, and γ appearing in that formula requires the use of certain ballistic elements which are not known and whose computation involves the use of C, as will be seen later. In this case the required ballistic elements must first be computed with the approximate value of C obtained by assuming f_a, β, and γ equal to unity. The ballistic elements thus computed must then be used to determine approximate values of f_a, β, and γ for use in recomputing a more accurate value of C. By repeating this operation a practically correct value of C will ultimately be secured. Three approximations are usually sufficient for the purpose.

EXAMPLE 3.—

Assume $d = 12''$;

$w = 1046$ lbs.;

$V = 2250$ f. s.;

$X = 6000$ yds. $= 18000$ ft.

(Capped projectiles of standard form.)

Digitized by Google

Determine the range table value of C.
In the equation

$$C = f_a \frac{w}{\beta c \gamma d^2};$$

$c = 1$ since the projectile is of standard form;
$\beta = 1$ since the problem is evidently direct fire.

Because the equations for f_a and γ, Eqs. (64) and (69), involve the values of ϕ and ω which are dependent upon the value of C, it is necessary to proceed by a series of approximations. The successive values of C will be designated C_1, C_2, etc.

$$C_1 = \frac{w}{d^2} = \frac{1046}{144} = [0.86117];$$

$$Z = \frac{X}{C_1} = \frac{18000}{[0.86117]} = 2478.$$

$Z = 2478$			$a'_0 = .0197$
V	A	$\log B'$	a''_0
2300	.01875	.0917	718
2200	.02056	.0928	663
Sum	.03931	.1845	1381
2250	.01966	.09225	691

From the above values we obtain $\sin 2\phi = AC_1 = .01966\,[0.86117]$.

$$\phi = 4^\circ\ 6.'3;$$

$$\tan \omega = B' \tan \phi = [.09225] \tan 4^\circ\ 6.'3;$$

$$\omega = 5^\circ\ 4.'3;$$

$$y_0 = a''_0\, C_1 \tan \phi = 691[0.86117] \tan 4^\circ\ 6.'3 = 360.2 \text{ ft.};$$

$$f_a = 1 + .00002\, y_0 = 1.0072;$$

Digitized by Google

$$\gamma=\frac{d^3}{2w}\left(1+\frac{\phi+\omega}{135}\right)=\frac{1728}{2092}\left(1+\frac{4.1+5.1}{135}\right)=[9.94562-10];$$

$$C_2=\frac{C_1 f_a}{\gamma}=\frac{[0.86117]1.0072}{[9.94562-10]}=[0.91867];$$

With the value of C_2 as a working basis determine C_3 in the same manner as above

$$Z=\frac{X}{C_2}=\frac{18000}{[.91867]}=2170.7.$$

$Z=2170.7$			$a'_0=.0167$
V	A	$\log B'$	a''_0
2300	.01594	.0800	621
2200	.01748	.0810	573
Sum	.03342	.1610	1194
2250	.01671	.0805	597

$$\sin 2\phi=AC_2=.01671[0.91867];$$

$$\phi=3^\circ\ 58.'9;$$

$$\tan\omega=B'\tan\phi=[.08050]\tan 3^\circ\ 58.'9;$$

$$\omega=4^\circ\ 47.'2;$$

$$y_0=a''_0\,C_2\tan\phi=597[0.91867]\tan 3^\circ\ 58.'9=345\text{ ft.};$$

$$f_a=1+.00002y_0=1.0069;$$

$$\gamma=\frac{d^3}{2w}\left\{1+\frac{\phi+\omega}{135}\right\}=\frac{1728}{2092}\left\{1+\frac{4+4.8}{135}\right\}=[9.94441];$$

$$C_3=\frac{C_1 f_a}{\gamma}=\frac{[0.86117]1.0069}{[9.9441]}=[0.91975].$$

The value of C_3 differs so little from C_2 that no further approximations are necessary. With the value of C_3 and X the other

Digitized by Google

elements of the trajectory for that range may be computed as before.

The value of C published in the latest range tables as determined from the results of firings, is $\log C = 0.91986$.

252. Range Table Conditions.—The ranges and corresponding angles of departure given in range tables, are based on the following assumed conditions:

1. That gun and target are in the same horizontal plane.
2. That δ_1/δ is unity.
3. That there is no wind.
4. That the projectile has a certain muzzle velocity.
5. That the projectile is of the caliber, weight and form, corresponding to the range table value of C used.

Range Board Corrections.—Since these conditions will rarely exist at the time of firing a particular shot, means must be provided for readily correcting the angle of departure for any variations from them.

The following corrections must thus be provided for:

1. The varying values of the angle of site ϵ. These are computed from the known height of the gun and the assumed ranges. They must be subtracted in each case from the range table elevations to obtain the quadrant angles for setting the clinometer in graduating the elevation scale.
2. Variations in range due to variations in δ_1/δ.
3. Variation in range due to a head wind or to a rear wind.
4. Variations in range due to variations in muzzle velocity.
5. Variations in range due to variations in weight of projectile.
6. Variations in range due to variations in temperature of powder charge.
7. Variations in range due to changes in height of tide.
8. Correction must also be made for variations in range arising from the travel of the target during the predicting interval plus the time of flight.

The corrections specified above, except Nos. 1 and 8, are computed in a manner to be explained. Nos. 2, 3, 4, and 7 are embodied in

Digitized by Google

graduations on a range board, by means of which they are mechanically combined and the resultant value indicated.

General Discussion.—The elevation range scales on practically all sea-coast guns in service are graduated in yards, each graduation being so located as to secure the angle of departure necessary to obtain the corresponding range if the gun be fired under normal conditions. The graduations may, therefore, be considered as merely representing angles of departure under normal conditions. The setting necessary to secure any desired range under abnormal conditions will then be that graduation whose range table angle of departure is the same as the angle required to secure the desired range under the assumed abnormal conditions. The range board correction for any assumed abnormal conditions will then be the difference between the desired range and the range table range having the same angle of departure, the latter being the range on the elevation disk to which the gun is actually set.

253. Range Corrections for Variations in C.—To illustrate the computation of a range correction for a given change in the ballistic coefficient:

EXAMPLE 4.—

Assume $V = 2250$ f.s.;
$X = 9000$ yards $= 27000$ feet;
$\log C = 0.90421$.
} Range table conditions

Determine the ΔX correction for $\frac{\Delta C}{C} = +10\%$.

To determine the actual elevation required under the assumed abnormal conditions, we have

$$Z_1 = \frac{X}{C+\Delta C} = \frac{27000}{1.1 \times [0.90421]} = 3060.3; \quad . \quad . \quad . \quad (74)$$

Designating as A_1 the corresponding value of A to be taken from Table II, we have for the required elevation

$$\sin 2\phi_1 = A_1(C+\Delta C). \quad . \quad . \quad . \quad . \quad . \quad . \quad (75)$$

Digitized by Google

With the same elevation under range table conditions, that is with C normal, we would have

$$\sin 2\phi_1 = A_2 C. \quad . \quad . \quad . \quad . \quad . \quad . \quad . \quad (76)$$

Combining the last two equations

$$A_2 C = A_1(C + \Delta C). \quad . \quad . \quad . \quad . \quad . \quad . \quad . \quad . \quad (77)$$

Whence

$$A_2 = A_1\left(1 + \frac{\Delta C}{C}\right) = 1.1 A_1. \quad . \quad . \quad . \quad . \quad . \quad (78)$$

From Table II.—

$Z_1 = 3060.3$		$A_2 = 1.1A_1$	Z_2 from A_2
V	A_1		
2300	.02449	.02694	3291.6
2200	.02686	.02955	3291.5
Sum			6583.1
2250			3291.5

For Z_2 we obtain as the range table range for the elevation ϕ_1, hence as the actual setting for the elevation scale,

$$X_2 = CZ_2 = [0.90421] \times 3291.5 = 26400 \text{ ft.} = 8800 \text{ yds.}$$

For the range correction

$$\Delta X = 9000 - 8800 = 200 \text{ yds.}$$

Range corrections are usually tabulated for each 1000 yds. of range and for each 2% variation in C from -16% to $+16\%$ from the normal. They are usually computed for $\mp 10\%$ and $\mp 20\%$ variation in C and the intermediate values added by interpolation.

254. Range Corrections for Variations in δ_1/δ.—Range corrections for variations in δ_1/δ are taken from the resulting variations in C, computed as just described. To determine the effect on C of variations in δ_1/δ we have

$$\Delta C = \frac{\delta_1}{\delta C - C}. \quad . \quad . \quad . \quad . \quad . \quad . \quad . \quad (79)$$

Digitized by Google

Whence

$$\frac{\Delta C}{C}=\frac{\delta_1}{\delta-1}. \quad \ldots\ldots\ldots \quad (80)$$

EXAMPLE 5.—

Assume Barometer = 29 inches. Temperature 59°.

Determine the corresponding variation in C;

From Table VI, Artillery Circular M, we obtain

$$\frac{\delta_1}{\delta}=1.02.$$

Hence

$$\frac{\Delta C}{C}=1.02-1=+.02=+2\% \text{ variation in } C.$$

The δ_1/δ corrections are embodied in a graphic chart on the range board. The arguments for this chart are the range and certain reference numbers obtained from the atmospheric board by the use of the barometer and thermometer readings.

Range Corrections for Wind.—Range corrections for wind are taken from the ΔC correction table computed as described above. To determine the ΔC variation for a range component W_x in miles per hour we have:

$$\Delta C=f_w C-C. \quad \ldots\ldots\ldots \quad (81)$$

Whence

$$\frac{\Delta C}{C}=f_w-1=\pm\frac{2W_x T^{5/4}}{X}. \quad \ldots\ldots \quad (82)$$

EXAMPLE 6.—

Assume $W_x = 10$ miles per hour head wind;

$T = 13$ seconds;

$X = 8000$ yards $= 24000$ ft.;

$\log C = 0.90971$.

Determine the percentage value of ΔC.

$$\frac{\Delta C}{C}=\pm\frac{2W_x T^{5/4}}{X}=-\frac{2\times 10\times 13^{5/4}}{24000}=-.02057=-2\%.$$

Digitized by Google

Range Corrections for Wind are usually tabulated for each 1000 yds. of range and each 10 miles per hour of range component from a 50-mile head wind through zero to a 50-mile rear wind. The corrections are then embodied in a graphic chart on the range board.

255. Range Corrections for Variations in V.—To illustrate the computation of a range correction for a given change in V.

EXAMPLE 7.—

Assume $V = 2250$ f. s.;
$X = 9000$ yds. $= 27000$ ft.;
$\log C = 0.90421$.

Determine the ΔX correction for $\Delta V = +50$ ft. sec.

To determine the actual elevation required under the abnormal conditions

$$Z = \frac{X}{C} = \frac{27000}{[0.90421]} = 3366.3.$$

From Table II for this value of Z and for $V = 2300$ we obtain as the value for A

$$A_1 = .02776.$$

Whence for the angle of elevation under the abnormal conditions

$$\sin 2\phi_1 = A_1 C.$$

For the same elevation under range table conditions we would have

$$\sin 2\phi_1 = A_2 C. \quad . \quad . \quad . \quad . \quad . \quad . \quad . \quad (84)$$

Whence

$$A_2 = A_1. \quad . \quad . \quad . \quad . \quad . \quad . \quad . \quad . \quad (85)$$

Hence, to find the range table range for the elevation ϕ_1, determine the value of Z_2 for the above value of A_1 and the range table value of V.

Digitized by Google

$A_2 = .02776$	
V	Z_2
2300	3366.4
2200	3138.8
Sum	6505.2
2250	3252.6

From Z_2 we obtain as the range table range for the elevation ϕ_1,

$$X_2 = CZ_2 = [0.90421] \times 3252.6 = 26088 \text{ ft.} = 8696 \text{ yds.}$$

Whence

$$\Delta X = 9000 - 8696 = 304 \text{ yds.}$$

Range corrections for changes in muzzle velocity are usually tabulated for each 1000 yds. of range and for each variation of 50 ft. per second for 150 ft. each side of the normal velocity.

They are then embodied in a graphic chart on the range board.

256. Range Correction for Change in Weight of Projectile.—A change in the weight of projectile makes a change both in the ballistic coefficient and in the muzzle velocity.

For the change in C we have

$$\Delta C = \frac{\Delta w}{w} C. \quad \ldots\ldots\ldots \quad (86)$$

Whence

$$\frac{\Delta C}{C} = \frac{\Delta w}{w}.$$

The corrections for this factor may be taken from the ΔC values computed as previously described.

From interior ballistics we have

$$\frac{\Delta V}{V} = -\frac{7}{16}\frac{\Delta w}{w}.$$

Digitized by Google

The corrections for this factor may be taken from the ΔV values computed as previously described.

The resultant range correction is obtained by combining the two factors given above.

If it be desired in any case to bring the muzzle velocity to a standard value by changing the weight of the powder charge use the formula

$$\Delta\hat{\omega} = \frac{5}{6}\hat{\omega} \times \frac{\Delta V}{V}. \quad . \quad . \quad . \quad . \quad . \quad . \quad . \quad (87\text{–A})$$

This applies to nitrocellulose powder and to small changes only.

Range Corrections for Variations in Temperature of Powder Charge.—The following empirical formula has been deduced as giving the change in the muzzle velocity for powders tested at 70° F. and fired with a magazine temperature $t°$ F.

$$\Delta V = V \times .00867\{2^{.032t} - 2^{.032\times 70}\} = V \times .00867\{2^{.032t} - 4.73\}. \quad (88)$$

Assume $t = 50°$ F.;

$V = 2300$ f. s.;

Determine the value of ΔV.

$$\Delta V = .00867\{2^{.032\times 50} - 4.73\} \times 2300 = -34 \text{ f. s.}$$

The range correction for this value may be taken from the ΔV values computed as previously described.

The change in muzzle velocities due to variations in the weight of the powder charge and in its temperature are embodied in curves on a powder chart.

257. Range Correction for Tide.—The range correction for variations in height of tide may, without material error, be assumed as equal to the assumed variation h, times the cotangent of the angle of fall.

Thus

$$\Delta X = h \cot \omega.$$

The range corrections are usually tabulated for 10 ft. tide for each 1000 yds. of range.

Digitized by Google

Range Corrections for Travel of Target.—The range correction for the movement of the target during the predicting interval plus the time of flight is determined from the observed travel with respect to the gun during the observing interval, assuming that this rate will continue uniform.

Thus

$$\text{Speed of target} = \frac{\text{observed travel}}{\text{oberving intervals}}. \quad . \quad . \quad . \quad (90)$$

Hence

$$\text{Travel during time of flight} = \frac{\text{observed travel}}{\text{observing interval}} \times T. \quad . \quad . \quad (91)$$

EXAMPLE 9.—

Assume Observing interval = 30 seconds;
Predicting interval = 30 seconds;
Observed travel = 300 yds.;
$T = 15$ seconds.

Determine range correction for travel during predicting interval plus time of flight.

$$\Delta X = 300 + \frac{300}{30} \times 15 = 450 \text{ yds.}$$

The ΔX values for the time of flight and for the usual predicting interval are mechanically computed by means of a prediction scale and a setforward ruler and the predicted position of the target is plotted and the range and azimuth taken therefrom.

Curvature of the Earth.—If a point move away on the surface of a sphere from another point, it will, after moving 90° on a great circle, have acquired an angular depression of 45° from the tangent to the circle at the stationary point. A simple figure will show that the depression due to curvature is, in every case, one-half the curvature of the circle between the two points. From this relation the following equation giving the curvature, K, in feet in terms of the range, R, in yards has been deduced

$$K = [3.33330 - 10]R^2.$$

Digitized by Google

The effect of curvature should be considered in computing the value of the angle of ϵ for direct fire guns, but its value may be neglected for mortars. An automatic correction for the change in height of instrument due to curvature is usually embodied in depression range finders.

258. Deflection Corrections.—Deflection corrections are required for wind, drift, and travel of target. The corrections, as determined for each type of gun, are embodied in graduations on the deflection board, by means of which they are mechanically combined and the resultant value indicated.

Deflection Due to Wind.—The following formula gives the deflection due to a wind component W_v in miles per hour perpendicular to the line of fire:

$$\text{Deflection (degrees)} = \frac{84\,W_v}{V\cos\phi}\left\{\frac{VT\cos\phi}{X} - 1\right\}. \quad . \quad (92)$$

EXAMPLE 10.—

Assume $d = 6$ ins.;
$w = 106$ lbs.;
$V = 2600$ f. s.;
$X = 8000$ yds.;
$\phi = 8°\ 21.'8$;
$T = 17.77$ secs.

Determine the deflection due to a cross wind of 10 miles per hour.

$$\text{Deflection} = \frac{84\times 10}{2600\cos 8°21.'8}\left\{\frac{2600\times 17.77\cos 8°21.'8}{24000} - 1\right\} = 0.°30.$$

Deflection Due to Drift.—The following formula gives the deflection due to drift:

$$\text{Drift (degrees)} = (1-K)\frac{d^3}{wn}\frac{(\phi+\omega)}{\cos\phi}. \quad . \quad . \quad . \quad (93)$$

In which

$K = 0.75$ for shot or steel shell
$= 0.80$ for cast-iron shell;
$n =$ Twist of rifling at muzzle in calibers.

Digitized by Google

Its usual values in the U. S. service are 25 for cannon, $33\frac{1}{3}$ for small arms; 25 for 12-in. steel mortar, and 20 for 12-in. cast-iron mortar, steel hooped.

The values of K given above are for projectiles of the usual form and length, with heads struck with a radius of 2 calibers. For any variation from these conditions the value of K must be found by actual firings.

EXAMPLE 11.—

Assume $d = 12$ ins.;
$w = 1046$;
$n = 25$;
$X = 10{,}000$ yds.;
$V = 2250$ f. s.;
$\phi = 7^\circ\ 51.'2$;
$\omega = 10^\circ\ 50'$.

Determine the value of the drift for armor-piercing projectiles at that range.

$$\text{Drift} = (1 - .75)\frac{1728}{1046 \times 25}\frac{(7.853 + 10.833)}{\cos 7^\circ\ 51.'2} = 0.^\circ 31.$$

Deflection Corrections for Travel of Target.—Deflection corrections for travel of target are computed for various predicting intervals and the time of flight corresponding to any assumed range in a manner similar to that already described for computing the range corrections. The correction is determined in practice from the observed change of azimuth by the target with respect to the gun during one or more observing intervals.

259. Perforation of Armor.—The latest range tables give for each 1000 yds. range the perforation of Krupp Armor with capped projectiles both for normal impact and for impact at 30° from the normal. Normal perforation is computed by one of the following empirical formulas:

For $v_\omega = 1800$ f. s. or less

$$t = [3.56549 - 10]\sqrt{\frac{w}{d}} \times \{v^2_\omega + 400 v_\omega\} \quad . \quad . \quad . \quad . \quad (94)$$

Digitized by Google

For $v_\omega = 1800$ f. s. or more

$$t = [0.10914]\sqrt{\frac{w}{d}} \times \left\{ \frac{v_\omega}{1000} - \frac{2}{3} \right\} . \quad . \quad . \quad . \quad . \quad . \quad (95)$$

To determine the perforation at an oblique angle of incidence, α, decrease the normal perforation in each case by the corresponding percentage in the table given below. The angle of incidence is measured from the normal.

α	%	α	%
0°	0	25°	6
5	0	30	8
10	1	35	11
15	2	40	15
20	4	45	19

The perforation formulas given above, as well as those given later, have been deduced by Lt. Col. Alston Hamilton.

EXAMPLE 12.—

$d = 12$ ins.;
$w = 1046$ lbs.;
$X = 4000$ yds.;
$v_\omega = 1884$ f. s.;

Determine the perforation by a capped armor-piercing shot at the given range, the angle of incidence being 30° from the normal.

$$t = [0.10914]\sqrt{\frac{w}{d}} \left\{ \frac{v_\omega}{1000} - \frac{2}{3} \right\} \{1.00 - .08\}$$

$$= [0.10914]\sqrt{\frac{1046}{12}} \left\{ \frac{1884}{1000} - \frac{2}{3} \right\} \times .92 = 13.44 \text{ ins.}$$

260. The Danger Spaces.—The danger spaces are the horizontal distances from either end of a trajectory to the points where the ordinates of the trajectory become equal to the height of the

Digitized by Google

object whose danger spaces are being determined. The danger space near the muzzle is of no practical importance, hence the one at the far end of the trajectory will alone be considered.

The Handbook for the U. S. Magazine Rifle, Caliber .30, contains a table giving the danger spaces for each 100 yds. range both for a target the height of a dismounted man, 68 ins., and one for the height of a mounted man, 96 ins.

The computations are made under the assumption that the gun is fired at 12 ins. above the ground while aimed at the middle point of the target. Under this assumption let it be required to

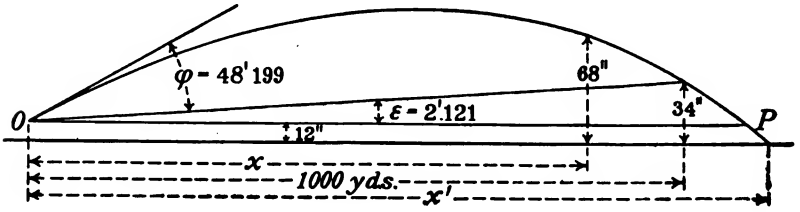

FIG. 183.

determine the danger space for a man 68 ins. high at 1000 yds. range.

EXAMPLE 13.—

Assume $d = .30$ in.;
$w = 150$ grs.;
$V = 2700$ f. s.;
$\log C = 9.59040 - 10$;
$\phi = 48.'199$ for $X = 1000$ yds.

In Fig. 183, $1000 - x$ evidently represents the danger space in front of the target and $x' - 1000$ represents the space in rear. To obtain an equation involving a relation between x and y in terms of ϕ, combine Eqs. (55) and (59) and substitute Cz for x.

Whence

$$(A - a)z = \frac{2y \cos^2 \phi}{C^2}. \quad . \quad . \quad . \quad . \quad . \quad . \quad . \quad (96)$$

Digitized by Google

For the trajectory OP, $\phi = \phi + \epsilon = 50.'32$. Considering this trajectory as a basis the problem is solved by the determination of the value of x corresponding to $y = 56''$ and the determination of x corresponding to $y = -12''$.

In the equation given above all the values are known in each case except a and the corresponding value of z. These must be selected by trial so as to satisfy the equation. The values of x and x' are then obtained from the relation $x = Cz$.

To determine A for the trajectory OP we have

$$A = \frac{\sin 2\phi}{C} = \frac{\sin 1^\circ 40.'64}{[9.59040]} = .07517.$$

Substituting this value in Eq. (96) and making $y = 56$ in. $= 14/3$ ft. we obtain

$$(.07517 - a)z = \frac{2 \times \cos^2 50.'32}{[9.18080 - 10]} \times \frac{14}{3} = 61.545.$$

To determine an approximate value of Z, we have

$$Z = \frac{X}{C} = \frac{3000}{[9.59040]} = 7704.$$

Since Z varies directly with the range, the required value will be somewhat smaller than the one just computed, corresponding to the range X. From Table II we obtain for $V = 2700$ f. s.

z	a	$(.07517 - a)z$
7300	.06520	72.781
7500	.06851	49.950
7400	.06684	61.642

By interpolation between 7400 and 7500 we obtain

$$z = 7400 + \frac{61.642 - 61.545}{61.642 - 49.950} \times 100 = 7400.9.$$

Digitized by Google

Whence

$$x = Cz = [9.59040] \times 7400.9 = 2882 \text{ ft.} = 960.7 \text{ yds.}$$

The danger space in front of the target is $\Delta X = 1000 - 960.7 = 39.3$ yds.

To determine the danger space in rear we will determine the value of x' for which $y = -1$ ft.

Substituting in Eq. (96) we obtain

$$(.07517 - a)z = \frac{2 \cos^2 50.'32}{[9.18080 - 10]} \times -1 = -13.188.$$

The required value of Z will in this case be somewhat greater than the value 7704 corresponding to the range X.

From Table II with $V = 2700$ f. s.

z	a	$(.07517 - a)z$
8000	.07727	−16.800
7900	.07546	− 2.291

Interpolating we obtain

$$Z = 7900 + \frac{13.188 - 2.291}{16.800 - 2.291} \times 100 = 7975.1$$

Whence

$$x = Cz = [9.59040] \times 7975.1 = 3105.6 \text{ ft.} = 1035.2 \text{ yds.}$$

The danger space in rear is then $\Delta X = 1035.2 - 1000 = 35.2$ yds.

Danger Space in Coast Artillery Work.—In computations to determine whether a hit has been made with direct fire at coast artillery target practice the coast artillery regulations prescribe that the danger space in rear of the target shall be taken as the height of the target times the cotangent of the angle of fall of the shot considered.

Digitized by Google

This method gives a distance slightly less than the true value but sufficiently close for practical purposes. The same regulations prescribe that the danger space in front of the target for such firings shall be assumed as ten yards short of the water line.

When the gun is mounted above the water level, as is usually the case, the formula for the danger space in rear of the target becomes

$$\Delta X = h \cot (\omega + \epsilon). \quad . \quad . \quad . \quad . \quad . \quad . \quad . \quad (97)$$

261. The Danger Range. When the danger space is continuous and coincides with the range it is called the danger range. It is an important unit in gunnery for comparing the efficiency of different guns. To determine the danger range it is necessary to compute the horizontal trajectory whose maximum ordinate (y_0) is given.

Substituting a'_0 for A in Eq. (55) and combining the resulting equation with (61), we obtain,

$$a'_0 a''_0 = \frac{2y_0 \cos^2 \phi}{C^2}. \quad . \quad . \quad . \quad . \quad . \quad . \quad . \quad (98)$$

Combining the expressions for A'' and B in Eqs. (53), we obtain for the summit,

$$a''_0 = \frac{b_0 z_0}{a'_0}. \quad . \quad . \quad . \quad . \quad . \quad . \quad . \quad . \quad (99)$$

Combine the last two equations and assume $\cos^2 \phi$ equal to unity.

This assumption may be made without seriously impairing the accuracy of the result, since ϕ rarely exceeds 1° for any danger range.

We thus obtain

$$b_0 z_0 = \frac{2y_0}{C^2}. \quad . \quad . \quad . \quad . \quad . \quad . \quad . \quad (100)$$

The value of z_0 corresponding to the summit of the trajectory can now be determined from Table II by finding the corresponding values of B and Z which will satisfy this equation; a'_0 can then be determined. A is then known; hence C and X can be determined.

Digitized by Google

EXAMPLE 14.—Let it be required to determine the danger range for the service small arms fired from the ground with a target the height of a mounted man.

Assume $d = .30$ in.;
$w = 150$ grs.;
$V = 2700$ f. s.;
$\log C = 9.59040 - 10$;
$y_0 = 8$ ft.

From Eq. (100) we obtain,

$$b_0 z_0 = \frac{2y_0}{C^2} = \frac{2 \times 8}{[9.18080]} = 105.52.$$

Enter Table II with $V = 2700$ f. s., and in making the test for BZ locate the position of Z between thousands, then between hundreds as indicated below.

z_0	b_0	$b_0 z_0$
2000	.0122	24.40
3000	.0218	65.40
4000	.0350	140.00
3500	.0279	97.65
3700	.0306	113.22
3600	.0292	105.12

Interpolating we obtain,

$$z_0 = 3600 + \frac{105.52 - 105.12}{113.22 - 105.12} \times 100 = 3604.9.$$

With this we obtain from Table II,

$$a'_0 = .0509 + .049 \times 22 = .05101 = A.$$

With this value of A we obtain from Table II,

$$Z = 6300 + \frac{71}{137} \times 100 = 6351.8.$$

Whence

$$X = CZ = [9.59040] \times 6351.8 = 2473.4 \text{ ft.} = 824.5 \text{ yds.}$$

Digitized by Google

262. Formulas for Velocities less than 825 f. s.—Mayevski determined that the value of n is two for velocities less than 790 f. s., that is, the resistance of the air for such velocities varies as the square of the velocity. It may be shown that under this law the function A of Table II varies inversely as the square of the velocity, the function B' becomes independent of V, the function u varies directly as V, and the function T' varies inversely as V.

In computing Table II the value of n was assumed as two up to a velocity of 825 f. s., the error thus introduced beyond $V=790$ f. s. being small. A set of values for the functions of Table II, A, A', A'', B, T', etc., was thus computed for $V=800$ f. s. and tabulated on pages 14 to 16 of Table II under the heading $V=0$ to 825 f. s.

To obtain the values of these functions for velocities other than 800 f. s. it is evidently necessary to introduce as multipliers, the velocity ratios specified above. Formulas (55), (56), and (62) thus become, for velocities less than 825 f. s., when the values of A, T' and u_ω are taken from the first part of Table II,

$$\sin 2\phi = AC \times \left(\frac{800}{V}\right)^2; \quad \ldots\ldots \quad (101)$$

$$T = \frac{CT'}{\cos \phi} \times \frac{800}{V}; \quad \ldots\ldots \quad (102)$$

$$v_\omega = \frac{u_\omega \cos \phi}{\cos \omega} \times \frac{V}{800}. \quad \ldots\ldots \quad (103)$$

The formulas for C and its factors as previously given remain unchanged as do the following formulas commonly used with the above in ballistic computations:

$$\tan \omega = B' \tan \phi; \quad \ldots\ldots \quad (57)$$

$$a'_0 = A; \quad \ldots\ldots \quad (60)$$

$$y_0 = a''_0 \, C \tan \phi. \quad \ldots\ldots \quad (61)$$

Digitized by Google

EXAMPLE 15.—

Assume $d = 3$ ins.;
$w = 18$ lbs.;
$V = 750$ f. s.;
$\log C = 0.30503$.

Determine the value of ϕ, T, ω, and v_ω, for $X = 2000$ yds.

$$Z = \frac{X}{C} = \frac{6000}{[0.30505]} = 2972.6.$$

From Table II,

For $Z = 2972.6$
$A = .16424$;
$\log B' = .04022$;
$u = 696$;
$T' = 3.987$.

From Eq. (101)

$$\sin 2\phi = .16424 \times [0.30503] \times \left(\frac{800}{750}\right)^2;$$

$$\phi = 11^\circ\, 4.'8.$$

From Eq. (57)

$$\tan \omega = [.04022] \tan 11^\circ\, 4.'8;$$

$$\omega = 12^\circ\, 7.'5.$$

From Eq. (102)

$$T = \frac{[0.30503] \times 3.987}{\cos 11^\circ\, 4.'8} \times \frac{800}{750} = 8.7 \text{ seconds.}$$

From Eq. (103)

$$v_\omega = \frac{696 \cos 11^\circ\, 4.'8}{\cos 12^\circ\, 7.'5} \times \frac{750}{800} = 655 \text{ f. s.}$$

263. Curved and High-angle Fire.—The general formulas already deduced are applicable to the solution of all problems in curved and high-angle fire provided the integrating factor β, as given by Eq. (67), be used in the ballistic coefficient for firings at elevations greater than about 15° and the value of the altitude

Digitized by Google

factor, f_a, as given by Eq. (65) and the value of the reducing factor, γ, as given by (70) be used in high-angle fire.

High-angle Fire Ratios.—Problems in high-angle fire, with the low velocities commonly used, can, however, be much more simply solved, by means of a table of ratios such as that given in Artillery Circular M, Table IV, or in Hamilton's *Exterior Ballistics*, in which the relations between the usual ballistic elements are tabulated for certain values of ϕ. The tables are based on the quadratic law of resistance and hence are strictly accurate only for velocities less than 790 f. s. In the U. S. Service they are used in the computation of all mortar range tables, although the velocities for such tables vary by successive stages from 550 f. s. to 1300 f. s. No serious error arises in practice from this extension of the quadratic law because the range table values of ϕ, X, and T for the various velocities are obtained from actual firings and only the minor functions ϕ, v_ω, h, and y_0 are computed from the table of ratios. The table given in Hamilton's work on exterior ballistics comprises a distinct table for each value of ϕ varying by 1° from 45° to 70°, inclusive. With the values of ϕ and $V/\sqrt{C}$ as arguments, the corresponding values of

$$\frac{10T}{V}, \frac{10X}{V^2}, \omega, \frac{v_\omega}{V}, \log\frac{h}{X}, \text{ and } \frac{y_0}{X},$$

may be obtained from the table.

Computation of Elements of Table.—The values of X, T, v_ω, etc., in this table, for assumed values of ϕ and $V/\sqrt{C}$ are not computed by means of the general equations given in Art. 245, but are computed by quadratures. In this method the values of dt, dx, and ds, are expressed in terms of $d\theta$ and constants.

By taking successively small increments of θ, so that the mean value will apply in the equations without material error, successive increments of t, x, y, etc., are computed. The summation of these give the desired final values.

It is evident that this method avoids the error of the assump-

Digitized by Google

tion, $\cos^{n-1}\theta = \cos^{n-2}\phi$, made in Eq. (21) in connection with the integration of the general equations used in direct fire.

The integrating factor β, therefore, does not appear in the values for C when used in connection with the tables of high-angle fire ratios.

264. Zones in Mortar Fire.—In order to secure a great angle of fall for the attack of decks, and because the maximum range is secured at about that value, the lower limit of elevation for mortars in our service has been fixed at 45°. The upper limit has been fixed at 65° on account of irregularities in drift at angles above about 66°. Due to these limits of elevation, only a limited range can be secured with any selected velocity.

To cover the whole field of fire, it then becomes necessary to select a series of velocities each of which will cover a limited part of the field.

These concentric parts or belts are called zones.

In order that the field of fire may be effectively covered when one or more of the velocities falls below the expected values, and in order to avoid uncertainty and delay in loading when a target is approaching any zone limit, it is necessary that the successive zones should overlap a reasonable amount.

Range Table Data for High-angle Fire.—As previously stated mortar range tables in the U. S. Service are constructed from data obtained by actual firings. These firings are usually made with muzzle velocities extending from below the lowest to above the highest expected to be used in service, and with angles of elevation between 45° and 65°.

The following data are carefully ascertained and recorded for each round:

1. Projectile, kind and weight. The weight is always kept uniform.
2. Charge, kind of powder, lot and weight.
3. Quadrant elevation.
4. Maximum powder pressure as registered by pressure gauges. From this the probable muzzle velocity is obtained from curves

Digitized by Google

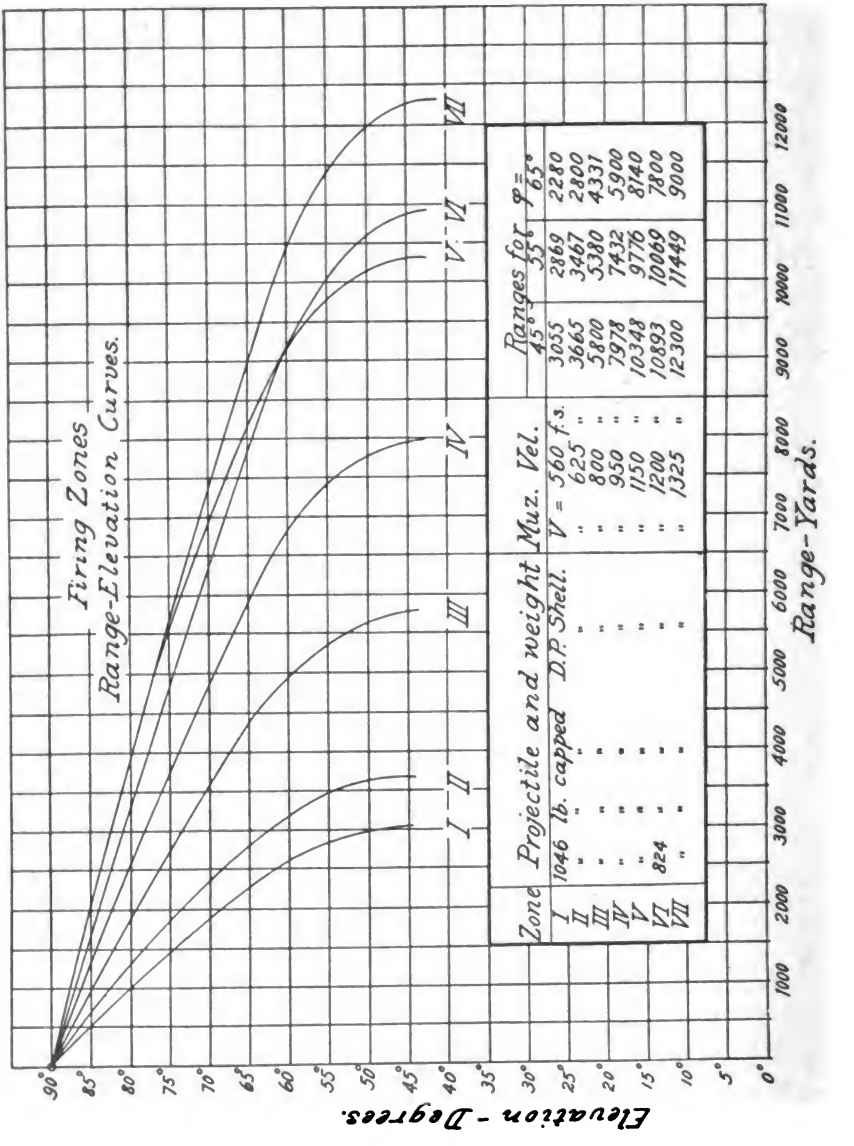

Zone	Projectile and weight	Muz. Vel.	Ranges for 45°	Ranges for 35°	Ranges for 65°
I	1046 lb. capped D.P. Shell.	V = 560 f.s.	3055	2869	2280
II	" " " "	" 625 "	3665	3467	2800
III	" " " "	" 800 "	5800	5380	4331
IV	" " " "	" 950 "	7978	7432	5900
V	" " " "	" 1150 "	10348	9776	8140
VI	824 " "	" 1200 "	10893	10089	7800
VII	" " "	" 1325 "	12300	11449	9000

FIG. 184.

Digitized by Google

of velocities and pressure made from data obtained in tests of powder.

5. Range.
6. Deviation.
7. Time of flight.
8. Wind, direction and velocity.
9. Barometer, thermometer and humidity.

Before the data thus obtained can be embodied in a range table the observed ranges must be corrected for the effect of any abnormal condition which may have existed at the time each shot was fired.

*Formulas for Correction of Observed Ranges.**

1. For change in C due to variation of δ_1/δ from unity, or due to any other cause except wind,

$$\Delta X = X \times \frac{\Delta C}{C}\left\{1 - \frac{gX}{V^2 \sin 2\phi}\right\}. \quad . \quad . \quad . \quad (104)$$

2. For a wind component of W_x miles per hour in the direction of the line of fire

$$\Delta X = \pm 2 W_x T^{5/4}\left\{1 - \frac{gX}{V^2 \sin 2\phi}\right\}. \quad . \quad . \quad . \quad (105)$$

3. For a variation in V from the desired value

$$\Delta X = \frac{2gX^2}{V^3 \sin 2\phi} \times \Delta V. \quad . \quad . \quad . \quad . \quad . \quad . \quad . \quad . \quad (106)$$

265. Range-Elevation and Range-Velocity Curves.—After the ranges have been standardized by means of the corrections specified above all ranges corresponding to the same muzzle velocity are plotted as a function of ϕ, a mean curve is then drawn for each set of points representing the rounds standardized to the same velocity.

Fig. 184 shows such a set of curves. The 90° point at zero range is one common to all the curves.

* For deductions of these formulas see Hamilton's Ballistics.

Digitized by Google

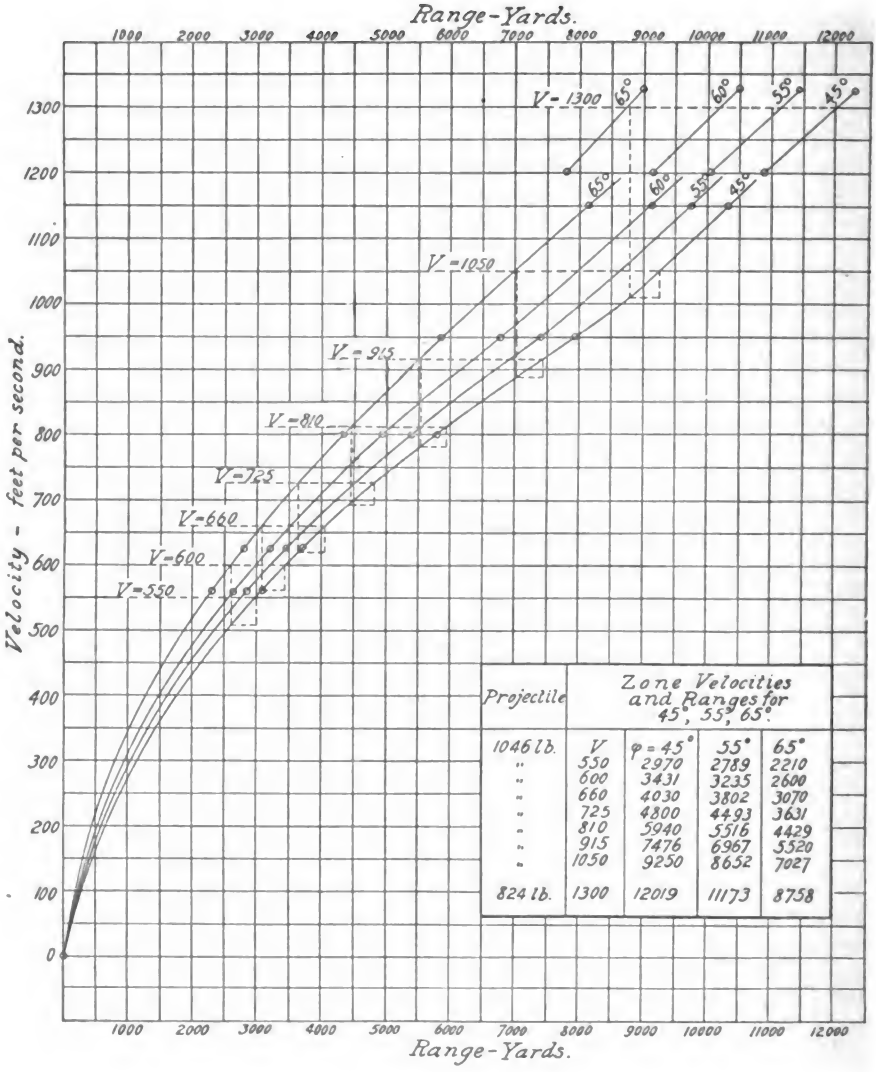

Projectile	Zone Velocities and Ranges for 45°, 55°, 65°			
1046 lb.	V	φ = 45°	55°	65°
"	550	2970	2789	2210
"	600	3431	3235	2600
"	660	4030	3802	3070
"	725	4800	4493	3631
"	810	5940	5516	4429
"	915	7476	6967	5520
"	1050	9250	8652	7027
824 lb.	1300	12019	11173	8758

FIG. 185.

Digitized by Google

After these curves have been constructed, the values of the ranges are taken therefrom for successive values of ϕ differing by 5° and plotted as a function of the velocity as shown in Fig. 185. On account of the reduced scale they are shown in this figure for values of ϕ differing by 10°. From an examination of these curves suitable zone velocities and their resultant range overlaps can be determined as indicated on the figure.

Zone Velocities.—The zone velocities selected should fulfill as far as practicable the following conditions:

1. Steadiness of flight must be preserved, hence V cannot be taken below a certain value.

2. The dead space surrounding the mortar should be made as small as possible by reducing V as much as is consistent with requirement 1.

3. A muzzle velocity greater than that corresponding to the maximum powder pressure prescribed for the type of mortar in use should not be selected.

4. The field of fire should be effectively covered to the extreme range desired.

5. The overlaps of zones should not fall below reasonable values.

6. Considerations of economy, storage facilities, and freedom from confusion in loading require that the following additional conditions should be met in the selection of zones.

(*a*) There should be but few different sized packages of powder.

(*b*) Each charge should contain one of the packages primed at both ends for use as a base charge.

(*c*) No charge should contain more than a limited number of packages.

266. Conditions for 12-in. Steel Mortar.—With the 12-in. steel mortar the above conditions are met as follows:

The lowest velocity that will give steadiness in flight is about 550 f. s. The shortest possible range as determined by this as the minimum velocity, and 65° as the maximum elevation, is about 2200 yards. The extreme range is about 12,000 yds. To secure a range beyond about 9250 yds. without exceeding the permissible

Digitized by Google

powder pressure it is necessary to resort to the use of a lighter projectile.

Eight zones are necessary in order that the field of fire may be effectively covered. The zone overlaps are about 400 yds. except between the two outer zones, where the overlap is about 500 yds. The increased overlap is required here on account of the change in the projectile.

A set of zone velocities, the range limits for each zone, and the amounts of the zone overlaps may be seen on the Range Velocity Curves of Fig. 185.

Assuming 550 f. s. as the lowest velocity meeting the requirement of steadiness of flight, it is evident from the curves that the minimum range obtainable with this velocity is 2210 yds., and that the maximum is 2970 yds. These, then, are the range limits for the first or inner zone.

The zone velocity to be selected for the second zone should be such as to give the desired overlap. Assuming this to be 400 yds., the selected velocity should be such as to give a minimum range of $2970-400=2570$ yds.

The required velocity is determined from the figure by drawing a vertical line at this range and noting the velocity corresponding to the point where it intersects the 65° Elevation Velocity Curve. The velocity thus indicated is about 595 f. s.

In adjusting the zone velocities to meet the requirements of item 6 as to the number and size of packages for the various powder charges, this velocity was changed to 600 f. s., thus reducing the overlap to 370 yds. The other zone velocities were successively selected and adjusted in a manner similar to that just described.

267. EXAMPLE 16.—Assume a round to have been fired from a mortar under the following conditions:

$d=12$ ins.;
$w=1046$ lbs.;
$V=805$ f. s.;
$\phi=45°$;

Digitized by Google

$X = 5832$ yds.;
$T = 34$ secs.;
Bar. $= 29.4$ in.;
Ther. $= 70°$ F.

Rear wind of 8 miles an hour.

Determine the corrected range for range table conditions with $V = 800$ f. s.

From atmosphere table $\delta_1/\delta = 1.03$.

From Eq. (104) for change in C due to change in δ_1/δ,

$$\Delta X = -17496 \times .03 \left\{ 1 - \frac{32.16 \times 17496}{(805)^2 \sin 90°} \right\} = -69 \text{ ft.} = -23 \text{ yds.}$$

From Eq. (105) for wind effect,

$$\Delta X = -2 \times 8 \times 34^{5/4} \left\{ 1 - \frac{32.16 \times 17496}{(805)^2 \sin 90°} \right\} = -173 \text{ ft.} = -58 \text{ yds.}$$

From Eq. (106) for change in V,

$$\Delta X = -\frac{2 \times 32.16 \times (17496)^2 \times 5}{(805)^3 \sin 90°} = -189 \text{ ft.} = -63 \text{ yds.}$$

Corrected Range $= 5832 - 23 - 58 - 63 = 5688$ yds.

EXAMPLE 17.—Assume the following data for the 75 *mm* sub-caliber tube and 15 lbs. projectile to have been taken from the Range-Elevation Curves.

$\phi°$	V f. s.		
	500	600	700
	X yds.	X yds.	X yds.
45	2200	3670	4010
50	2160	3010	3925
55	2050	2860	3730
60	1870	2620	3425
65	1620	2290	3010

Digitized by Google

Construct the range velocity curves and from them determine the required number of zones and the corresponding muzzle velocities to cover all ranges from 1620 to 4000 yds. with a uniform overlap of 200 yds.

268. EXAMPLE 18.—Assume the following data to be taken from the Range Velocity Curves of Fig. 185.

$\phi = 45°$;

$V = 810$ f. s.

$X = 5940$ yds.

Compute the values of ω, v_ω, and T, for use in the mortar range table. From the above data we obtain,

$$\frac{10X}{V^2} = \frac{10 \times 17820}{(810)^2} = .2716.$$

From the table of high-angle fire ratios we obtain under the heading $\phi = 45°$.

$$\omega = 48° \ 28'.$$

$$\frac{v_\omega}{V} = .88;$$

whence

$$v_\omega = 713 \text{ f. s.};$$

$$\frac{10T}{V} = .4238.$$

Whence

$$T = 34.3 \text{ secs.}$$

Computation of ω and v_ω in Absence of Tables.—In the absence of tables the values of ω and v_ω may be computed as follows:

$$\tan \omega = \frac{gT^2}{X} - \tan \phi; \quad . \quad . \quad . \quad . \quad . \quad . \quad . \quad (107)$$

$$v_\omega = \frac{X^2}{VT^2 \cos \phi \cos \omega}. \quad . \quad . \quad . \quad . \quad (108)$$

Digitized by Google

If the time of flight was not observed it may, in the absence of tables, be computed by the formula

$$T=\frac{2V\sin\phi}{g_1}; \quad \ldots\ldots\ldots \quad (109)$$

in which

$$g_1=32.16+8\left[1-\frac{gX}{V^2\sin 2\phi}\right]. \quad \ldots \quad (110)$$

269. Computation of Range Table without Firings.—If it becomes necessary to compute a mortar range table in the absence of experimental firings, it is necessary to take $1/\cos\phi$ as a reducing factor in the value for C. This takes the place of the value for γ as used in the formula for direct fire. As explained in Art. 263, the factor β will not appear since we are to use the table of high-angle fire ratios. The range table value of C then becomes

$$C=f_a\frac{w\cos\phi}{cd^2}; \quad \ldots\ldots \quad (111)$$

in which

$$f_a=\frac{1}{1-.000027h},$$

as given by Eq. (65).

The value of h in this equation may be found from $\log h/X$, which in turn is found from the table of ratios by the use of a value of $V/\sqrt{C}$ in which f_a is taken as unity as a first approximation in computing the value of C.

The value of $\frac{10X}{V^2}$ is also determined for the same value of $V/\sqrt{C}$. The value of X thus determined and substituted in the value of $\log h/X$ gives the value of h, hence f_a. If greater accuracy is desired the value of h may be redetermined after f_a has been incorporated in C and new values of $\log h/X$ and of $\frac{10X}{V^2}$ have been determined from the resultant value of $V/\sqrt{C}$. A more accurate value of f_a is then redetermined from the new value of h.

Digitized by Google

The necessity for the use of $1/\cos\phi$ as a reducing factor has been determined from firings with capped projectiles. The value of this factor would probably be somewhat different for uncapped projectiles.

EXAMPLE 19.—

Assume $d = 12$ ins.;
$w = 1046$ lbs., capped, standard form of head;
$V = 600$ f. s.

Determine the values of X, T, ω, and v_ω, for $\phi = 45°$.

Assuming $f_a = 1$ as a first approximation, we have

$$C_1 = \frac{w \cos\phi}{cd^2} = \frac{1046 \times \cos 45°}{144} = [0.71065];$$

$$\frac{V}{\sqrt{C_1}} = \frac{600}{[0.35533]} = 265.$$

From table of high-angle ratios we obtain for this value of $V/\sqrt{C}$

$$\frac{\log h}{X} = 9.213;$$

$$\frac{10X}{V^2} = .289.$$

Whence

$$X = \frac{(600)^2 \times .289}{10} = 10404 \text{ ft.}$$

Hence $h = [9.213] \times 10404 = 1699$ ft.
Whence

$$f_a = \frac{1}{1 - .000027h} = [0.02041];$$

$$C_2 = f_a C_1 = [0.73106];$$

$$\frac{V}{\sqrt{C_2}} = \frac{600}{[0.36553]} = 258.6.$$

Digitized by Google

On account of the small change in $V/\sqrt{C}$, no second approximation for the value of h is considered necessary

From table of high-angle fire ratios we obtain for $V/\sqrt{C} = 258.6$.

$$\frac{10X}{V^2} = .2891.$$

Whence

$$X = 10408 \text{ ft.} = 3469 \text{ yds.}$$

$$\frac{10T}{V} = .431.$$

Whence

$$T = 25.9 \text{ seconds;}$$
$$\omega = 46^\circ\ 54';$$

$$\frac{v_\omega}{V} = .933.$$

Whence

$$v_\omega = 560 \text{ f. s.}$$

270. Perforation of Armor.—The following formula gives the perforation of deck steel by mortar projectiles. It will be noted that this formula differs from that for Krupp armor given by Eqs. (94) and (95).

$$t^2 = [0.83500 - 10]\frac{wv^3_\omega}{d} \times F. \quad . \quad . \quad . \quad . \quad . \quad (112)$$

In which

$$F = \sec^3 \frac{\alpha}{2} \cos^2 \alpha; \quad . \quad . \quad . \quad . \quad . \quad . \quad . \quad . \quad (113)$$

$$\alpha = 90^\circ - \omega. \quad . \quad . \quad . \quad . \quad . \quad . \quad . \quad . \quad . \quad (114)$$

The following are the values of F in terms of ω.

ω	F	ω	F
45	.634	70	.925
50	.708	75	.957
55	.773	80	.982
60	.832	85	.995
65	.883	90	1.000

Digitized by Google

EXAMPLE 20.—

Assume $d = 12$ in.;
$w = 1046$;
$\omega = 48^\circ\ 30'$;
$v_\omega = 714$ f. s.

Determine the perforation of deck plate armor.

From the table given above

$$F = .634 + .074 \times \frac{3.5}{5} = .6858.$$

Whence

$$t^2 = [0.83500 - 10]\frac{1046 \times (714)^3}{12} \times .6858;$$
$$t = 3.86 \text{ ins.}$$

Deviations Due to Drift and Wind.—In curved and high-angle fire the deviations due to drift and to a wind component perpendicular to the line of fire are computed by the formulas already discussed under direct fire. These are given by Eqs. (93) and (92).

ACCURACY AND PROBABILITY OF FIRE

271. Accuracy.—The accuracy of a gun at any range and under any given conditions of loading and firing is determined as follows:

A number of shots are fired under the given conditions, care being exercised to make the circumstances of all the rounds as nearly alike as possible. The point of fall of each shot is plotted on a chart or marked on the target when practicable. The target may be either horizontal or vertical. We will assume a vertical target.

The coordinates x and y of each shot-mark, or impact, are measured with respect to two rectangular axes X and Y drawn through an assumed origin conveniently placed. The sum of the abscissas divided by the number of shots, which is the algebraic mean abscissa, and the sum of the ordinates divided by the same

Digitized by Google

number, the mean algebraic ordinate, are the coordinates of the mean point of fall, called the *center of impact.*

A representation of a target of 8 shots from the 10-in. gun is shown in Fig. 186. The range was 3000 yds. The center of impact is at the center of the crossed circle.

The distance, in the direction of the axis of Y, of any impact from the center of impact is the vertical deviation for the shot. The deviation is plus if the shot-mark lies above the center of impact, and minus if below. The distance of the shot-mark from the center of impact in the direction of the axis of X is the lateral

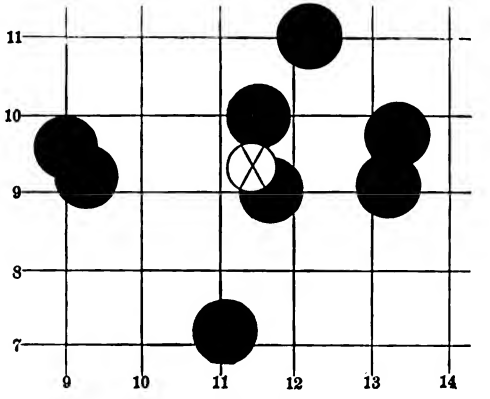

FIG. 186.

deviation of the shot, plus if to the right, minus if to the left. The numerical sum of the horizontal deviations divided by the number of shots is the mean horizontal deviation. The mean vertical deviation is similarly obtained from the numerical sum of the vertical deviations.

The actual distance of each shot from the center of impact is the *absolute deviation* for the shot, and the mean of the absolute deviations is the *mean absolute deviation* for the group.

The mean absolute deviation is usually computed from the mean horizontal and vertical deviations by taking the square root of the sum of their squares. The value computed in this more con-

Digitized by Google

venient way differs slightly from the mean of the absolute deviations.

By comparing the mean absolute deviations of different groups of shots we may arrive at the comparative accuracy of different guns or of the same gun under different conditions of loading or firing.

The measure of the ability of a gunner is the absolute distance of the center of impact of the group of shots from the point of the target aimed at.

EXAMPLE 27.—In a test of the 10-in. gun for accuracy 8 shots were fired at a vertical target distant 3000 yds. The coordinates of the shots measured from a point on the target, see Fig. 186, are given below. Find the center of impact and the mean absolute deviation.

No. of Shot.	Coordinates, Ft.		Deviations.	
	Horizontal.	Vertical.	Horizontal.	Vertical.
1	12.20	11.00	0.80	1.65
2	11.50	9.90	0.10	0.55
3	13.30	9.75	1.90	0.40
4	11.70	9.10	0.30	0.25
5	13.20	9.15	1.80	0.20
6	9.00	9.55	2.40	0.20
7	11.05	7.15	0.35	2.20
8	9.25	9.20	2.15	0.15
8	91.20	74.80	9.80	5.60
	11.40	9.35	1.23	0.70

The coordinates of the center of impact are: Horizontal, 11.40 ft.; vertical, 9.35 ft.

The mean deviations from the center of impact are: Horizontal, 1.23 ft.; vertical, 0.70 ft.

The mean absolute deviation $= \sqrt{1.23^2 + 0.70^2} = 1.42$ ft.

Digitized by Google

272. Probability of Fire.*—Suppose that a large number of shots have been fired at a target, under conditions as nearly alike as possible, and that the center of impact of the group of shot-marks on the target has been determined.

If we count the number of impacts that lie within any given distance from the center of impact and divide this number by the whole number of shots, the resulting fraction will express the probability that any shot will fall within the given distance.

Probability is thus always expressed as a fraction of unity. If

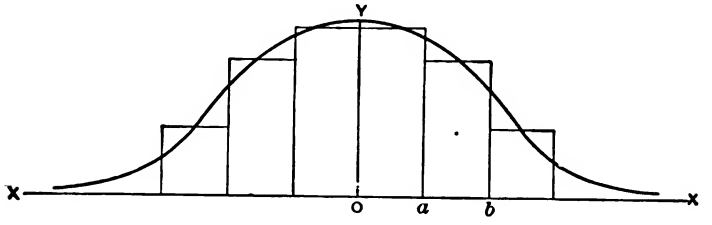

FIG. 187.

an event may happen in a ways and may fail in b ways, the probability of its happening is $\frac{a}{(a+b)}$, and of its failing to happen, $\frac{b}{(a+b)}$. The sum of these two fractions, unity, represents the certainty that the event will either happen or fail. Unity therefore indicates certainty.

By examination of many groups of shots we learn that as we approach the center of impact the impacts become more numerous, also that both the vertical and horizontal deviations are as likely to be on one side of the center of impact as on the other.

We also learn that the vertical and horizontal deviations are entirely independent of each other, and that any vertical deviation is just as likely to occur with one horizontal deviation as with an-

* The greater part of the discussion of the subject of Probability of Fire follows the method set forth by Professor Philip R. Alger, U. S. Navy, in an article appearing in the *Proceedings of the U. S. Naval Institute*, Whole No. 108, 1903, and in the *Journal of the United States Artillery*, March-April, 1904.

Digitized by Google

other. This makes it necessary in considering probabilites that we consider the horizontal and vertical deviations separately.

Let O, Fig. 187, represent the center of impact of any group of shots used as a criterion. Considering only lateral deviations, lay off on the axis of X successive distances representing lateral deviations.

Count the number of impacts on the target that lie within the distance Oa to the right of the center of impact. Erect at a an ordinate of such length that the area of the rectangle between the ordinate and the axis of Y represents the number of impacts found within the distance.

Proceed in the same manner for the distance ab and for the other distances represented by the other divisions of the axis of X.

The area of any rectangle divided by the area of all the rectangles will then be the probability that any shot will lie within the limits of deviation between the limiting ordinates. As the total area of all the rectangles is a constant, the probabilities with respect to deviations within any limits represented by different portions of the axis of X are proportional to the rectangles erected on those portions.

273. Probability Curve.—If we consider that a very large number of shots have been fired and make the rectangles very small, so that the base of each becomes dx, we obtain the area in the figure bounded by the curve and the axis of X.

The curve is called the *probability curve* and the area under any part of it divided by the whole area is the probability that any shot will deviate from the center of impact within the limits between the limiting ordinates.

If we consider the whole area under the curve as unity, the area under any part of the curve will represent at once the probability of a deviation within the limits between the limiting ordinates.

As the ordinates may be considered as areas infinitely small in width any ordinate will represent the probability of a specific deviation represented by the abscissa; that is, it will represent the proba-

Digitized by Google

bility that a shot will fall *at a specific distance* on either side of the center of impact. The area of the ordinate being infinitely small the chance that a shot will have any specific deviation is infinitesimal and not worthy of consideration. If we were dealing with events that could happen only in a finite number of ways, each ordinate would be an area that would have a finite relation to the sum of all the ordinates or areas, and would then represent the probability of the happening of a particular event.

Characteristics.—The curve is symmetrical with respect to the axis of Y, since the probability is the same for equal deviations on either side. The ordinate has its greatest value at the center of impact, since the center of impact is the mean position of all the shots and the probability of the deviations increases continuously as the deviations are less. The curve is theoretically an asymptote to the axis of X, since all deviations between $+\infty$ and $-\infty$ are possible. Practically it may be considered as meeting the axis of X at a short distance from the center, since with events happening under the same conditions large variations from the mean are not to be expected.

While the curve as deduced applies to the deviations, or errors, of shot, the laws that are expressed by it are general in character and apply to accidental errors of any kind.

274. Equation of the Probability Curve.—The equation of the curve must be such as to express the characteristics just enumerated. Deduced by means of the theory of accidental errors, taking as its basis the axiom that the arithmetical mean of observed values of any quantity, the values occurring under similar circumstances, is the most probable value of the quantity, the equation takes the form

$$y=\frac{1}{\pi\gamma}e^{-x^2/\pi\gamma^2}, \quad \ldots\ldots \quad (115)$$

in which γ is the mean error, in our case the mean deviation, and $e=2.71828$ the base of the Napierian system of logarithms. The factor $1/\pi\gamma$ is introduced to make the whole area under the curve

Digitized by Google

unity, $\left(\int_{-\infty}^{+\infty} e^{-x^2/\pi\gamma^2}dx = \pi\gamma\right)$, thus obviating the necessity of dividing a partial area by the whole area whenever a probability is to be computed.

As stated above, the area under any part of the curve divided by the whole area under the curve is the probability that the deviation of any shot will lie between the limits of deviation represented by the part of the axis of X between the limiting ordinates. The area under the curve is $\int ydx$, and since we have introduced into y in Eq. (115), the factor required to make the whole area unity, the integral taken between limits will represent at once the probability for any limit of deviation.

Thus the probability that any shot will have a deviation less than the numerical value Oa, Fig. 187, is

$$P = 2\int ydx = \frac{2}{\pi\gamma}\int_0^a e^{-x^2/\pi\gamma^2}dx, \quad . \quad . \quad . \quad . \quad (116)$$

the factor 2 appearing since the ordinate at the end of the distance Oa occurs at equal distances on either side of the center.

The values of P in this equation for various values of a and γ are arranged in the following table with a/γ as an argument. Knowing the mean lateral or vertical deviation γ, to find the probability of a shot striking within the distance a to the right or left of the center of impact, it is only necessary to take from the table the value of P that corresponds to the argument a/γ.

275. Illustration of the Use of the Table.—At Krupp's proving ground at Meppen, 50 shots were fired from a 12-cm. siege gun at 5° elevation, giving a mean range of 2894.3 meters. The points of fall were marked on the ground and their distances from assumed axes measured. The center of impact was thus determined. The lateral deviations were measured from the center of impact. The mean lateral deviation was 1.07 meters.

We will find from the table the probability that any shot should have a deviation of less than one meter from the center of impact.

Digitized by Google

PROBABILITY OF A DEVIATION LESS THAN a IN TERMS OF THE RATIO a/γ

$\frac{a}{\gamma}$	P	$\frac{a}{\gamma}$	P	$\frac{a}{\gamma}$	P	$\frac{a}{\gamma}$	P
0.1	0.064	1.1	0.620	2.1	0.906	3.1	0.987
0.2	0.127	1.2	0.662	2.2	0.921	3.2	0.990
0.3	0.189	1.3	0.700	2.3	0.934	3.3	0.992
0.4	0.250	1.4	0.735	2.4	0.945	3.4	0.994
0.5	0.310	1.5	0.768	2.5	0.954	3.5	0.995
0.6	0.368	1.6	0.798	2.6	0.962	3.6	0.996
0.7	0.424	1.7	0.825	2.7	0.969	3.7	0.997
0.8	0.447	1.8	0.849	2.8	0.974	3.8	0.998
0.9	0.527	1.9	0.870	2.9	0.979	3.9	0.998
1.0	0.575	2.0	0.889	3.0	0.983	4.0	0.999

The deviation is $a=1$. The mean lateral deviation is $\gamma=1.07$. Therefore, $a/\gamma=1/1.07=0.935$, and from the table, $P=0.544$, the probability that any shot will fall within 1 meter of the center of impact.

For 50 shots the probability is that $P\times 50$ shots will be found within this limit of deviation, $P\times 50=0.544\times 50=27$. This number of shots actually fell within the limit of deviation of 1 meter in the experiment.

Making $a=2$ meters, $a/\gamma=2/1.07=1.87$, $P=0.864$, and $50\times 0.864=43$. The probability is that 43 shots out of the 50 will be found within 2 meters, laterally, of the center of impact. Forty-three shots were actually so found.

276. Probable Zones and Rectangles.—Since P is the probability that the deviation of any shot will not be greater than a, $100P$ represents the number of shots in 100 that will probably fall on both sides of the mean impact within the limit of the deviation a. It is, therefore, the percentage of hits that will probably be found in the zone defined by the limits at the distance a in both directions from the center of impact. From the table we find that for $P=0.25$, or $100P=25\%$, $a/\gamma=0.4$, or $a=0.4\gamma$. The half width of the zone

Digitized by Google

that probably contains 25% of hits is, therefore, 0.4γ and the full width of the zone is $2a = 0.8\gamma$.

This zone is called the 25% *zone*.

Similarly for the zone that probably contains 50% of hits, the 50% *zone*, $a = 0.846\gamma$ and $2a = 1.69\gamma$.

Knowing the mean deviation, vertical or horizontal, we may at once from these relations find the width of either zone.

The 50% zone is also called the *probable zone* and its half width is the *probable error*, or deviation, since it is the error that is just as likely to be exceeded as not to be exceeded.

The 25% *rectangle* is the rectangle formed by the intersection of the 50% zones for lateral and vertical deviations. The probability of each of these zones being $\frac{1}{2}$ the probability of the rectangle will be $\frac{1}{2} \times \frac{1}{2}$.

Similarly *the* 50% *rectangle* is that formed by the intersection of the zones for each of which $P = \sqrt{\frac{1}{2}}$. It is also called *the probable rectangle.*

Comparison of the Accuracy of Guns.—The rectangles of probability may be used in comparing the accuracy of different guns. The probable rectangle is generally used when this method is employed.

For small arms and high-powered guns using direct fire the probable rectangle is taken in the vertical plane, since the targets for these guns usually offer a vertical front.

For guns using curved or high-angle fire the probable rectangle is taken in the horizontal plane.

277. Probability of Hitting any Area.—The probability of hitting any area whose width is $2b$ and whose height is $2h$, and which is symmetrical with respect to the center of impact, as the area *abcd*, Fig. 188, assuming O as the center of impact, is equal to the product of the two values of P taken from the table with b/γ_x and h/γ_y as arguments, the subscripts indicating lateral and vertical deviations.

If the center of impact lies in the given area, or on its edge, the probability of hitting the area is readily obtained by dividing the

Digitized by Google

area into parts by lines passing through the center of impact and taking the sum of the probabilities of hitting the parts.

Thus the probability of hitting the area *efgh*, Fig. 188, is the sum of the probabilities of hitting the four rectangles into which it is divided by lines through the center of impact. The probability for any one of these rectangles is $\frac{1}{4}$ the probability for the area, symmetrical to the center of impact, that is formed by four rectangles equal to the one considered.

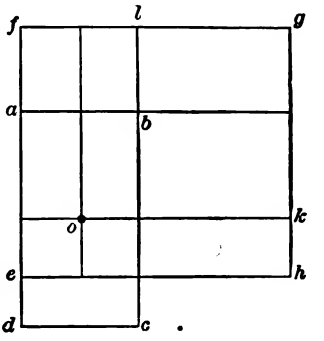

FIG. 188.

If the center of impact lies wholly without the area, the probability of hitting the area is obtained by extending the area to include the center of impact and then, taking the difference of the probabilities for the whole area and for the part added to the original area.

Thus the probability for the rectangle *bg* is equal to the probability for the rectangle *og* minus the sum of the probabilities for the rectangles *ol* and *bk*.

Digitized by Google

CHAPTER X

PROJECTILES AND ARMOR

278. Classification.—Projectiles are classified as shot, shell and case shot. Except in small arms and machine guns, solid shot are no longer used except for experimental firings or target practice. The term shot is now applied to the small cavity shell. The cavities of shot and shell are filled with a bursting charge that, by means of a fuse, may be exploded at a selected time. The case shot consists of a number of solid shot held together by an enclosing envelope which may be ruptured by the shock of discharge or by a bursting charge. Case shot consists of grape, canister and shrapnel. The envelopes of grape and canister are ruptured by the shock of discharge and the envelope of shrapnel is ruptured by a bursting charge.

The grape shot is no longer used and the canister is seldom used, both having been displaced by the shrapnel.

In addition to the above classification, projectiles known as grenades are thrown by the hand or propelled by the rifle, and larger projectiles of similar type, called bombs, are propelled at low velocities by trench mortars or other forms of bomb throwers. Grenades and bombs depend for their effects entirely upon their high explosive charges.

Old Forms of Projectiles.—In the old, smooth-bore cannon, round cast-iron shot and shell of diameter nearly equal to the caliber of the gun were used. The grape, canister, and shrapnel for these guns are shown in Figs. 189 and 190. The shrapnel was invented about 1803 by Colonel Shrapnel of the British Army. In its first form it contained a number of lead balls with loose powder in the interstices. The walls of the shell were made thick to resist deformation by the movement of the contained balls. In its later

Digitized by Google

forms the spaces between the balls were filled with melted sulphur, and a chamber for the bursting charge was provided as shown. By this arrangement the walls were no longer subject to the impact from the loose balls, and, therefore, could be made thinner, thus providing room for a greater number of bullets. The confining

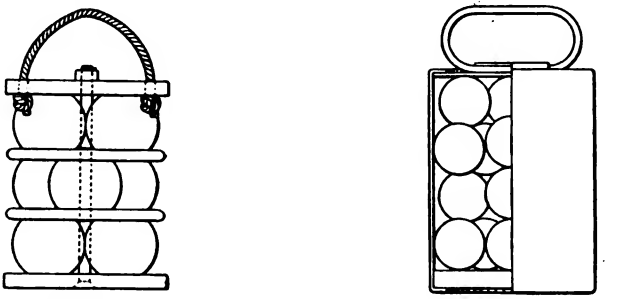

Grape. FIG. 189. Canister.

of the bursting charge in a chamber made its explosive effect greater and permitted a reduction in its weight.

Chain shot and bar shot, made up of two projectiles connected by a chain or bar, were occasionally used in early times; and incen-

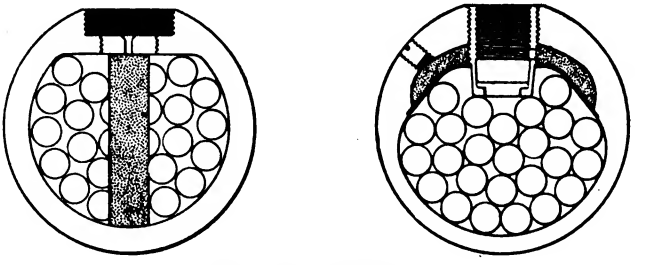

FIG. 190.—Shrapnel.

diary shell, called *carcasses,* which were ordinary shell filled with combustible material, the flames from which issued through holes drilled through the walls of the shell.

The introduction of rifling brought about the use of elongated projectiles of increased weight. The capacity of the gun in weight

Digitized by Google

of metal thrown was largely increased and much greater accuracy of fire was obtained.

For the projectiles for the muzzle-loading rifled cannon some

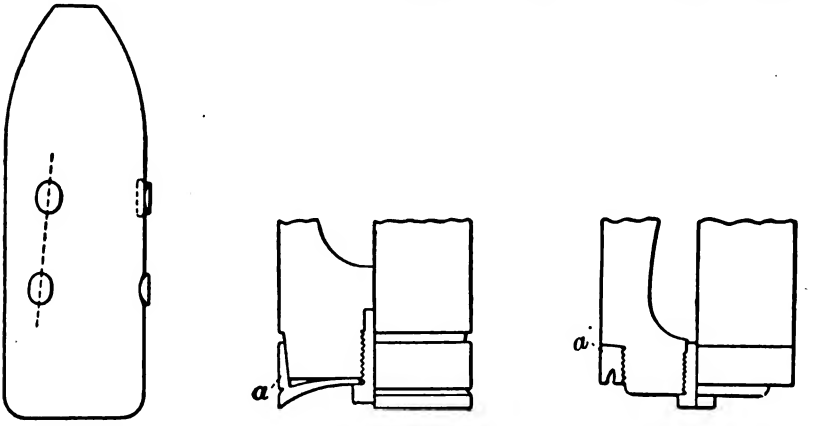

Studded. Eureka. Butler.

FIG. 191.

device was necessary to cause the projectile to take the rifling. The several devices that were employed are shown in Fig. 191.

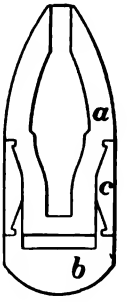

FIG. 192.

FIG. 193.

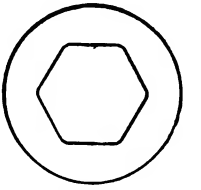

FIG. 194.

The studs on the projectile shown in the first figure were fitted into the grooves of the rifling as the projectile was inserted at the muzzle. In the other projectiles shown the parts *a* are of brass,

Digitized by Google

and in firing were expanded outward into the rifling by the pressure of the powder gases. Other means that were employed are shown in Figs. 192, 193 and 194.

Fig. 192 shows the Hotchkiss projectile. The parts *a* and *b* are of iron and are held apart by the ring of lead *c*. The gas pressure acting on the part *b* forced the lead outward into the rifling.

Fig. 193 shows the Whitworth projectile. The bore of the Whitworth gun was a twisted prism of hexagonal cross-section as shown in Fig. 194. The projectile was fashioned to fit the bore, its sides being provided with surfaces of a similar prism.

279. Modern Projectiles. Banding.—With the introduction of breech loading in arms of all kinds the problem of giving rotation to the projectile was much simplified. As the chamber of the gun is larger than the bore, a projectile provided with a soft metal band, 4, Fig. 195, of diameter larger than the diameter of the bore, may be inserted through the chamber. On the explosion of the charge the pressure causes the sloping ends 6, Fig. 196, of the lands of the

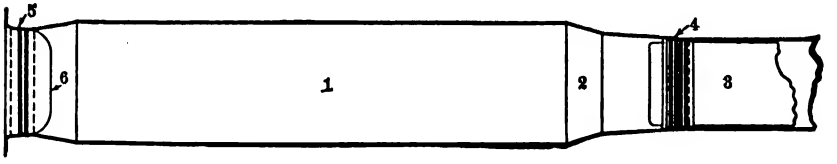

FIG. 195.

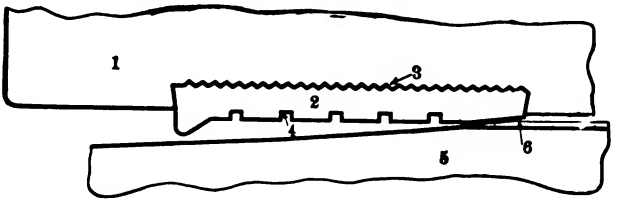

FIG. 196.

rifling to force their way through the rotating band, causing the band to conform in shape to the section of the rifling, and assuring the proper rotation in the projectile. As the band completely fills

Digitized by Google

the cross-section of the bore it serves also as a check to prevent the escape of gas past the projectile, and, in addition, it serves to center the projectile in the bore, and to determine a fixed position of the projectile when rammed into the gun.

The banding of projectiles is effected by cutting an undercut groove in the projectile near its base as shown at 3 in Fig. 197, and

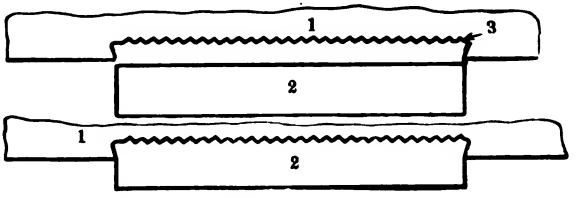

FIG. 197.

forcing a band of copper into this groove by means of a steam hammer or hydraulic press. The inside diameter of the rough band is of such a dimension, that when the band is heated for assembling it can be slipped over the base of the projectile to its place around the undercut groove as shown in the figure. The hammer or press is provided with semi-circular dies of the proper radii. Blows of the hammer or pressure of the press applied through the dies to the circular band force it solidly into the undercut groove. Before applying the band the bottom of the undercut groove is knurled or roughened with chisel marks to prevent rotation of the band on the projectile when the gun is fired. After being forced into the undercut groove, the outside of the band is machined to the proper dimensions. In the large projectiles several grooves, as shown in Fig. 196, are cut in the band to diminish the resistance to forcing and to provide spaces for the metal displaced by the rifling.

The width of bands was formerly one-eighth of the diameter of the projectile, but it was found that projectiles equipped with these bands sometimes failed to get the full rotation when fired from guns that were considerably eroded. This was especially so in guns with high-muzzle velocities. Trial showed that projectiles equipped with wider bands still received full rotation when fired from the

Digitized by Google

same guns. It was, therefore, decided that the life of the guns would be substantially increased by increasing the width of the bands. The width of bands is now one-third of the diameter of the projectile for all seacoast projectiles above 5 ins. in caliber, except 12-in. mortar projectiles, and one-sixth of the diameter for other projectiles.

280. Form of Projectiles.—Except canister, which is practically obsolete, all modern projectiles are of the same general shape, a cylindrical body with ogival head, as shown in Fig. 198. The

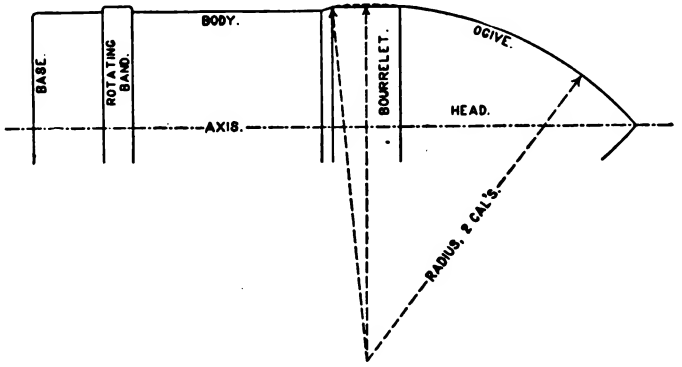

FIG. 198

ogive is struck from a center on a line perpendicular to the axis of the projectile and with a radius usually expressed in calibers. The radius was formerly about 2.0 calibers for all projectiles, but it was found in recent years, that a marked reduction in air resistance and increase in range could be obtained by increasing the radius of the ogive to 7 calibers. Projectiles with these sharp points do not, however, have the same capacity for piercing armor as projectiles with blunter heads even though the former are provided with caps. The increased length of the ogive for armor-piercing projectiles is, therefore, struck on the soft metal cap, instead of on the main part of the projectile, which retains the same radius of ogive, about 20 calibers, as formerly.

The form of the long-pointed cap is shown in Figs. 199 and 200.

Digitized by Google

The cap proper shown at 2, performs its function better when made nearly flat in front.

The front part 3, extends the cap to a rounded point on a radius of 7 calibers, thus reducing the air resistance.

In some armor-piercing projectiles the head consists of two ogives, one with a radius of 2 calibers extending forward from the body and joining the second, which with a radius of .75 caliber extends to the point. The armor piercing capacity is increased by this arrangement. The A. P. shot, shown in Fig. 199, is constructed in this manner.

In the case of cast-iron projectiles for target practice with seacoast guns, the radius of ogive is 7 calibers and the long point is an integral part of the projectile. In the case of field gun projectiles, the radius of ogive has not been increased beyond 2.5 calibers partly on account of the small increase in range that would be obtained with these low-velocity guns and partly on account of the difficulty in designing time fuses to conform to the sharp points.

281. Projectiles for Seacoast Guns.—Seacoast guns 5 ins. and above in caliber use capped armor-piercing shot or shell for service and cast-iron shell for target practice.

The shot has a cavity smaller than the shell and, therefore, uses a smaller bursting charge but has greater penetrative power. Solid shot are not used except for target practice with some minor-caliber guns.

Shell were formerly cast in one piece of cast iron, a hole in the base for holding the core in casting being subsequently tapped for the fuse. Shell of this type as shown in Fig. 201 were filled with black powder. The adoption of high explosive for bursting charges required that the strength of the walls of the shell be made as great as possible to insure against accidental explosion due to deformation of the shell while in the bore of the gun. The requirement of the ability to penetrate armor also, led to the use of steel for shell.

The cast-iron shell now used for target practice is fitted with a

Digitized by Google

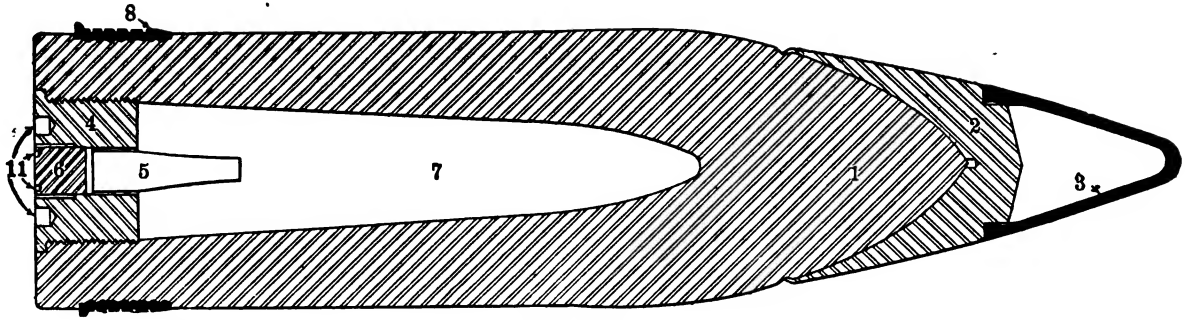

FIG. 199.

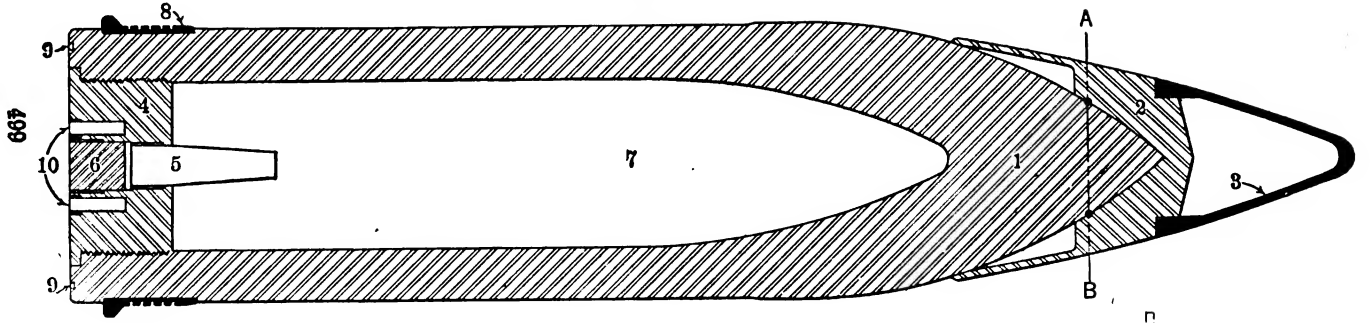

FIG. 200.

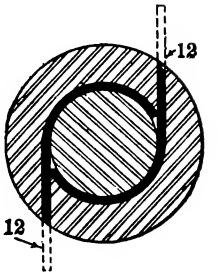

Digitized by Google

base plug similar to that of the steel shell shown in Fig. 200 and is loaded with sand to the regular weight of the filled steel shell.

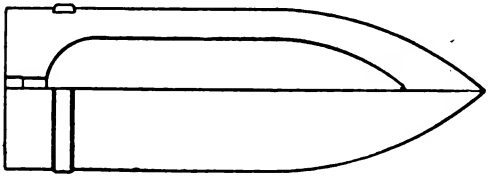

FIG. 201.

Armor-piercing Projectiles.—The construction of armor-piercing projectiles is shown in Figs. 199 and 200, which show a 12-in. A. P. shot and a 12-in. A. P. shell. The two are similar except in size of cavity, thickness of walls and length.

The base is closed by a steel base plug 4, which is screwed in after the bursting charge has been packed in the projectile. The plug is bored and tapped for the fuse 5 and its plug 6, the latter being flush with the rear face of the projectile.

The wrench holes 11 in base plug and head of fuse are filled with lead in order to make a continuous bearing surface for the copper cup, which is applied to the base of the shell to prevent the powder gases in the gun from penetrating to the interior of the shell by way of the screw threads. The edge of the cup is fitted into a circular undercut groove 9, and held in place and sealed by lead wire hammered into the groove.

The head and point of the main body of an armor piercing projectile are extremely hard, the hardness being attained by the use of a suitable special steel and by the proper heat treatment. The armor piercing cap 2, on the other hand, is made of soft steel. The ballistic cap 3, is intended to prolong the head with the 7 caliber radius of ogive nearly to a point and thus reduce the resistance of the air. The ballistic cap is smashed on contact with armor plate and allows the nearly flat forward end of the armor-piercing cap to come in contact with the plate.

The shot has thicker walls and a smaller cavity than the shell and greater capacity for penetrating armor. The weights of shot and shell when filled with explosive are the same.

Two methods of fastening the cap to the projectile are shown.

Digitized by Google

In the case of the shot a number of notches are cut in the projectile near the bourrelet, into which the thin metal of the rear part of the cap is hammered. In the case of the shell an annular groove of semi-circular cross section is ground into the head and a similar groove is cut into the cap. These grooves coincide when the cap is placed in position. Two pieces of wire are then driven into the grooves through tangential holes (12) drilled into the side of the cap, thus securely fastening the cap to the head.

282. Action of the Cap.—The soft-steel cap increases the power of penetration to the projectile in hard-faced armor, at normal

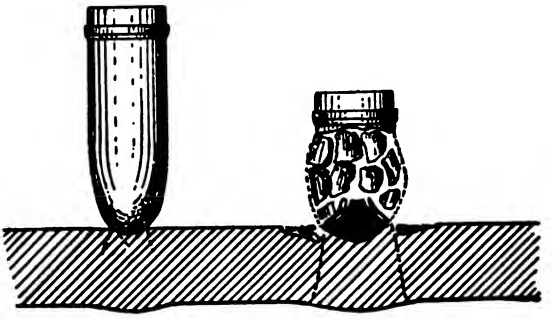

FIG. 202.

impact and up to an angle of 30° from the normal, about 15 per cent with respect to the velocity of the projectile and more than 20 per cent with respect to the thickness of plate.

Among the several theories advanced as to the action of the cap, the following appears the most satisfactory.

When an uncapped projectile strikes the extremely hard face of a modern armor plate, the whole energy of the projectile is applied at the point, and the high resistance of the face of the plate puts upon the very small area at the point of the projectile a stress greater than the metal can resist, however highly tempered it may be. The point is, therefore, broken or crushed and the head of the projectile flattened, Fig. 202. The flattening of the head brings loss of penetrative power, and the energy of the projectile

Digitized by Google

is expended largely in shattering the projectile itself. The head of the projectile adheres to the plate and is practically welded to it.

The effect on a plate of thickness equal to the caliber of the projectile may be the partial or complete punching out of a cylindrical piece, Fig. 203. But even if the plate is completely perforated, the projectile does not get through as a whole; and behind the plate are found only fragments of the projectile and of the metal forced from the plate.

FIG. 203.

When a projectile provided with a cap strikes a hard-faced plate, the pressure due to the resistance of the plate is not confined simply to the point of the projectile, but is distributed uniformly over a comparatively large cross-section. In addition the point of the projectile is firmly supported on all sides by the metal of the cap, and by the force required to accelerate this metal in a direction normal to the axis of the projectile as the cap breaks up. As a consequence the point is not deformed, and passing easily through the cap it finds the hard face of the plate dished and severely strained and more or less

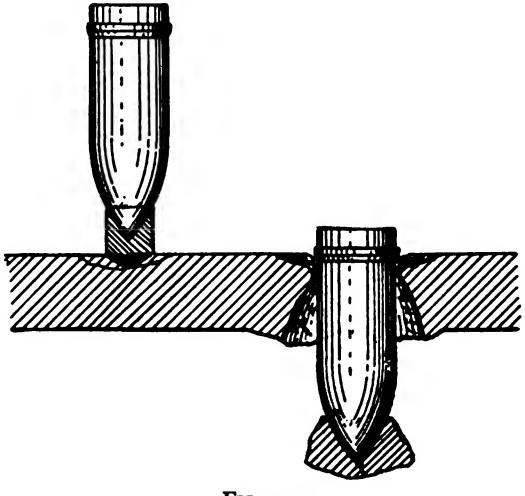

FIG. 204.

Digitized by Google

crumbled by the impact of the cap. The unexpended energy of the projectile forces the point through the weakened face and through the softer metal of the back.

The face of the plate is crumbled, and a conical hole made through the softer metal, through which the projectile passes practically intact and in condition for effective bursting, Fig. 204.

The cap increases *the biting angle* of the projectile, the limiting angle of impact at which the projectile will perforate the plate.

The following results have been obtained in comparative tests of capped and uncapped projectiles against tempered nickel steel plates. The angle of impact is measured from the normal to the plate.

Gun.	Thickness of Plate.	Angle of Impact	Striking Velocity.	Projectile.	Effect.
	Inches	Degrees			
8-inch rifle.....	3.5	60	1074	Capped	Perforated plate
	.....	60	1073	Uncapped	Indented plate ½ inch
	.....	65	1066	Capped	Perforated plate
	.....	65	1077	Uncapped	Indented plate 1⅛ inches
12-inch mortar.....	4.5	40	711	Capped	Nearly perforated. Indentation 6 inches deep. Fragment nearly punched out
	.....	40	711	Uncapped	Glanced from plate. Indentation 1¾ inches deep

283. Projectiles for Field Guns.—The principal projectiles used in field guns and howitzers are the common shrapnel, the high explosive shrapnel and the high explosive shell. The common shrapnel is used with greatest effect against troops in the open, especially when in mass. The high-explosive shell is used against material and against troops protected by earth works or trenches.

The high-explosive shrapnel was designed to serve the purposes of both the common shrapnel and the high-explosive shell.

The Common Shrapnel.—The modern shrapnel is a projectile designed to carry a number of bullets to a distance from the gun and there to discharge them with increased energy over an extended area.

Digitized by Google

In the earlier models the case of the shrapnel was so constructed as to break into a number of fragments on explosion of the bursting charge, with the idea of thus practically increasing the number of bullets carried. With the same end in view the spaces between the balls were filled with the parts of cast metal diaphragms that separated the layers of balls and broke up into additional fragments at the bursting of the projectile. The bursting charge was placed sometimes in the head and somtimes in the base of the projectile. It was found with these shrapnel that a very large percentage of the numerous fragments had not sufficient energy to inflict serious injury. The shrapnel is, therefore, at present constructed of a stout case which, except for the blowing out of the head, remains intact at the explosion of the bursting charge, and from which the balls are expelled in a forward direction and with increased velocity by the bursting charge in the base. By these means, while the number of fragments is less, a greater number possess the required energy and the effective range of these is increased.

Fig. 205 represents the common shrapnel for the 3-in. field gun. The case *c*, is a steel tube drawn in one piece with a solid base. A steel diaphragm, *d*, rests on a shoulder near the base, forming a chamber for the bursting charge in the base of the projectile, and a support for a central steel tube which extends through the head, *h*. A small quantity of guncotton in the bottom of the tube is ignited by the flame from the fuse, and in turn ignites the bursting charge. The balls, of lead hardened with antimony, are 252 in number. Each ball is 49/100 of an in. in diameter and weighs approximately 167 grains, or 42 to the pound. After the balls are inserted a matrix of mono-nitronaphthalene is poured into the case, filling the interstices between the balls in the lower half of the case. When cool this substance is a waxy solid. It gives off a dense black smoke in burning. The purpose of its introduction is to render the burst of the shrapnel visible from the gun so that the gun commander may determine whether his projectiles are attaining the desired range. Resin is used as the matrix in the forward half of the case.

Digitized by Google

The matrix forms a solid mass with the balls and prevents their deformation by the pressure that they would exert upon each other, on the shock of discharge in the gun, if they were loose in the case. Resin gives better support to the balls than naphthalene and, therefore, no more of the naphthalene is used than is necessary to produce the desired amount of smoke.

On being expelled from the case the matrix burns and breaks up, leaving the balls free.

The head, *h*, of steel is given a cellular form to make it as light as possible. The weight of the projectile complete is fixed at 15 lbs., and weight is saved as far as possible in all parts of the case in order that the greatest number of balls may be carried. The head is screwed into the body and fixed by two brass pins, *p*. The combination time and percussion fuse, *f*, is screwed into the head. It is protected against moisture, injury or tampering by the spun brass cap, *b*, soldered on the head of the projectile.

The metal cartridge case is attached to the projectile by being crimped at several points on the grooves shown near the base. These grooves are filled with grease to prevent entrance of moisture to the powder charge in the case.

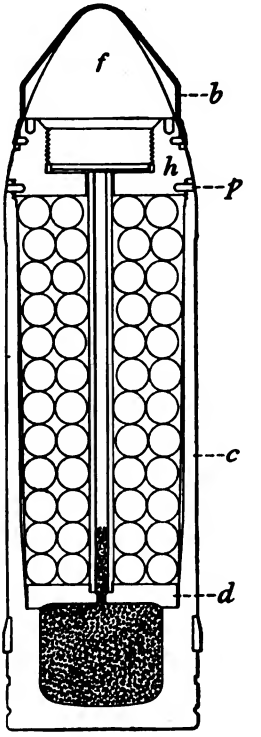

FIG. 205.

284. The Bursting of Shrapnel.—When the shrapnel bursts the balls are expelled forward with increased velocity, and as they have at the same time the movement of rotation of the projectile they are dispersed more or less to the right and left. Their paths form a cone, called the cone of dispersion, about the prolongation of the trajectory. The section of this cone at the ground is an irregular oval with its longer axis in the plane of fire. The dimen-

Digitized by Google

sions of the area will vary, as is evident from Fig. 206, with the angle of fall, the height of burst, and the relation between the velocities of translation and rotation at the moment of burst.

It is assumed that when a shrapnel ball has an energy of 58 ft. lbs. it has sufficient force to disable a man, and with 287 ft. lbs. of energy it will disable a horse. These energies correspond in the service

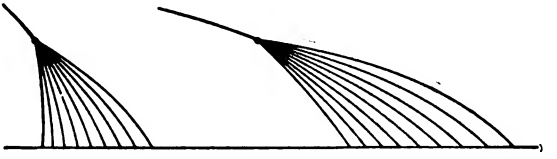

FIG. 206.

shrapnel bullet to velocities of about 400 and 880 ft. secs. An increased velocity of from 250 to 300 ft. is imparted to the balls by the bursting charge. Knowing the velocity of the projectile and the weight of the balls the space within which the balls will be effective may be determined for any range.

Point of Burst.—The best point of burst for a shrapnel is assumed to be that point from which the burst of the shrapnel will produce practically one hit per square yard of vertical surface at the target. It is determined from the cone of dispersion by finding the right section that contains as many square yards as there are bullets in the shrapnel. The distance in front of the target at which the burst occurs is called the *interval of burst.* On account of the variation at different ranges in the velocities of translation and of rotation the interval of burst which will produce one hit per square yard of vertical surface at the target varies with the range, decreasing as the range increases.

Practically it is found best to consider the height of burst rather than the interval of burst, since the battery commander can more readily estimate the height than the interval. Suitable cross hairs in the field of the battery commander's telescope facilitate this estimation.

In our service a height of 3/1000 of the range, called 3 *mils*, is

Digitized by Google

adopted as the most favorable mean height of burst. The point of burst at this height gives, over a large part of the range, very approximately the correct interval of burst. For short ranges this height of burst is excessive, and for long ranges it is insufficient.

The following table shows for the 3-in. shrapnel the results obtained at different ranges from bursts at the correct interval of burst, and also at a height of burst of 3 mils. The front of target that should be covered depends upon the number of balls in the shrapnel. For the 3-in. shrapnel with 270 bullets, a former model, the front to be covered with one hit per square yard is 18.5 yards.

Range.	One Hit per Square Yard.		Height of Burst, 3 Mils.	
	Interval.	Front Covered.	Interval.	Front Covered.
Yards.	Yards.	Yards.	Yards.	Yards.
1000	81.4	18.5	118.2	27.0
2000	73.0	18.5	83.4	21.2
2500	68.98	18.5	73.5	19.55
3000	65.84	18.5	66.6	18.76
3500	63.28	18.5	60.9	18.84
4000	61.07	18.5	56.4	17.12
4500	58.97	18.5	51.3	16.13

It will be observed that between 2000 and 4500 yds. the height of burst of 3 mils gives approximately the desired density of fire at the target. At ranges less than 2000 yds. the front covered is largely increased and the density of fire, therefore, diminished.

The figures refer to a single shrapnel bursting at the mean point of burst. In a group of shrapnel the bursts above and below the mean point would largely make up the discrepancies in distribution and density.

Fuse.—The fuse used in the shrapnel is the combination time and percussion fuse of which a full description will be found in the chapter on fuses. The fuse is arranged in such a manner that if the projectile is not burst in flight it will be burst soon after impact, a short time being allowed by the delay element in the fuse, during

Digitized by Google

which the projectile may rise on a graze and its burst be accomplished in the air.

The fuse is also constructed to permit of using the shrapnel as canister. When the fuse is set at zero of the time scale, the projectile will burst within 25 feet of the muzzle of the gun.

285. The High Explosive Shrapnel.—The high explosive shrapnel is similar to the common shrapnel except that its head is larger and contains a cavity for a high explosive such as explosive D. The space between the balls is also filled with a high explosive instead of the resin and mono-nitronaphthalene mentioned in the text. A small amount of resin may be placed over the diaphragm *d*, Fig. 205, to seal the chamber for the black powder bursting charge. The projectile is provided with a combination time and percussion fuse of the ordinary type the time train being connected only to the black powder bursting charge in the base of the shrapnel while the flame from the percussion element of the fuse leads to a detonator that detonates the high explosive in the head and between the balls. When this projectile is used as a shrapnel only the time train of the fuse is ignited when the gun is discharged and after the required length of time and while the projectile is in the air it ignites the black powder bursting charge which blows out the head and expels the balls in a forward direction. The detonator not having been ignited the high explosive around the balls will not be detonated and will simply burn harmlessly, producing a black smoke similar to that produced by the burning of mono-nitronaphthalene. When the head strikes the ground its high-explosive charge is ignited by the percussion elements of the fuse, producing a secondary explosion on the ground.

When it is desired to get the effect of a high-explosive shell with this shrapnel the time train of the fuse is set at " safe " so that the projectile will burst only on impact. When the point of the projectile strikes the ground or any other object the percussion element of the fuse will function, igniting the detonator which detonates the high explosive in the head of the shrapnel and between the balls.

Digitized by Google

It was thought at one time that the high-explosive shrapnel would supersede both the common shrapnel and the shell, but present indications are that both the latter will continue to be used. Apparently the high-explosive shrapnel is not as good either as a shrapnel or as a shell as the projectiles designed for those special purposes.

The High-explosive Shell.—The high-explosive shell for the 3-in. field gun is shown in partial section in Fig. 207. It is a comparatively thin-walled shell with a large cavity. Safety in the gun against entrance of the powder gases into the cavity, is secured by the base cover 3, which covers the end of the detonating fuse 2. The base cover is sealed by driving a lead wire into the groove 4.

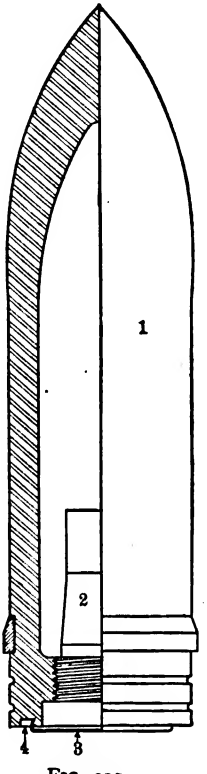

FIG. 207.

Point fused high-explosive shell are also used in field guns.

High-explosive shell for larger caliber field guns and howitzers are similar to that shown.

286. Shell Tracers.—These are devices for illuminating the path of the projectile, or for marking it by the emission of smoke, depending upon whether the firing is conducted at night or in day-light. Their purpose is to enable the battery commander to determine whether the fire is properly directed. They are especially useful against air craft.

One form of Semple night tracer is shown in Fig. 208. The body 1 of brass is threaded at the end for screwing into the base of the projectile. The interior of the body is also threaded for holding more securely the illuminating composition which fills it to within a half inch of the top. On top of the illuminating composition are the cup 2, holding the priming composition, and the firing pin 4, assembled; also the lead disk 3, which seals the parts beneath it.

The end of the body is closed by the brass disk 5, and the firing

Digitized by Google

pin is secured by the nut 6. An open space 7 is left between the brass and lead disks. A vent 8 leads through the brass disk to the open space.

The action of the tracer is as follows: While the projectile is in the gun the powder gas enters the vent 8, and fills the open space 7, under pressure. When the projectile leaves the gun, relieving the outside pressure the gas in the space 7 blows out the brass disk, thus

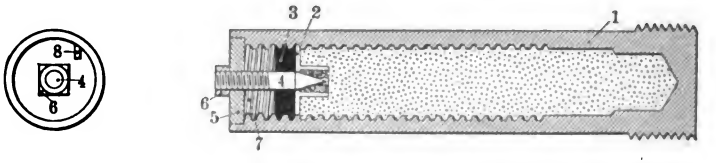

FIG. 208.

drawing the roughened end of the firing pin through the priming composition and firing it. The ignited illuminating composition gives a very bright light at the end of the projectile.

For day tracing a special shell is prepared. The cavity of the shell is partly filled with a mixture of lampblack and water, the mixture having the consistency of thick paint. A small orifice is made through the base of the projectile on one side. The powder gases enter this orifice under the pressure in the gun, and filling the cavity in the shell force from the orifice during flight a spray of black liquid.

The chief difficulty in developing a successful day tracer is in securing a sufficient volume of smoke to make the trace of the projectile visible throughout the trajectory.

287. Grenades.—Grenades are small metal bombs filled with high explosive and designed to be thrown by the hand or fired from the rifle. Hand grenades are of two general types, those exploded by a time fuse lighted just before throwing or in flight and those exploded by a percussion fuse on impact. The latter are usually provided with a wooden handle or a rope sling to keep them head on in flight and to permit them to be thrown more conveniently and to a greater distance.

Digitized by Google

Various safety features to prevent premature explosion are included in the designs. Hand grenades usually weigh about 1 lb. The metal shells of grenades are usually fluted to insure their breaking up into pieces of suitable size.

Rifle Grenades.—The Babbitt rifle grenade, invented by Col. E. B. Babbitt, Ord. Dept., U. S. A., is similar to the hand grenades described above except that instead of being provided with a tail by which it may be grasped preparatory to throwing it and which serves to hold the point of the hand grenade to the front in flight, it is provided with a long stem projecting from the rear. This stem is intended to be inserted to varying depths in the muzzle of the Springfield rifle. Grooves on the stem of the rifle grenade correspond to different depths of insertion in the muzzle of the rifle and a small split ring on the stem may be shoved along it until it slips into one or the other of these grooves. The contraction in diameter of the split ring when it enters a groove serves to hold it in the groove until pressed out by considerable force. The stem of the grenade is inserted in the muzzle of the rifle until further insertion is prevented by the ring in a groove coming against the end of the muzzle. A blank cartridge for the rifle is furnished for use in connection with the rifle grenade. The charge is constant but the varying depth of insertion of the stem of the grenade varies the capacity of what may be called the powder chamber when the grenade is used. The smaller the depth of insertion of the stem the greater will be the capacity of the powder chamber and the lower the pressure of the powder gases. At the same time a smaller insertion of the stem of the grenade allows a shorter time for the powder gases to act on it before it leaves the muzzle. The rifle grenade is intended to be fired from behind a shelter of some kind with the rifle inclined at an elevation of approximately 45°. With this elevation and with the smallest stem insertion the range is about 25 yds. With 45° elevation and the maximum stem insertion the range is about 220 yds. The range of the hand grenade is from 0 to 40 yds. and the soldier must expose himself while throwing it, which is not the case when the rifle grenade is used.

Digitized by Google

The rifle grenade is equipped with a percussion fuse which is armed, or prepared for firing by the discharge of the rifle and which explodes the grenade on impact.

Hand and rifle grenades are used for the protection of wire entanglements and, under certain conditions, for the attack of entrenched positions.

Dummy Grenades.—These are issued for practice in throwing or firing grenades. The weight of the dummy is the same as that of the live greande but the explosive charge is left out.

Bombs.—Bombs are of two types, those to be fired from trench mortars or thrown from other types of bomb throwers, and those to be dropped from aircraft. Both types may be considered as en-

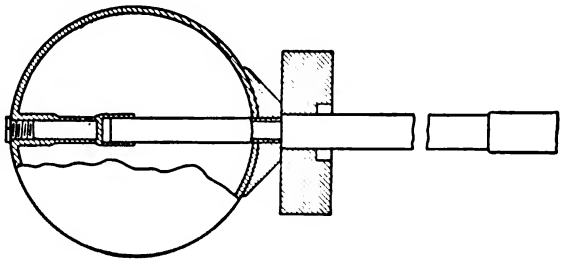

FIG. 209.

larged grenades. Bombs carry high-explosive charges and are ordinarily exploded by percussion fuses on impact.

One of a larger type of bomb for a trench mortar is shown in Fig. 209. The stem enters the bore of the mortar and carries the propelling charge. In the type shown it drops from the bomb in flight. In other types it remains with the bomb and assists in keeping it head on.

Bombs to be dropped from aircraft are elongated in shape. The distribution of weight is such as to keep them point down in their descent. Fins are sometimes provided at the rear end for the same purpose.

Incendiary Projectiles.—These are projectiles which carry, in addition to the explosive charge, a slow-burning composition which develops great heat. While the temperature of explosion of the

Digitized by Google

high-explosive charge is very high at the moment of explosion, the hot gases are soon dissipated and are not effective in setting fire to objects in the vicinity of the point of explosion. The incendiary charge, on the other hand, burns for a considerable time and sets fire to any combustible material in the vicinity of the explosion.

Gas Bombs.—These are projectiles or bombs which carry charges of compressed gas of more or less poisonous nature, in addition to small explosive charges. Gas heavier than air is used, so that when released on explosion, it settles to the ground and enters trenches or other protected points.

288. Volumes of Ogival Projectiles.—Assume a solid cylinder, Fig. 210, of the length and diameter of a given solid shot.

Let d represent the diameter of the shot, usually taken as equal to the caliber of the gun,

L, the length of the shot in calibers.

The volume of the cylinder is $(\pi d^2/4)Ld$.

Let B represent, *in calibers*, the length of a cylinder whose diameter is d and whose volume, $(\pi d^2/4)Bd$, is equal to that part of the cylinder in Fig. 210 that is outside the shot.

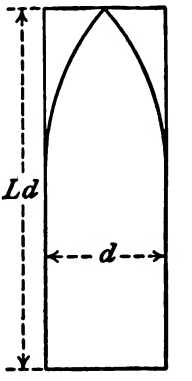

FIG. 210.

Subtracting this volume from the volume of the whole cylinder and representing by V_s the volume of the solid shot, we have

$$V_s = \frac{\pi d^2}{4}(L-B)d = \frac{\pi d^3}{4}(L-B),$$

$(L-B)d$, or $L-B$ calibers, is the length of a solid cylinder whose diameter is the diameter of the shot and whose volume is equal to the volume of the shot. $L-B$ is called the *reduced length* of the projectile in calibers, as it is the length of a cylinder of equal diameter and volume.

B is a function of the radius of the ogive expressed in calibers. Its value, obtained by means of the calculus, is given by the equation

$$B = 2n^2(2n-1)\sin^{-1}\frac{\sqrt{4n-1}}{2n} - \frac{6n^2-2n-1}{3}\sqrt{4n-1},$$

Digitized by Google

in which n is the radius of the ogive in calibers. When $n=2$, the usual radius of head in seacoast projectiles without the cap, $B=0.58919$.

For cored shot the reduced length is less than for solid shot by the length of the cylinder whose volume is that of the interior cavity. Representing by B' the length of this cylinder in calibers, the solid volume of the cored shot, or volume of the metal, is given by the equation

$$V_c=\frac{\pi d^3}{4}\{L-(B+B')\}.$$

Weights of Projectiles.—Representing the reduced length by l, and dividing the expression for the volume of one projectile by a similar expression for another, we have

$$\frac{V_s}{V_s'}=\frac{d^3l}{d'^3l'}.$$

Since the weights are proportional to the volumes:

The weights of ogival projectiles are proportional to the products of the cubes of their diameters by their reduced lengths.

The weights of ogival projectiles of the same caliber are proportionate to their reduced lengths.

As the standard projectiles for most of our guns are similar, their dimensions when expressed in terms of the caliber are the same. The reduced length is therefore the same for all these projectiles, and the weights of the projectiles are proportional to the cubes of the calibers.

289. Thickness of Walls.—The maximum stress sustained in the gun by the walls of a cored projectile, at any section of the projectile, is due to the pressure to which the walls are subjected in transmitting to that part of the projectile in front of the section the maximum acceleration attained in the gun. The maximum acceleration is due to the maximum pressure in the gun; and this pressure being known the acceleration is determined by dividing the pressure by the mass of the projectile.

$$\alpha=\frac{P}{M}=\frac{Pg}{w},$$

Digitized by Google

α being the acceleration, P the total maximum pressure on the base of the projectile, and w the weight of the projectile. Substituting the values of the known quantities α may be determined.

α being known, if we substitute for w the weight of that part of the projectile in front of the given section and solve the equation for P, the value obtained, which we will call P_1, will be the pressure sustained by the walls of the section. The area of the section is $\pi(R^2-r^2)$. The pressure per unit of area is therefore P_1 divided by $\pi(R^2-r^2)$.

This pressure must not exceed the elastic limit of the metal for compression, divided by a suitable factor of safety; nor must it cause excessive flexure in the walls. If it does the walls must be made thicker.

Thickening the walls will increase the weight in front of the section and therefore a new value of w must be obtained for a second determination.

In shrapnel it is desirable to make the walls as thin as possible in order to increase the number of bullets that may be carried. The longitudinal pressure of the contained bullets is borne by the thicker base of the projectile, and the walls sustain only the pressure due to the centrifugal force and that proceeding from the weight of the head and fuse. Their thickness will therefore be determined by the requirement that they must resist rupture by the pressure exerted by the gases from the bursting charge when the head of the projectile is blown off. The pressure required to blow off the head is equal to the resistance offered to shearing by the screw threads and shear pins of the head.

A much greater thickness of wall than is needed in the gun is required to enable a projectile to withstand the shock of impact on the face of an armor plate. The retardation in this case is much greater than the acceleration in the gun and consequently the stresses on the walls are correspondingly greater. As there is no means of determining the retardation at impact, the proper thickness of walls of armor piercing projectiles cannot be calculated, but must be determined by experiment.

Digitized by Google

We may, however, by assuming that the plate offers a constant resistance to the penetration of the projectile, determine the thickness of wall necessary in the projectile to enable it to pass through the plate and have any required velocity on emerging.

Thus, to determine the thickness of wall of an armor-piercing shell that is required, with a striking velocity v, to perforate an armor plate of given thickness and to have on emerging a remaining velocity v_1.

Let S be the constant resistance offered by the plate;

l the thickness of the plate, in feet;

α the constant retardation of the projectile during penetration.

The work performed by the resistance over the path l is equal to the energy abstracted from the projectile while traversing this path. Therefore

$$Sl=\frac{M}{2}(v^2-v_1^2) \qquad S=\frac{M}{2l}(v^2-v_1^2).$$

The retardation due to the resistance is equal to the resistance divided by the mass. Therefore

$$\alpha=\frac{S}{M}=\frac{v^2-v_1^2}{2l}.$$

The pressure sustained by any section of the projectile during penetration is equal to the mass of that portion of the projectile behind the section multiplied by the retardation. Denoting by w' the weight of that part of the projectile behind any given section, we have for the pressure sustained per unit of area at the section

$$p=\frac{w'}{g}\,\frac{\alpha}{\pi(R^2-r^2)}=\frac{w'(v^2-v_1^2)}{2lg\pi(R^2-r^2)}.$$

R and r must be given such values, that is, the thickness of the walls must be such that p will not exceed the elastic lmit of the metal for compression, or that the flexure of the walls, considering the shell as a hollow column, will not be sufficient to cause rupture.

Digitized by Google

290. **Sectional Density of Projectiles.**—It has been found by experiment, as explained in exterior ballistics, that the *retardation* in the velocity of a fired projectile, due to the resistance of the air, is expressed by an equation that, for any fixed atmospheric conditions and standard form of projectile, may be put in the form

$$R = A\frac{d^2}{w}f(v),$$

R representing the *retardation*, A a constant, d the diameter of the projectile, w its weight, and $f(v)$ some function of its velocity. For a given velocity it is apparent that the retardation will increase directly with the square of the diameter of the projectile and inversely with its weight; or, more concisely, the retardation will increase directly with the fraction d^2/w.

The reciprocal of this fraction, or w/d^2, will therefore be the measure of the capacity of the projectile to resist retardation, that is, to overcome the resistance of the air.

The fraction w/d^2 is called the *sectional density* of the projectile. $w/\frac{1}{4}\pi d^2$ is the weight of the projectile per unit area of cross-section, and w/d^2 is taken as the measure of this weight, $\pi/4$ being constant.

The sectional density is of importance in considering the motion of the projectile both in the air and in the gun.

Effect on the Trajectory.—The greater the sectional density of the projectile, the less the value of its reciprocal, the factor d^2/w in the above equation, and consequently the less is the value of the retardation of the projectile.

Of two projectiles fired with the same initial velocity and elevation, the projectile with the greater sectional density will therefore lose its velocity more slowly and will attain a greater range. For any given range it will be subjected for a less time to the action of gravity and other deviating causes, and will therefore have a flatter trajectory and greater accuracy.

The advantages of increased sectional density are therefore increased range, greater accuracy, and a flatter trajectory.

The sectional density may be increased by increasing the weight

Digitized by Google

of the projectile while keeping its diameter the same or by decreasing the diameter keeping the weight the same For projectiles of the same form increasing the caliber increases the sectional density, since in this case w increases as d^3.

The weight of a projectile for any gun may be increased by increasing its length. This has been done with modern projectiles for large guns until the length is from $3\frac{1}{2}$ to 4 calibers. In small arms the weight is increased by the use of lead in the bullet. Increase in sectional density by decrease in diameter is found in the modern small arms of reduced caliber, the weight and diameter of the projectile having been reduced in such proportions as to increase its sectional density. The weight has been reduced in smaller proportion than the square of the caliber and to accomplish this the length of the bullet had to be relatively increased.

Effect on the Gun.—An increased weight of projectile will result in an increased maximum pressure in the gun if the same muzzle velocity is to be maintained with the same powder, size of powder chamber and length of travel. The maximum pressure for any gun being fixed, the use of a heavier projectile will usually require the use of a slower powder, and if the increase in weight is very great it will require an increase in the size of powder chamber, or in the length of the gun, or in both dimensions.

Manufacture of Projectiles

291. Cast-iron Projectiles.—A wooden pattern of the shape of the projectile is first made, the dimensions of the pattern being slightly greater than the dimensions desired in the projectile, in order to allow for contraction of the metal in cooling. The pattern is in one or more parts, depending upon its size. The pattern shown in Fig. 211 is in two parts separated at the line b. The parts are slightly coned from this line to facilitate withdrawal from the mold. For hollow projectiles a core box is also made similar in its interior dimensions to the cavity in the shell. The core, e, Fig. 211, made of core sand mixed with adhesives, is formed in the core box around a hollow metal spindle wound with tow. The

Digitized by Google

heat of the casting burns the tow, and the gases from the core pass out through the hollow spindle.

Fig. 212 shows a mold prepared for casting a shell. The outer box, called the flask, is in two sections parting at the line *xy*. In the lower part the sand is molded around the pattern, which is also divided into two parts on the same line In the upper part of the flask the remainder of the mold is made and the core attached

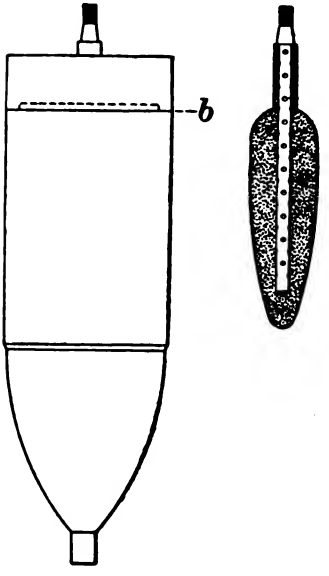

FIG. 211.

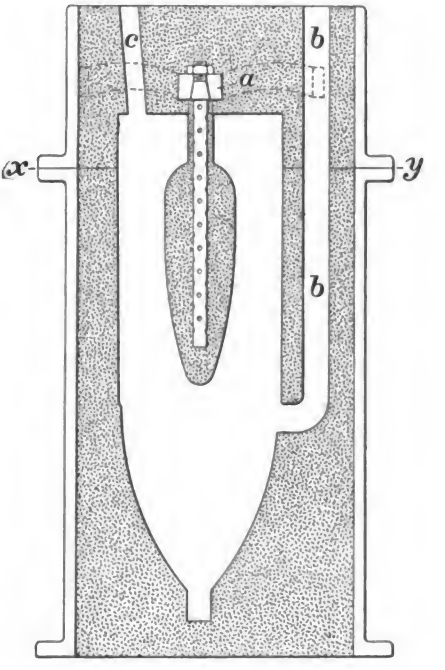

FIG. 212.

in its proper position by means of the frame *a* bolted to the flask. The gate *b* and the riser *c* are also formed in the mold, the riser being considerably greater in diameter than shown in the figure. The patterns are withdrawn and the parts of the mold brought together and bolted.

The molten metal enters through the gate *b*, generally in a

Digitized by Google

tangential direction, so that the metal in the mold has a circular motion which assists in the escape of the gases and brings the impurities to the center and top. The mold is filled with the metal to the top of the riser, where the impurities collect. The pressure of the liquid metal in the riser assists in making the casting sound, and affords a means of adding molten metal as the casting shrinks in cooling.

Cast-steel Projectiles.—Cast-steel projectiles are made in molds similar to that shown in Fig. 212 except longer and with the top open to provide for a metal sinking head. Cast-steel projectiles thus made are sometimes given some forging for the purpose of improving the quality of the metal.

When intended for armor piercing, cast-steel projectiles are made from metal of the proper composition and are given the proper heat treatment to make them tough and extremely hard, especially at the point. Cast-steel armor-piercing projectiles are successfully made at Watertown Arsenal.

Forged Projectiles.—The larger calibers of forged projectiles are made from ingots or billets and the smaller calibers from rolled bars. The heads are formed by means of a steam hammer or a hydraulic press. The cavity is bored out or punched in a hydraulic press. After partial machining the projectiles are given the necessary heat treatment. Armor-piercing projectiles are given special treatment which renders the head extremely hard and the entire body of the projectile tough.

292. Requirements in Manufacture.—The material for cast-iron projectiles must have a tensile strength of at least 28,000 lbs. per sq.in. Common steel shell must be made of steel of a uniform composition and must be subjected to uniform heat treatment for each lot. The same applies to armor-piercing projectiles. In addition the hardness of the latter, as determined by the scleroscope, must comply with a certain standard.

The base plugs of all projectiles must have an elastic limit between 50,000 and 60,000 lbs. per sq.in. and a tensile strength of between 85,000 and 100,000 lbs. per sq.in.

Digitized by Google

The material for shrapnel cases for the 3-in. field gun must have an elastic limit of 90,000 lbs. per sq.in. and a tensile strength of 120,000 lbs. per sq.in.

Inspection of Projectiles. Measurements.—The dimensions of the projectiles are tested by means of calipers, and profile and ring gauges. The slight variations, called *tolerances*, allowed from the

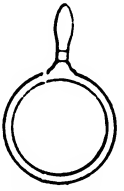

FIG. 213.

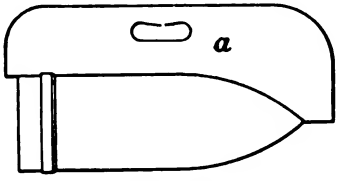

FIG. 214.

standard dimensions are specified for each dimension, and the gauges for any projectile are constructed for the maximum and minimum of the particular dimension. Thus, for the diameter of the band there are two ring gauges, one a maximum, the other a minimum, and similarly for other diameters. Maximum and minimum plug gauges are applied to the threads of the fuse hole. A ring gauge is shown in Fig. 213. A profile gauge or templet is shown at *a* in Fig. 214.

Eccentricity.—Eccentricity in the cavity of the projectile is determined by rolling the projectile along two rails, *a*, Fig. 215, placed on a flat surface. Irregular movement of the projectile denotes eccentricity, which may be measured by means of the calipers, *d*, shown in the figure.

Pressure Test.—For the determination of cracks, holes, etc., all A. P. projectiles 5 ins. or more in caliber are subjected to an interior hydraulic pressure of 2000 lbs. per sq.in. For torpedo shell the pressure is 8000 lbs. per sq.in.

Seacoast or mobile artillery projectiles of less than 5 ins. caliber are subjected to an exterior pressure on the base or over the entire surface as specified, of 20,000 lbs. per sq.in. or as nearly that as the strength of the projectiles will permit. Cases for high explosive

Digitized by Google

shrapnel are, in addition, subjected to an interior pressure of 1000 lbs. per sq.in.

Test for the Detection of Initial Strains.—All A. P. shot and A. P. shell 6 ins. and upward in caliber are subjected to the following test for the detection of initial strains:

After being cooled in a water bath to 60° F. the projectile under test is immediately transferred to a boiling water bath and held until it reaches a temperature of 212° F. It is then transferred to

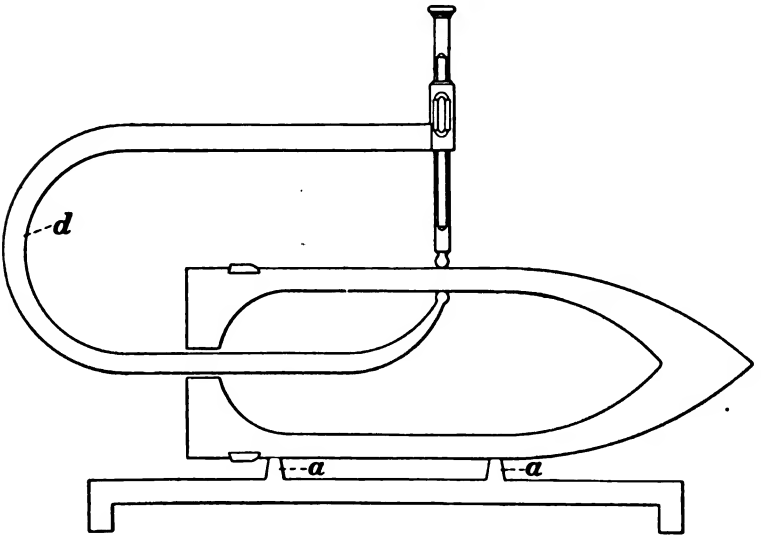

FIG. 215.

the cold bath and held until cooled to 60° F. The projectile is immersed in these baths point down and to within an inch of the top.

At the completion of the test each projectile is rung with a hammer to determine whether cracks have developed.

293. **Ballistic Test.**—The ballistic test is the final test which determines the acceptance or rejection of a lot of projectiles. By a lot is meant a number varying from 3000 for the 1 pdr., to 250 for the 16-in., of which the manufacture was carried on at the same

Digitized by Google

time and by the same methods. Three or more projectiles are selected from the lot and sand loaded to the required weight. They are then subjected to a firing test in the gun for which intended, the nature of the test depending upon the kind of projectile.

Armor-piercing Shot.—These are fired against the best Krupp armor plate from .75 to 1.25 calibers thick, secured to timber backing. Against plates 1 caliber thick, the striking velocities of the shot from the 12-, 14- and 16-in. guns are from 1740 to 1765 ft. per sec. corresponding to ranges of 8000, 10,500 and 14,000 yds., respectively, in these guns.

The shot is required to perforate the plate unbroken and then be in condition for effective bursting. To test this it is subjected, after recovery, to an interior hydraulic pressure of 50 lbs. per sq.in. and must show no leakage.

The lot is accepted if the first two projectiles fired pass the above test.

Armor-piercing Shell.—These are similarly tested against plates one-half caliber thick except that for projectiles less than 8 ins. the thickness of the plate is 3.5 ins. The striking velocity for 12-, 14- and 16-in. shell is from 1240 to 1255 ft. per sec.

Deck-piercing shell for the 12-in. mortar are tested against a 3-in. plate specially treated. The striking velocities are 950 ft. per sec. for the 700-lb. projectile, 810 ft. per sec. for the 824-lb. projectile and 660 ft. per sec. for the 1046-lb. projectile.

Twelve-in. torpedo shell are fired into a sand butt from a gun in which the chamber pressure must be 40,000 lbs. per sq.in.

Common steel shell for seacoast guns of small caliber are tested with service velocities against tempered steel plates from 3 to $4\frac{1}{2}$ ins. thick, depending on the caliber and service velocity of the projectile.

294. Common Steel Shell for Mobile Artillery.—The ballistic test for common steel shell for mobile artillery consists in firing three shells from each lot into a sand butt using a pressure in the gun 12% greater than the service maximum pressure. None of the

Digitized by Google

shell should show evidence of having been deformed either in the gun or by impact with the sand butt.

Common Shrapnel.—The preceding test is also applied to shrapnel, the base charge first having been removed and the fuses replaced with dummies. Impact with the sand butt will usually break up the shrapnel cases, but the recovered fragments should show no deep marks of the rifling of the gun. The cases should not break up before reaching the butt.

In addition to the preceding test two shrapnel, suspended horizontally, are fitted with means for electrically firing the base charge. The velocities of the bullets and of the case are measured with the usual instruments and should come within prescribed limits.

Finally two shrapnel, completely assembled with a sensitive point fuse, are fired, with a 12% excess pressure, through a bursting screen placed 50 ft. in front of the gun at a pattern screen placed 100 ft. in front of the gun.

The pattern made by the balls on the latter must be uniform and the cone of dispersion must be within prescribed limits. The shrapnel case must not be broken by the explosion of the base charge.

High-explosive Shrapnel.—The ballistic test of high-explosive shrapnel is similar to that of common shrapnel, but rather more severe. In addition this shrapnel must explode with certainty on impact when used as a shell and must show satisfactory fragmentation when thus used.

Painting.—The interior cavities of all shot and shell are thoroughly painted with a black non-acid paint. The interiors of shrapnel cases are painted with a thick coat of asphaltum varnish.

The exteriors of seacoast projectiles are painted black except as follows:

A band of blue gray for separate loading projectiles, and of the distinctive color of the explosive charge for fixed ammunition projectiles, extends around the center of gravity.

The points of steel shot are painted blue gray to the bourrelet, and those of steel shell are so painted half way to the bourrelet.

Digitized by Google

The kind of explosive used in projectiles for separate loading guns is indicated by the color of the bases, yellow indicating high explosive and red, black powder, or other low explosive.

In projectiles for fixed ammunition the nature of the explosive is indicated by the color of the band around the center of gravity. The significance of the colors indicating the nature of the explosive for mobile artillery projectiles is the reverse of that for seacoast projectiles.

Armor

295. History.—The use of armor for the protection of ships of war began in France in 1855 and soon became general. The first armor was of wrought iron. This metal opposed a sufficient resistance to the round cast-iron projectiles of that time and to the elongated cast-iron shot of a later date. As the power of guns increased and chilled projectiles came into use wrought-iron armor became ineffective. It was replaced about 1880 by compound armor which consisted of a wrought-iron back and a hard-steel face. Compound armor was made either by running molten steel on the previously prepared wrought-iron back or by welding a plate of steel to another of wrought iron by running molten steel between them, both plates being previously brought to a welding heat. The hard steel face opposed a great resistance to penetration of the shot and caused the shot to expend its energy in shattering itself. At the same time it distributed the stress over an increased section of the iron back, and the toughness of the wrought iron served to hold the plate together. The chief defect of the compound plate was due to the difficulty of obtaining intimate union between the two metals, and lay in the tendency of the steel face to flake off over considerable areas. The basic principle of this armor, the hard face and the tough back, is still maintained in the construction of the most modern armor.

At the same time that the compound plate was used by Great Britain and other powers the all-steel plate was being used by France, the effectiveness of the two plates being about equal.

Digitized by Google

In 1889 the homogeneous nickel-steel plate, markedly superior to the steel plate in toughness and resisting power, was introduced. The Harvey treatment of the nickel-steel plate, developed in the United States in 1890, still further increased the resisting power of armor, and in 1895 the Krupp process followed with further improvement.

Harvey and Krupp Armor.—The principle employed in the manufacture of armor by these two processes is the same. In both, the face of the plate is made extremely hard by supercarbonization and subsequent chilling. The superiority of the Krupp plate appears to be due to the composition of the steel. The Harvey plate is made of a manganese nickel steel, while in the Krupp plate chromium is also present, and in greater quantity than the manganese. The composition of the two plates, in percentages, is given as follows:

	C	Mn	Si	P	S	Ni	Cr
Harvey	0.30	0.80	0.10	0.04	0.02	3.25	0.00
Krupp	0.35	0.30	0.10	0.04	0.02	3.50	1.90

The nickel, and to a certain extent the manganese, give great strength and toughness to the metal, while the chromium makes the metal more susceptible to the treatment that gives the desired qualities to the finished plate. First, it permits the attainment of a very tough fibrous condition throughout the body of the plate that makes it less liable to crack; second, it gives the metal an affinity for carbon which enables supercarbonization to a greater depth; third, it increases the susceptibility of the metal to tempering, which gives a greater depth of chill. These are the qualities that mark the superiority of Krupp armor.

Even when carbonization of the plates is effected in the same manner, carbon will be absorbed to a greater depth in the Krupp than in the Harvey armor, giving a greater depth of hardened face and an increased resistance to penetration of about 20%.

296. Manufacture of Armor.—The steel, of proper composition, is made in the open-hearth furnace and cast into an ingot of the shape shown in Fig. 216. The head of the ingot affords a means for the attachment of the chains of the cranes employed in handling

Digitized by Google

it. A long, heavy beam is used to counterbalance the weight of the plate when slung in the chains.

When stripped from the mold and cleaned, the ingot is heated in a furnace and then forged, as shown in Fig. 217, under an immense

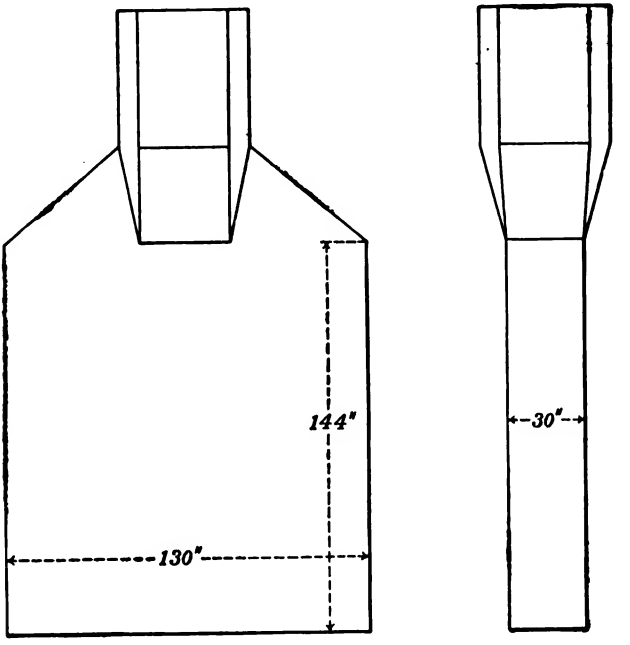

FIG. 216.

hydraulic press capable of exerting a total pressure of about 15,000 tons. The forging reduces the thickness of the plate and increases its length and breadth. The plate is then rough machined approximately to finished dimensions.

Carbonizing.—The carbonization of the face of the plate is effected by one of two methods: The cementation process, or the gas carbonizing process. The cementation process consists in covering the surface of the plate with carbonaceous material, usually a mixture of wood and animal charcoal, heating the plate to a temperature of about 1950°, and maintaining it at this tem-

Digitized by Google

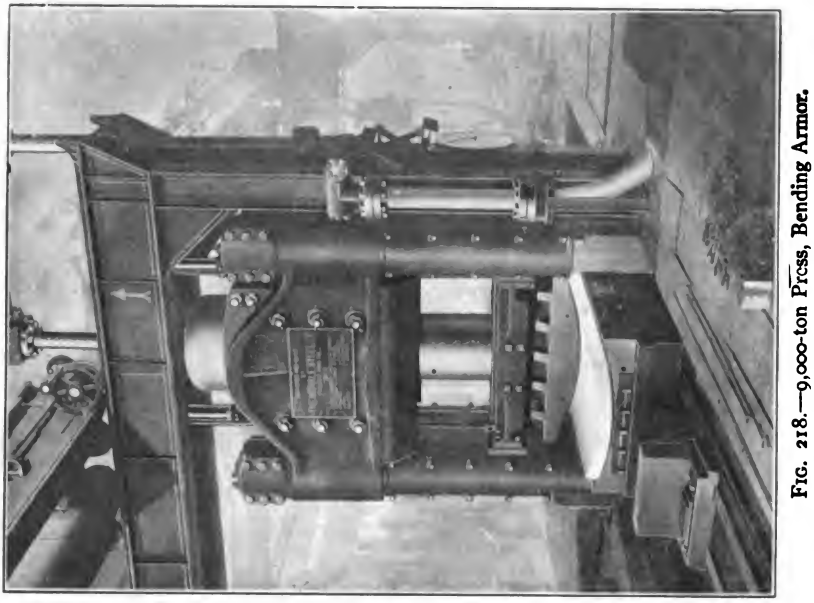

FIG. 218.—9,000-ton Press, Bending Armor.

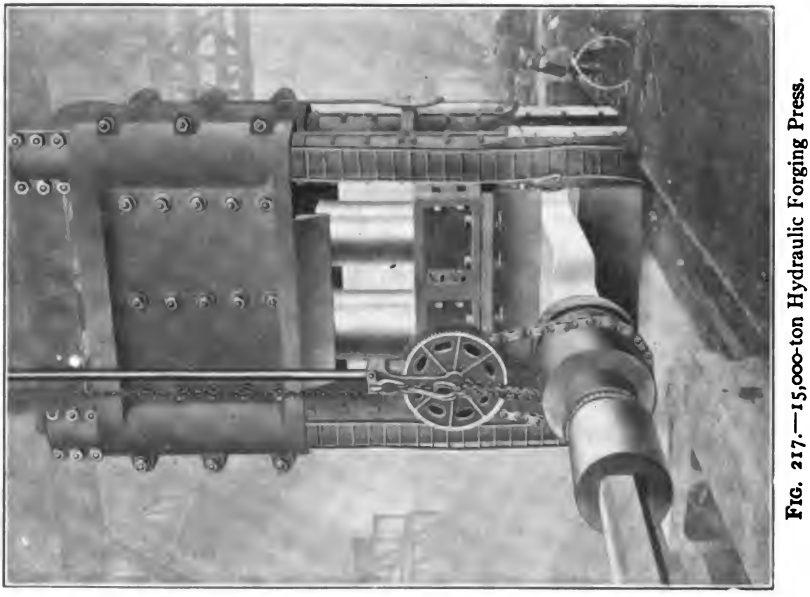

FIG. 217.—15,000-ton Hydraulic Forging Press.

Digitized by Google

perature for a sufficient time to accomplish the required degree of carbonization. A covering of sand protects the face of the plate and the carbonizing material from the flames of the furnace, and excludes the air. From four to ten days, depending on the thickness of the plate, are required to bring the plate to the desired temperature, and a further period of from four to ten days to effect the carbonization of the face. Under the action of the heat the carbon is absorbed into the face of the plate, and penetrates into the interior, the quantity of the absorbed carbon diminishing from the surface inward.

The gas carbonizing process consists in passing coal gas along the face of the plate heated in a furnace to about 2000°. The heat decomposes the gas, which deposits carbon on the face of the plate, and the carbon is absorbed as in the cementation process.

Reforging and Bending.—After being cleaned of the scale that is formed on it in the process of carbonization the plate is reforged to its final thickness. It is then annealed and bent to the desired shape in a hydraulic press. The operation of bending an armor plate in a 9000-ton press is shown in Fig. 218.

Hardening.—For hardening, the plate is uniformly heated to a high temperature and quickly cooled or chilled by cold water sprayed upon it under pressure.

In Krupp plates as first made the hardening produced cracks over the whole hard surface of the plate, some of them a quarter of an inch wide and extending some distance into the plate. The cracks were characteristic of the plate and were not considered abnormal, the resistance of the plate even with the cracks being greater than that of plates made by other processes. With improvement in the process of manufacture smoother plates were produced and in many of the latest plates the surface appears continuous to the naked eye. When etched with acid, however, the face is found to be covered with a network of fine lines and presents an appearance similar to that of crackled glass.

297. Classification of Armor.—The Navy Department specifies Class A armor of two types, viz., cemented armor and non-cemented

Digitized by Google

armor. In the former the percentage of carbon in the hard face has been increased by the process of carbonization, while in the latter the percentage of carbon is uniform throughout the plates. Both have the characteristic hard face and tough fibrous back, but the cemented armor excels in these respects.

Class A armor is used for the main armor belt of ships and for the heavy armor on the front and sides of turrets.

Class B armor is made of special treatment alloy steel.

While not face hardened and not as hard as Class A armor it has remarkable toughness and ability to resist projectiles at oblique impact. In comparatively thin plates it is much superior in this respect to the harder Class A armor. Class B armor is used for turret tops, deck plates, etc.

Class C armor consist of armor bolts and deck fittings.

Armor Bolts.—The armor plates are fastened to the sides of ships by means of nickel-steel bolts. These are of such strength that they are not broken by the impact of projectiles that badly crack

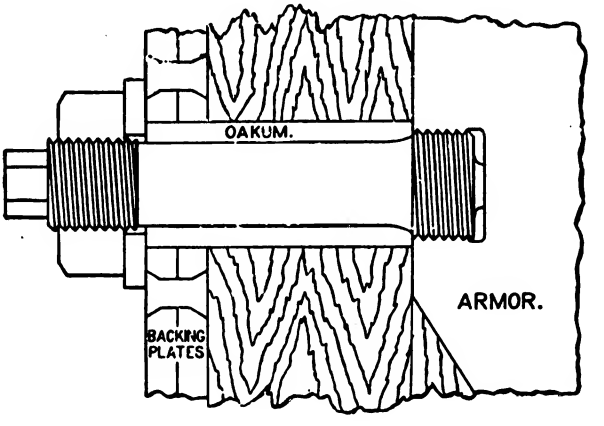

FIG. 219.

the plate. The bolts pass through the sides of the ship and are screwed into the soft back of the armor plate. To insure a good fit of the plate, and at the same time to lengthen the armor bolt so that its deformation per unit of length under the stresses of impact

Digitized by Google

may not be excessive, wood backing is used between the armor plate and the ship's side. The wood backing is being reduced in thickness and the tendency is to discard it altogether. Figs. 219 and 220 show types of bolts for armor with and without wood backing.

The threads on the bolts are all plus threads, so that the bolt is of uniform strength. A calking of marline or oakum surrounds the bolt to prevent leakage through the bolt hole. A steel washer is under the head of the bolt. A rubber washer has also been used under the steel washer to diminish the suddenness of any strain on the bolt head.

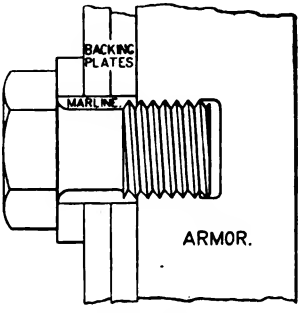

FIG. 220.

Armor bolts vary in diameter from 1.5 inches for plates 5 ins. thick or less to 2.4 ins. for plates 9 ins. thick and upward.

In number they are provided one for every five square feet of surface as far as the framing of the ship will permit.

298. Ballistic Test of Armor.—Armor for ships is tested by firing against it with the best armor-piercing projectiles at striking velocities specified by the Navy Department and revised from time to time as improvements are made in armor or projectiles.

In general the striking velocities for the test of armor are about 200 ft. per sec. lower than the corresponding velocities required for the test of land A. P. projectiles against armor of the same thickness.

Characteristic Perforations.—Characteristic perforations in hardened and unhardened armor are shown in Figs. 221 and 222, the front face of the plate being uppermost in each figure. The face of the hardened armor, Fig. 221, breaks and crumbles under impact, while the metal of the unhardened plate, Fig. 222, being softer and more tenacious, flows under the pressure of the projectile in the direction of least resistance and forms a combing in front of the plate. When the projectile reaches the back of the hardened armor the metal of the back, being prevented from

Digitized by Google

flowing by the hard face, breaks out in one or more pieces, leaving a broad based conical hole through the back and producing but slight bulging of the rear surface of the plate.

As the metal of the unhardened plate is of the same constitution throughout, the perforation does not exhibit the marked

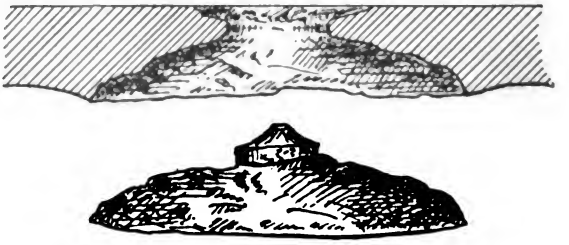

FIG. 221.

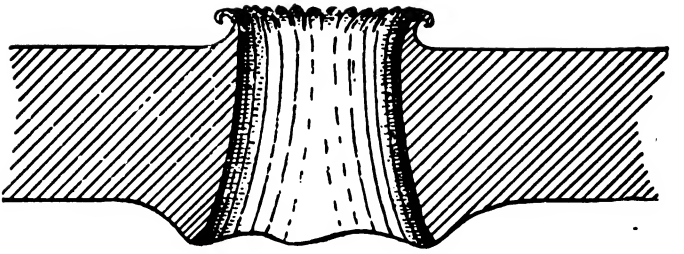

FIG. 222.

differences shown in the hardened plate. The metal of the back part of the plate flows to the rear, producing a greater bulging of the rear surface.

299. Armor Protection for Ships.—The main armor belt extends entirely around the ship. Its width depends upon the size of ship, but in the larger ships it extends 5 ft. below the water line. The thickness of the main armor belt is usually graduated, being greater amidships where the boilers and other machinery and magazines must be protected, and tapering toward the bow and stern.

The gun turrets are protected in front by the thickest armor.

Digitized by Google

Armor of less thickness covers the casemates, barbettes, and sides of the turrets, the thickness depending upon the importance of the part protected and upon its exposure to hostile fire.

The protective deck is of comparatively light armor. It extends over the entire ship, uniting with the bottom of the armor belt. Its purpose is to prevent splinters from exploded shell from entering the body of the ship.

Across the main body of the ship, bow and stern, extends heavy athwartship armor, which, with the armored barbettes and turrets, provides protection to the body of the ship from fire from the front or rear. Thus, with the side armor the main body of the ship becomes an armored box, within which the crew, the machinery, the magazines and the guns are protected.

Gun Shields.—Guns of 6 ins. caliber and less mounted in barbette in seacoast fortifications are provided with shields permanently attached to their carriages.

One type of shield for 5- and 6-in. guns, shown in Fig. 223, is made of Krupp plate $4\frac{1}{2}$ ins. thick. The requirements of the ballistic test for these shields are as follows:

The shield, firmly supported by a backing of oak timbers, is subjected to three shots from a 5-in. gun. The striking velocity of the shot is 1496 ft. and the impact normal. On the first impact, near the center of the shield, no portion of the projectile shall get through the shield, nor shall any through crack develop to an edge of the shield. The other two impacts are so located that no point of impact shall be less than three calibers of the projectile from another point of impact or from an edge of the shield. At the second and third impacts no projectile or fragment of projectile shall go entirely through the shield.

The supports that hold the shield to the carriage are very heavy ribbon-shaped springs, which reduce the stress on the carriage from the impact on the shield. The springs are of great strength in order to withstand the shock of impact. They are made of steel with a tensile strength of 110,000 lbs., elastic limit 75,000 lbs., elongation at rupture 15%, contraction of area 25%.

Digitized by Google

The fastening bolts must have a tensile strength of 80,000 lbs., and an elongation at rupture of 27%.

The shields are curved around the front of the carriage and are inclined upward and to the rear at an angle of 40°. The chase of the gun protrudes through a hole in the shield and other holes are provided for sighting purposes.

Fig. 223 shows the arrangement of the shield on a 6-in. barbette carriage.

Some of the latest 6-in. barbette carriages, model of 1910, are provided with cast-steel shields of manganese steel. These shields are 5.3 ins. thick instead of $4\frac{1}{2}$ ins. They are required to undergo successfully the same ballistic tests as the $4\frac{1}{2}$ in. shields of Krupp armor.

Shields for 15-pdr. Guns.—Shields for 3-in. 15-pdr. seacoast guns are of nickel steel 2 ins. thick. No ballistic test is required for the acceptance of these shields, but the metal must show a tensile strength of at least 125,000 lbs. per sq.in. and an elongation of 10%.

Shields will probably be provided for all barbette carriages.

Shields for Mobile Artillery.—On account of limitation as to weight shields for mobile artillery are intended only for protection against small arms bullets, shrapnel balls and shell splinters. Plates 0.2, or more recently 0.1 to 5-in. thick are used for this purpose. They are tested by firings at a range of 100 yds. with the .30 caliber rifle, using steel jacketed bullets with 2700 ft. muzzle velocity. The fronts of ammunition chests are made of the same material. It is likely that the same material will be used for the protection of armored motor cars.

Digitized by Google

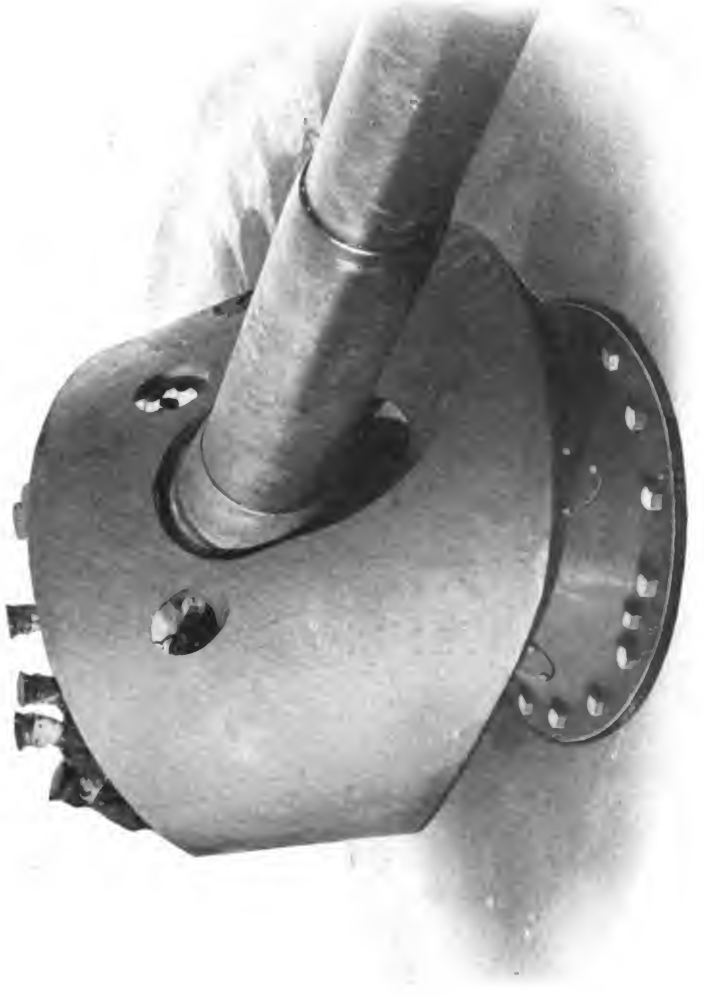

FIG. 223.—6-inch Gun on Pedestal Mount with Shield.

Digitized by Google

CHAPTER XI

PRIMERS AND FUSES FOR CANNON

300. Primers are devices used to ignite the propelling charges in guns.

Classification.—Primers are divided, according to the method by which they are fired, into three classes:

(*a*) Friction primers,
(*b*) Electric primers,
(*c*) Percussion primers.

Combination primers are those so constructed that they may be fired by any two of the above methods, usually by the electric and one of the other methods.

Primers should be certain in action, safe in handling and not liable to deterioration in storage. They should be as simple in construction and low in cost as requirement with these conditions permits.

Primers are also classified as obturating on non-obturating, depending upon whether or not they keep the vent closed while the gun is being fired.

Friction Primers. Friction Composition.—The friction composition used in all friction primers consists of a mixture of chlorate of potash, sulphide of antimony, ground glass and sulphur. In some primers a small percentage of gum arabic is used to form a matrix for the friction composition. A friction primer of the non-obturating type and a combination friction electric primer of the obturating type will be described in detail. The former is no longer used in the service for modern guns.

Common Friction Primer.—This primer, shown in Fig. 224, is non-obturating.

Digitized by Google

The body *b* and the branch *d* are copper tubes. The tube *b* is filled with rifle powder, and is closed at its lower end by a wax stopper *a*. The tube *d* is filled with the friction composition. Imbedded in the friction composition is the serrated end of the copper wire *c*, the other end of the wire being formed into a loop for attachment of the hook of the lanyard. The outer end of the tube *d* is closed over the flattened end of the wire, which is bent

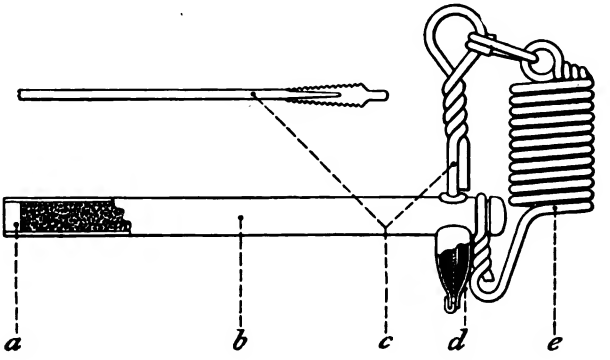

FIG. 224.

over into a hook, as shown, and serves to hold the wire securely in place except when a stout pull is given to the lanyard. The pull on the lanyard straightens out the hook and draws the serrated wire through the friction composition, igniting it. The fire is communicated to the rifle powder in the tube *b*, and thence through the vent to the powder charge in the gun.

For use in axial vents, in order to prevent the primer being blown to the rear among the men of the gun detachment, a coiled copper wire *e* is added to the primer, one end of the wire being made fast to the top of the primer body, the other end to the loop for lanyard hook. The coil is extended by the pull of the lanyard, and the primer when blown to the rear remains attached to the lanyard.

301. Service Combination Friction Electric Primer.—This is the principal primer used in our service in guns using separate

Digitized by Google

loading ammunition. It is used with the firing mechanism of seacoast guns described in Chapter VI. A longitudinal section

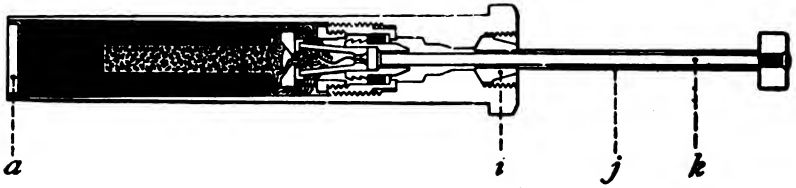

FIG. 225.

of the primer and an enlarged section of the igniting elements are shown in Figs. 225 and 226.

The igniting elements are assembled in the brass case *f*, which is screwed to its seat in the primer.

Friction Elements.—For firing by friction there is pressed into the case *f* an annular pellet of friction composition shown in black in Fig. 226, which rests on a vulcanite washer, *g*. The washer supports the composition and prevents it from crumbling when the pull which fires the primer is applied. The inner end of the firing wire, *k*, is loosely surrounded by the serrated cylinder *h*, which is imbedded up to the serrations in the friction composition. The headed inner end of the firing wire fits in a seat inside the serrated cylinder, and the parts are held securely in place by the forked metal support *e* and the closing nut *b*.

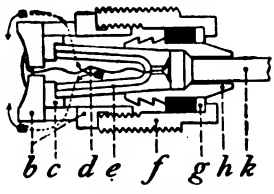

FIG. 226.

When the firing wire is pulled the serrated cylinder is drawn through the composition and ignites it. The conical end of the cylinder *h* is drawn to its seat in the rear part of the primer and prevents escape of gas to the rear. The flame from the friction composition passes through vents in the closing nut, *b*, and ignites the priming charge of compressed and loose black powder in the body of the primer.

The mouth of the primer is stopped by the brass cup, *a*, shel-

Digitized by Google

lacked in place. This cup is blown out by the explosion of the primer charge, and the flames from the primer pass through the vent in the breech block and ignite the powder charge in the gun. The pellet of powder near the mouth of the primer is also blown through the vent and insures the ignition of the charge in the gun.

Electric Elements.—For electric firing the wire *k* is covered with an insulating paper cylinder *j* and enters the primer body through a vulcanite plug *i*. The wire is in electric contact with the serrated cylinder *h*, Fig. 226, but this is insulated from the primer body by the vulcanite washer *g* and the pellet of friction composition, a non-conductor of electricity.

The electrical elements of the primer are assembled in the metal case *f*. The head of the forked metal support *e* is in contact with the headed end of the wire *k*, but not fastened to it. The forked end of the support is held in the vulcanite cup *c*. The brass contact nut *b*, screwed into the end of the case *f*, presses the assembled parts into intimate electrical contact. A platinum wire *d* is soldered to the head of the support *e* and to the contact nut *b*. An igniting charge of guncotton surrounds the wire.

When the primer is inserted in the gun the uninsulated button at the end of the wire *j* is grasped by the parts of an electric contact piece through which the electric firing current passes. The current passes through the wire *j*, the platinum bridge, and the body of the primer to the walls of the gun and thence to the ground.

The passage of the electric current heats the platinum wire, igniting the guncotton and the priming charge of powder.

It will be observed that the friction elements of the combination primer are independent of the electrical elements, and that when one of these primers fails to fire by electrictiy it may still be fired by friction.

If, however, the primer fails in an attempt to fire it by friction, it will not generally be possible to fire it electrically, since the cylinder *h*, which has been pulled into the head of the primer, is out of contact with the part *e* and the platinum wire bridge. The

Digitized by Google

current will then pass directly from *h* through the primer body and gun to the ground.

The primer should in this case be at once removed from the vent and not be again used.

The outer button and wire *k* may be turned without danger of breaking the platinum wire bridge *d*.

When an electric or friction primer fails to fire it should be removed from the vent and the wire bent down and around the primer to prevent attempts to use it again.

The metal parts of the primer are tinned to prevent corrosion.

302. The Electric Primer for Guns using Separate Loading Ammunition.—This primer shown in Fig. 227 is similar to the combination primer just described except that the friction features are omitted. The electric circuit extends from the button 1 through the wire 2, contact plug 3, contact wire 4, and contact sleeve 5, to the body of the primer, all intermediate parts being insulated, as shown.

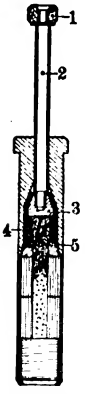

FIG. 227.

This primer is used with guns equipped with the firing mechanism described in Art. 179, when it is desired to fire electrically only. The primer is cheaper and safer than the combination primer and will probably replace that primer to a considerable extent.

Current for Firing Electric Primers.—Current from various sources has been used for firing guns electrically. The objection to taking the current from the electric wires connected with the power plant at the coast fortification is that these wires are liable to be broken in action and that currents are liable to exist in them when they are not expected to be present. Storage batteries and dry batteries have been used as the source of current, but these are subject to rapid deterioration and require constant care.

Hand magnetos such as are used in firing detonating caps have given satisfactory results in firing primers, but the current furnished is not of suitable strength and voltage for the service primers.

Special hand-operated magnetos are now furnished for all guns

Digitized by Google

and mortars to be fired electrically. The magneto for guns is mounted on the sight standard in a convenient position for operation and is designed to fire one primer. The magneto for mortars is of similar design but of greater capacity and capable of firing four primers in parallel at one operation. It is mounted in or near

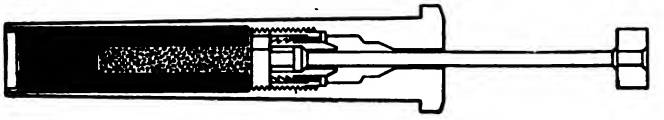

FIG. 228.

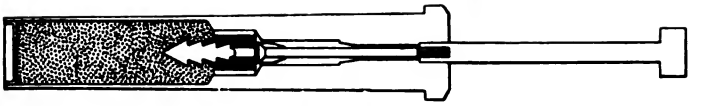

FIG. 229.

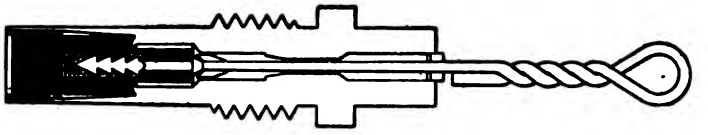

FIG. 230.

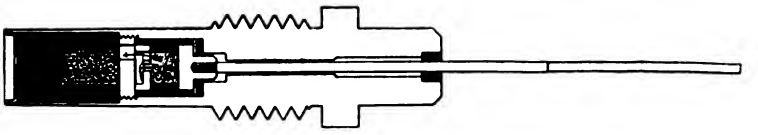

FIG. 231.

the mortar pit and connected by wires with the four mortars of the pit. These magnetos are certain in action, require little care and since there is no voltage in the circuit except when they are operated they afford the safest means of firing a gun electrically.

Other Friction and Electric Primers.—Primers arranged for firing by friction alone are shown in Figs. 228 and 229. The primer shown in Fig. 229, of simple and cheap construction, is for drill purposes only.

Digitized by Google

Older Forms of Primers.—The friction primer shown in Fig. 230 and the electric primer shown in Fig. 231 are still used in old-model guns which are not provided with a firing mechanism. These primers are screwed into the vents in the breech blocks.

303. Primers for Fixed Ammunition.—The primers described are used only in guns using separate loading ammunition. For fixed ammunition a primer without the protruding wire is necessary and the types used are percussion, electric, or combination percussion-electric. These types could also be used in guns using separate loading ammunition if a suitable firing mechanism were provided.

Primers for fixed ammunition are inserted in the bases of cartridge cases as shown in Fig. 16. The diameter of the primer is from $1\frac{1}{2}$ to 2 thousandths of an inch greater than that of its seat. A special press for the insertion of the primers is provided.

The primer seats in cartridge cases are rough bored to a diameter 20% less than the finished size and then mandreled to finished dimensions with a steel tapered plug to toughen the metal of the cartridge case around the primer seat. The toughening is necessary to prevent expansion of the primer seats under pressure of the powder gases and consequent loose fitting of the primers in subsequent rounds.

Two sizes of percussion primers, the 110-grain and the 20-grain, have been adopted for service charges for all guns using fixed ammunition from the 1-pounder to the 6-in. Armstrong.

110-grain Percussion Primer.—This primer is shown in Fig. 232. All metal parts except the tinfoil covering, 6, are of brass. The object of the tinfoil covering is to protect the primer from moisture.

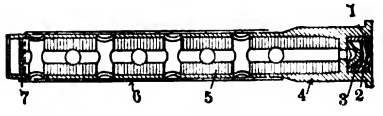

FIG. 232.

The percussion element consisting of the percussion primer cup, 1; the percussion composition, 2, and the anvil, 3, is assembled and inserted into the pocket of the body, 4, as a unit.

Digitized by Google

The percussion composition contains the same elements as the friction composition for the friction primers, but in different proportions, viz.:

Chlorate of potash,
Sulphide of antimony,
Ground glass,
Sulphur.

The same composition is used in all percussion elements except that used in the small-arms cartridge. The presence of ground glass in the percussion element of the small arms cartridge is objectionable on account of the resulting increase in metallic fouling of the bore of the gun. A composition consisting of chlorate of potash, tersulphide of antimony and sulphur is therefore used in the small-arms cartridge.

The primer charge consists of 110 grains of compressed black powder assembled as shown at 5, with an axial and 8 diametral holes. The compression of the powder and the holes cause the primer charge to burn with a torch-like rather than an explosive effect and thus facilitate the ignition of the charge. The holes also direct the flame to different parts of the charge.

Operation of the Percussion Element.—The firing pin striking the cup, 1, indents it and fires the percussion composition, 2, supported by the anvil, 3. The flame from the percussion element fires the main primer charge.

This primer is used in guns from 6-pounder to 6-in. Armstrong, inclusive.

Twenty-grain Percussion Primer.—This primer, shown in Fig.

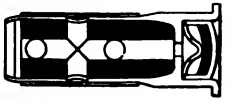

FIG. 233.

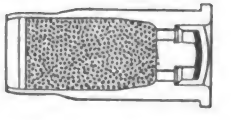

FIG. 234.

233, is identical in principle with the one just described. It is used in 1-pounder guns.

Digitized by Google

Twenty-grain Saluting Primer.—This primer, Fig. 211, costing less to manufacture than the 110-grain primer, is to be used in place of the latter with blank charges only. The primer contains a charge of 20 grains of loose rifle powder. As black powder only is used in blank charges, a smaller igniting charge answers.

304. 110-Grain Electric Primer for Fixed Ammunition.—This primer is the same as the 110-grain percussion primer, except for the igniting element shown in Fig. 235.

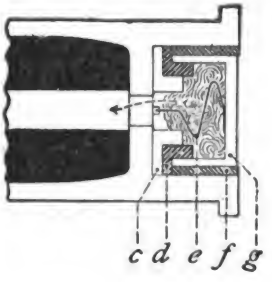

FIG. 235.

The platinum wire bridge, *e*, is soldered at one end to the contact disk, *e*, which is then inserted into the cup, *g*, so as to be in contact with its base. The other end of the platinum wire bridge is soldered to the contact plug, *c*, which is in contact with the body of the primer. The platinum wire bridge is surrounded by gun-cotton. As seen from the figure it forms the only electric path between the contact cup and the body of the primer. The electric element is assembled so as to be inserted into the body of the primer as a unit.

Operation.—Firing mechanisms with which this primer is used have the firing pin insulated and so arranged as to be in contact with the primer when ready for firing. The current passes through the firing pin into the contact cup, *g*; contact disk, platinum wire bridge, *e*; contact plug, *c*; and thence to body of primer, cartridge case, gun and ground, or return circuit.

Combination Electric and Percussion Primer.—In Fig. 236 is shown a combination electric and percussion primer used in rapid-fire guns in the U. S. Navy. Its construction can be readily understood from the figure. The insulation is shown by the heavy black lines. When fired by percussion the percussion cap is not directly struck by the firing pin, but by the point of a plunger forced inward by the blow.

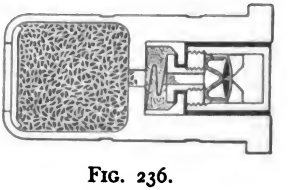
FIG. 236.

Digitized by Google

305. Igniting Primers.—These are special primers designed for igniting the propelling charges of sub-caliber guns mounted in and fired from seacoast guns or mortars not provided with percussion firing mechanisms.

These sub-caliber guns are provided with fixed ammunition, into the cartridge cases of which the igniting primers are assembled. Igniting primers contain no igniting element within themselves, but they are ignited by the flame from a regular friction or electric primer placed in the vent of the breech block in the same manner as for regular firing. Since, to get into the sub-caliber cartridge case, the flame from the regular primer has to pass through a small opening in the igniting primer, there is not sufficient volume of flame to properly ignite the sub-caliber charge.

Igniting primers are therefore provided with a primer charge arranged in the same manner as that of the regular primer. The flame from the regular primer, entering the igniting primer through the small opening, is sufficient to ignite the primer charge, which, in turn, ignites the sub-caliber propelling charge.

The 110-grain igniting primer shown in Fig. 237, and the 20-grain igniting primer shown in Fig. 238, differ from the corre-

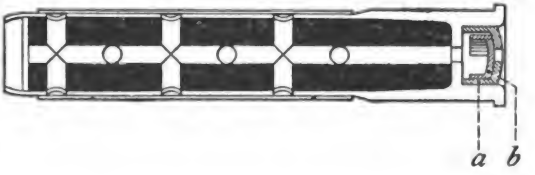

FIG. 237.

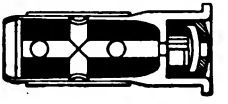

FIG. 238.

sponding percussion primers only in the substitution of the obturating cup, *a*, and the obturating valve, *b*, for the percussion element. These parts are shown in Fig. 238, in the position at the instant of firing and in Fig. 237, in the normal position which is also the position after firing.

Operation.—When the regular primer is fired the flame passes through the vent and through the central hole in the obturating

Digitized by Google

cup, *a*, the pressure of the gases forcing the obturating valve, *b*, forward. Thence it passes through the cutaway sectors of the obturating valve, 2, to the primer charge. As soon as gas pressure is developed in the primer exceeding that in the vent the valve, 2, which has a sliding fit in the cup, 1, is forced back, closing the central opening in the cup and preventing the escape of gas.

Fuses

306. Fuses are the devices used to ignite the bursting charges of projectiles at any point in their flight or on impact.

The three general classes are:

Percussion fuses,
Time fuses,
Combination time and percussion fuses.

Fuses are also classified as *delay action* or *non-delay action* fuses depending upon whether or not there is an appreciable interval of time between the action of the fuse and the explosion of the projectile.

There is also a class of fuses known as detonating fuses, used with projectiles carrying high-explosive charges.

Fuses should be certain in action, safe in handling, and not liable to deterioration in storage. They should be as simple in construction as these requirements and the further requirement that they must not burst the projectile while it is still in the bore of the gun, allow them to be made.

Time fuses must act accurately and uniformly at the time for which they are set.

Percussion Fuses.—A percussion fuse is one which explodes the projectile on impact. All percussion fuses act by the forward motion of a plunger in the fuse body, caused by the sudden stopping or retarding of the projectile on impact. This plunger carries a firing pin which in the forward motion strikes the percussion primer and ignites it. To make the fuse safe in handling, the plunger is either so arranged that it cannot move forward until after the pro-

Digitized by Google

jectile is given a high longitudinal acceleration by the pressure of the powder gases, or it is so arranged that the firing pin does not project from it until the projectile has a considerable velocity of rotation due to the rifling.

This gives rise to two kinds of percussion fuses. Those which are prepared for action, or *armed*, by acceleration given to the projectile by the pressure of the powder gases. The fuses of this class used in our service are known as ring resistance fuses, from their construction, which will be described later. Those which are *armed* by the centrifugal force developed by the rotation of the projectile, and are known as centrifugal fuses.

Percussion Primer of Fuses.—The composition used in the primers of all percussion fuses except delay-action fuses is a mixture of the following:

Fulminate of mercury,
Chlorate of potash,
Sulphide of antimony,
Glass.

This is known as the mercuric fulminate primer composition. In delay-action percussion fuses the primer composition is a mixture of the following:

Chlorate of potash,
Sulphide of antimony,
Sulphur,
Ground glass,
Shellac.

This composition was formerly used in all percussion fuses. It gives greater uniformity of burning of the primer in which it is used than the first composition but its certainty of action is not so great.

307. Ring Resistance Fuses.—*Point-percussion Fuse.*—Point-percussion fuses are now used only in 1-pounder projectiles. A cross-section of this fuse is shown in Figs. 239 and 240.

Digitized by Google

The curvature of the head of the body corresponds with that of the head of the 1-pounder projectile in which the fuse is used. The body *a* forms a housing for all the working parts. It is threaded to screw into the projectile and the head is slotted to permit the use of a spanner wrench.

The plunger, consisting of the firing pin sleeve *h* and firing pin *j*, is kept in its normal or unarmed position, as shown in Fig. 239, by the resistance of a split ring, *k*. The acceleration given to the projectile and to the firing pin by the pressure of the powder

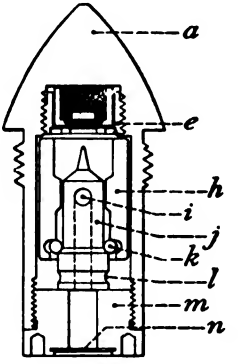

FIG. 239.

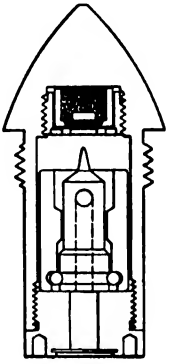

FIG. 240.

gases is transmitted to the sleeve through the split ring. When the force developed by the acceleration of the sleeve becomes greater than a predetermined amount, the split ring will expand and allow the sleeve to slip over the firing pin. The fuse is then in the armed position, as shown in Fig. 240.

The forward end of the plunger cavity is bored out to form a recess for the primer and is threaded with a left-hand thread on the interior for the primer screw, *e*. The primer screw holds the primer cup in place. The latter has two cavities separated by a vented partition. The rear cavity contains the percussion composition, which is protected by the primer shield, and the forward cavity contains the priming charge of black powder. The primer shield, a thin brass disk, prevents dislodgment of the primer com-

Digitized by Google

position in transportation, or by the shock of discharge, and restrains the firing pin during flight of the projectile.

To insure a ready passage of the flame from the primer to the rear, the front end of the sleeve is counterbored, a hole, *i*, through the firing pin at right angles to its axis meets axial hole and a central hole is drilled in the closing cap, *m*. The latter is closed by the closing disk, *n*, which is blown off when the primer is fired.

Operation of the Fuse.—In the unarmed position, Fig. 239, the split ring, *k*, rests on the conical slope of the firing pin. When the gun is fired the longitudinal force applied to the split ring by the acceleration of the sleeve, as explained, causes the split ring to expand over the cylindrical part of the firing pin, permitting the sleeve to move to the rear. In its rearmost position the split ring contracts into the groove near the rear end of the firing pin, thus locking together the firing pin and sleeve. The point of the firing pin now projects above the front end of the sleeve and the fuse is armed, as shown in Fig. 240.

As the projectile meets with atmospheric resistance the plunger, not being subject to this resistance, creeps forward, until the point of the firing pin is stopped by the primer shield. On impact the primer pierces the shield and the thin layer of percussion composition. The small portion of this composition caught between the point of the firing pin and the anvil is ignited, firing the primer charge.

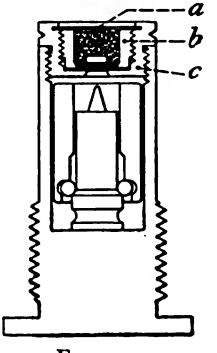

FIG. 241.

Base Percussion Fuse.—A base percussion fuse of the ring resistance type is illustrated in Fig. 241.

It is similar in construction and operation to the point fuse just described, except that since the primer end of the fuse is toward the interior of the projectile, the flame passages of the previous fuse are not needed and are omitted.

The primer cup *b*, containing the percussion composition and priming charge, is closed at its outer end by the brass disk *a*, which

Digitized by Google

is secured in place by crimping over it a thin wall left on the brass closing cap screw *c*.

The act of arming a ring-resistance percussion fuse shortens the plunger and increases materially its longitudinal play in the fuse body. This fact permits a ready and simple means of inspecting for premature arming without dismantling the fuse. If the fuse be held close to the ear and shaken, the marked difference between the play of the plunger in an armed fuse and in an unarmed one can be readily discerned.

308. Arming Resistance of Split-ring Fuses.—The arming resistance of a split-ring fuse is the force required to force the split ring over the enlarged base of the firing pin. In order that the fuse may arm, this force must be less than the mass of the sleeve of the plunger multiplied by the maximum acceleration imparted to the projectile in the gun. The arming resistance is carefully tested during the manufacture of fuses.

If w_s represents the weight of the sleeve and r the arming resistance the ratio w_s/r is a measure of the danger of arming in handling or transportation.

The smaller this ratio the greater the safety in handling or transportation but the greater the acceleration required in the gun to arm the fuse.

The maximum arming resistance which will allow the fuse to arm in a given gun may be calculated as follows:

Let r = the maximum arming resistance in pounds;
w_s = the weight of sleeve in grains;
w = the weight of the projectile in pounds;
d = the caliber of the gun in inches;
P = the maximum pressure in the gun in pounds per square inch;
α = the maximum acceleration of the projectile in the gun in feet per second.

Neglecting friction and rotation of the projectile we may assume that the pressure is wholly employed in accelerating the projectile in translation.

Digitized by Google

The maximum acceleration of the projectile is then

$$\alpha = \frac{\pi g d^2 P}{4w}. \quad \ldots \ldots \ldots \quad (1)$$

The arming resistance in this acceleration multiplied by the mass of the sleeve,

$$\frac{w_s}{7000g},$$

or

$$r = \frac{w_s \alpha}{7000g}. \quad \ldots \ldots \ldots \quad (2)$$

If the actual arming resistance is greater than that obtained by making proper substitutions in this equation the fuse will not arm, if less, the fuse will arm.

For safety in handling the arming resistance with a given weight of plunger should be as high as possible but in order that the fuse may be sure to function in the gun it must always be considerably less than the value given in the above equation.

In a gun having a low maximum pressure and a comparatively heavy projectile, such as the field howitzers, it may be necessary to make the arming resistance so low that the value w_s/r, which measures the danger in transportation may be greater than experience has shown to be desirable.

In such cases a safety wire, to be removed just before firing, anchors the plunger in the fuse and prevents accidents in transportation.

PROBLEMS

1. Determine the maximum permissible arming resistance for a ring resistance fuse in the 3-in. field gun, given the following data:

Maximum pressure, $P = 33{,}000$ lbs. per sq. in.

Weight of projectile, $w = 15$ lbs.

Weight of plunger sleeve, $w_s = 464$ grains.

Diameter of projectile $d = 3$ ins.

2. The actual arming resistance of the above fuse is 220 lbs. What maximum pressure developed in the gun will be just sufficient to cause the fuse to arm?

Digitized by Google

3. It is desired to use a ring resistance fuse in a 12-in. mortar projectile weighing 1046 lbs. to be fired from the mortar with a maximum powder pressure of 12,000 lbs. per sq. in. What must be the weight of the plunger sleeve and the maximum arming resistance so as to make the ratio $w_s/r = 1$, and allow the fuse to arm?

309. Centrifugal Percussion Fuses.—As was shown in the discussion of the ring resistance fuse, the condition of safety in handling requires the arming resistance to be as high as possible while the condition of certainty in action requires the arming resistance to be as low as possible. These conditions are therefore directly opposed to each other and in certain guns neither condition can be satisfactorily fulfilled without infringing on the other except by resorting to a safety wire for safety in handling. The use of the safety wire is objectionable in that it requires the additional operation of removing this wire before the gun is loaded.

To overcome this defect a long series of experiments were made with fuse fitted with centrifugal plungers of various types. The final outcome of these tests was the adoption of the Semple plunger.

"Link Lift" Centrifugal Fuse.—Previous to the adoption of the Semple plunger a fuse containing a plunger of the "link lift" design was used in our service. This fuse with its plunger is shown in Figs. 242 and 243.

The plunger, composed of two halves almost semi circular in section. A lug projecting from the upper part of one of these halves fits into a corresponding recess in the other and forms a bearing for the axis of the firing pin *d*. The upper end of each half is slotted to receive the firing pin, *d*, and the firing-pin link, *c*. The firing-pin link is pivoted at one end to the firing pin, at some distance from its axis, and at the other end to the opposite half of the plunger. By this arrangement moving the plunger halves outward causes the firing pin to revolve so that its point projects above the plunger halves. When the halves are moved outward far enough to place the firing pin in the armed position the end of the link rests on the firing-pin axis, thus giving rigid support to the firing pin when it strikes the primer.

Digitized by Google

The two halves of the plunger are guided in their outward movement by the percussion plunger bushing, *e*. This is fastened securely to the left half and has a free motion through the right half. The arming resistance bolt, *f*, and spring, assembled, as shown, tend to keep the two halves of the plunger pulled together. The outward motion of the halves is limited by the nut of the arming resistance bolt coming in contact with a shoulder on the inside of the percussion plunger bushing. The arming resistance spring is given an initial tension whose amount depends upon the arming resistance the fuse is required to have.

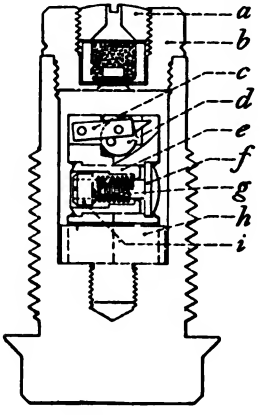

FIG. 242.

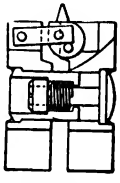

FIG. 243.

FIG. 244.

The strength of this spring is so adjusted that the fuse will not arm until its velocity of rotation is a certain percentage of that attained by the projectile in which it is used, and will certainly arm when its velocity of rotation approximates that of the projectile in which it is used.

Should the halves of the plunger be suddenly separated and the fuse armed on account of a sudden jar in transportation the spring will immediately bring the halves together and unarm the fuse.

To insure the plunger taking the rotation of the projectile, a rotating plug, *h*, also shown in Fig. 244, screwed in the fuse body, engages slots cut through both plunger halves.

310. Semple Centrifugal Plunger.—The centrifugal fuse just described was not entirely satisfactory for the reason that a side blow toward the point of the firing pin tended to unarm it. A side

Digitized by Google

blow of this kind is liable to occur on oblique impact of the projectile against armor or on the ground. To overcome this defect the plunger of the above fuse has been replaced by the Semple plunger shown in Fig. 245.

The firing pin *g*, is mounted on its fulcrum *j*, in a slot in the plunger body *f*. In the unarmed position of the firing pin the two safety pins *h*, each are pressed by their springs into a hole in the

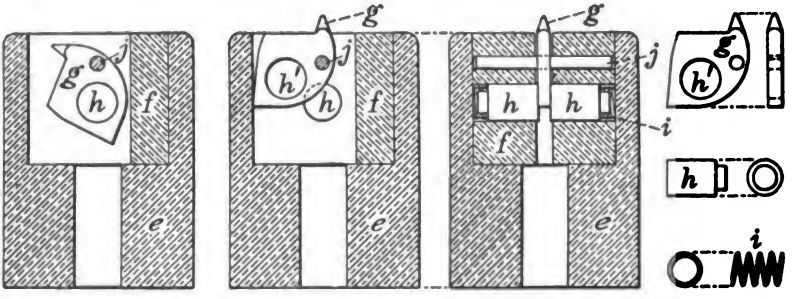

FIG. 245.—Semple Centrifugal Plunger.

firing pin, from opposite sides, and prevent its being turned. A side blow which would tend to make one of these safety pins compress its spring and leave the hole would tend to make the opposite pin remain in the hole. For this reason it is practically impossible for the fuse to arm itself in transportation.

Operation:—When the projectile has attained a certain velocity of rotation, for which the strength of the safety pin springs *i* is designed, the centrifugal forces causes the safety pins to compress their springs and leave the hole in the firing pin. The firing pin is then free to turn about its fulcrum. Its weight is so disposed with reference to the fulcrum that centrifugal force will tend to turn it about the fulcrum and arm it. However, if there is any considerable longitudinal acceleration of the projectile, which is the case until it leaves the muzzle, the disposition of weight of firing pin with respect to the fulcrum is such as to cause a turning effect opposite to and greater than that caused by centrifugal force. This feature prevents the firing pin from arming until the projectile has

Digitized by Google

left the gun. A possible cause of bursting of the projectile in the gun is thus removed.

After the projectile leaves the gun it is subject to retardation due to resistance of the air. The plunger, not being subject to this retardation, tends to creep forward and leave the firing pin in contact with the primer. To prevent this the two restraining springs, not shown in the figure, are placed between the forward end of the plunger and the fuse housing. It is further to be noted that when this plunger is once armed, the disposition of the weight of the firing pin with respect to its fulcrum is such that it will tend to remain armed due to the retardation of the projectile, as in passing through the air or on impact, even if the centrifugal force which originally armed it ceases to act.

Detonating Fuses for High-explosive Shell.—The exterior form of the detonating fuse for high-explosive shell for mobile artillery projectiles and the method of screwing the fuse into the base of the shell is shown at 2 in Fig. 207.

The outline of the detonating fuse for larger shot and shell is shown at 5, Figs. 199 and 200. In these projectiles a screw plug 6, fits over the end of the fuse.

311. Arming Resistance of Centrifugal Fuses.—The arming resistance of centrifugal fuses is, for "link lift" plungers, the strength of the spring holding the two halves together, and for Semple plungers, the strength of the spring pressing in one of the safety pins *h*, Fig. 245.

When the centrifugal force, due to the rotation of the projectile, becomes greater than the strength of the spring, the fuse will arm.

The maximum arming resistance which will allow the fuse to arm as the projectile leaves the muzzle may be calculated as follows:

Let w_s = the weight of one of the plunger halves of the lift link plunger, or of one of the safety pins of the Semple plunger, in grains.

r = the maximum arming resistance in pounds.

Digitized by Google

ρ = the radius, in inches, of the path of the center of gravity of one of the plunger halves or safety pins. The initial value of ρ is the distance from the axis of the fuse to the center of gravity of one of the plunger or safety pin halves when in the initial position.

d = the diameter of the bore in inches.

From Fq. 76, Chapter VI, we have for the velocity of rotation in radians of the projectile as it leaves the muzzle,

$$\omega = \frac{24nV}{md}, \quad . \quad . \quad . \quad . \quad . \quad . \quad . \quad . \quad . \quad (3)$$

where V is the muzzle velocity of the projectile in feet per second and n is the number of calibers in which the rifling makes one turn at the muzzle.

The maximum arming resistance which will allow the fuse to arm is equal to the centrifugal force developed in the plunger half by the velocity of rotation of the projectile, or, we have,

$$r = \frac{w_s \omega^2 \rho}{84{,}000g}. \quad . \quad . \quad . \quad . \quad . \quad . \quad . \quad . \quad . \quad (4)$$

If, at the beginning, the actual arming resistance is less than the value of r given by this equation the fuse will begin to arm. The value of ρ and, consequently, of r will then increase and since the spring is being compressed the value of the actual arming resistance will also increase. In order that the fuse, once having started to arm, may completely arm the spring must be so designed that the actual arming resistance at each position of the plunger halves is less than the value of r for the corresponding position.

PROBLEM

1. Determine the maximum permissible arming resistance for the link lift centrifugal fuse in the 12-in. mortar projectile, for which we have the following data:

Weight of plunger complete, 660 grain

Weight of plunger half, $w_s = 330$ grains.

Radius of center of gravity of plunger half, $r = 0.4$ in.

Digitized by Google

Twist at muzzle, $n = 25$.

Muzzle velocity of projectile, $V = 950$ f. s.

Diameter of projectile, $d = 12$ ins.

2. Assume that the spring in the plunger of the fuse for the 12-in. mortar projectile of Problem 1 is under a tension of $1\frac{1}{2}$ lbs. What muzzle velocity is required in the projectile to arm the fuse.

Ans. $V = 697.14$ ft. per sec.

3. What is the minimum muzzle velocity that will arm the link lift centrifugal fuse described below, when fired from a 6-in. howitzer?

Weight of plunger half, $w_s = 400$ grains.

Radius of center of gravity of plunger half, $\rho = 0.5$ in.

Spring resistance to arming, $r = 2$ lbs.

Twist of rifling at muzzle, $n = 25$.

Diameter of projectile, $d = 6$ in. *Ans.* $V = 327$ ft. per sec.

4. One of the safety pins of the Semple plunger weighs 8 grains and its center of gravity is 0.15 ins. from the center line of the fuse.

What must be the arming resistance of the fuse to just permit arming when fired in the 3-in. field gun with a velocity of 800 ft. per sec.? Twist of rifling at muzzle, $n = 25$.

312. Combination Time and Percussion Fuses.—All combination fuses used in the service are point insertion and combine the elements of time and percussion arranged to act independently in one fuse body. They are used only with shrapnel.

Combination fuses contain two plungers and two primers. One plunger, the time plunger, is armed by the shock of discharge and fires its primer immediately, igniting the time train of the fuse. The other plunger, the percussion plunger, is also armed by the shock of discharge but fires its primer on impact of the projectile.

Service Combination Fuse.—The upper part of the fuse, Fig. 246, contains the time elements; the lower part the percussion elements. The time elements consist of the concussion or time plunger *b*, the firing pin *c*, and the time train. The firing pin is fixed in the body of the fuse, and the plunger carries the percussion composition and a small igniting charge of black powder. The plunger is held out of contact with the firing pin by the split resistance-ring *a*. On the shock of discharge the inertia of the plunger acting through the conical surface in contact with the split ring expands the ring

Digitized by Google

so that the plunger can pass through it and carry the percussion composition to the firing pin.

Time Train.—The time train of the fuse is composed of two rings of powder, *f* and *h*, contained in grooves cut in the two time-train ring, *m* and *n*. The grooves are not cut completely around the rings, but a solid portion is left between the ends of the groove in each ring. Mealed powder is compressed into the grooves under pressure of 70,000 lbs. per sq.in., forming a train 7 ins. long, the combined length of the two grooves.

The flame from the percussion composition passes through the vent *d*, igniting the compressed tubular powder pellet *e*, which, in turn, ignites one end of the upper time train *f*. When the fuse is set at zero, as shown in Figs. 246 and 247, the flame passes immediately from the upper time train through the powder pellet *g* to one end of the lower time train *h*; thence through the pellet *i* and vent *j* to the powder *k* in the annular magazine at the base of the fuse; thence through six radial vents in the bottom closing screw to the exploding charge in the shrapnel. The vent in the upper time ring, at *e*, is closed with a paper cover fastened on with shellac; and the vent in the lower time ring at *t* is closed with a brass disk covered with shellac.

For some years until recently the friction composition of the pellet in the time plunger contained no fulminate of mercury. Fulminate of mercury will hereafter be used in the friction composition, as it is found that by its use the time train is more quickly and uniformly ignited resulting in more uniform burning of the fuses. In the latest fuses also the cross-section of the channel *d* has been increased, which, in connection with the fulminate of mercury friction composition of the time plunger, enables the fuse to burst the shrapnel closer to the muzzle when it is set at zero and the shrapnel is fired for canister effect.

Under each of the time rings is a felt washer, *o* and *p*, that closes the joint under the ring against the passage of flame, except through the hole in the washer directly over the vent in the part below. The upper washer *o* is glued to the upper corrugated surface of the

Digitized by Google

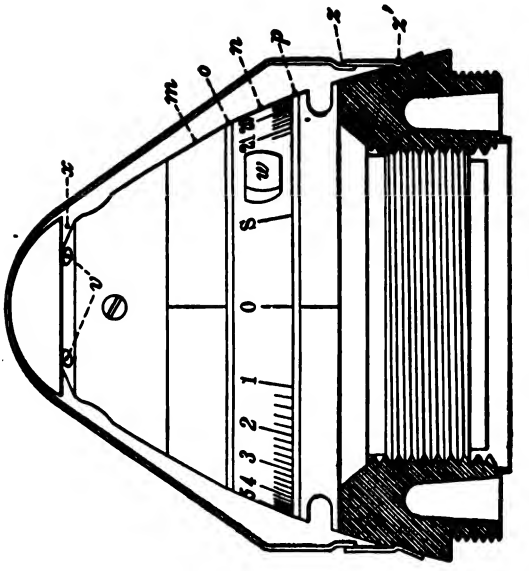

FIG. 247.—Elevation.

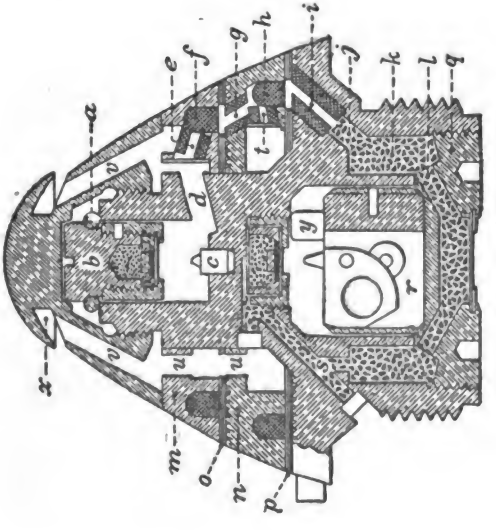

FIG. 246.—Section.

Digitized by Google

lower time ring and moves with the ring. The lower washer *p* is glued to the fuse body and is stationary. The upper time ring *m* is fixed in position by two pins halved into the fuse body and the ring. The lower time ring is movable, and any of the graduations on its exterior, see Fig. 247, which correspond to the seconds and fifths of seconds of burning, may be brought to the datum line marked on body of fuse below the ring. The ring is moved, in setting, by means of a wrench applied to the projecting stud *w*.

313. To Set the Fuse.—To set the fuse for any time of burning, say twenty seconds, move the lower time ring *n* until the mark 20 is over the datum line. On ignition of the primer the flame ignites the upper time train *f*, which burns clockwise, looking from base to point of fuse, until the hole through the washer over the zero mark of the lower ring *n* is encountered. The flame then passes through the vent *g* to the lower time train *n*, which burns anti-clockwise until the mark 20 is reached. This mark being over the vent *i* in the body of the fuse, the flame now passes to the magazine *k*. The setting of the fuse consists in fixing the position of the passage from the upper to the lower time train, so as to include a greater or less length of each train between the vent *e* and the vent *i*.

Vents.—In each time ring a vent opens from the initial end of the powder train to a circular channel inside each time ring. Vertical vents *u* lead from these channels upward through the time train rings to vent *u* in that part of the fuse, called the closing cap, surrounding the time plunger above the time rings, to a groove *x* cut around the outside of the closing cap a short distance below the point of the fuse. This groove is circular but its top and bottom sides instead of being horizontal slope upwards toward the point of the fuse in such manner that the top surface of the groove projects like a hood or umbrella over the openings from the vertical vents into the groove. These vents afford a passage to the open air for the flame from the burning time train, thus preventing the bursting of the fuse by the pressure of the contained gases. The vents just described are called " hooded vents " and are provided in the latest combination fuses. In these vents the opening to the outside is

Digitized by Google

protected from the force of the air while the projectile is in flight and greater uniformity of burning of the time train has resulted on this account. Formerly the vents from the time train were horizontal and led directly to the outside of the fuse.

Safety Position.—When the fuse is set at safety, indicated by the letter S stamped on the lower time ring, the solid metal between the ends of the upper time train is over the vent *g* to the lower train, and the solid metal between the ends of the lower train is over the vent *i* leading to the magazine. In case of accidental firing by the time plunger, the upper train will be completely consumed without communicating fire to the lower train and to the magazine. The fuse is habitually carried at this setting, which serves also when it is desired to explode the shell by impact only.

Percussion Plunger.—For percussion firing the fuse is now provided with the Semple centrifugal plunger. The plunger has two restraining springs radially opposite each other, each of six ounces resistance. These springs are seated in the plunger body and bear against the base of the percussion-primer screw seat; the upper end of each spring is encased in a housing, one of which is shown at *y* in Fig. 246. A vent *s* leads from the percussion primer to the annular magazine *k*. Six radial chambers are bored in the bottom closing screw *q*. The central vent in the losing screw is closed by a piece of shellacked linen, held in place by a brass washer, crimped into the bottom closing screw.

These fuses are issued fixed in the loaded projectiles. For protection in transportation the fuse is covered by a spun brass cap soldered at *z* to a soldering strip which is crimped onto the head of the projectile at *z'*. The soldering strip is torn off and the cover removed before using the projectile.

A twenty-one-second fuse of this pattern is in use for 3-in. field gun ammunition.

A thirty-one-second fuse of the same pattern is in use for larger guns and field howitzers. This fuse is made larger to accommodate the longer time train required in these guns. It is provided with a

Digitized by Google

safety wire through the concussion plunger owing to the low resistance of the split ring of that plunger, rendered necessary by the use of this fuse in the low-pressure field howitzers.

314. Combination Fuse, Old Pattern.—As the former model of combination fuse may perhaps still be encountered in service, it is illustrated here. The time train, *b* Fig. 248, is made by filling a lead tube with mealed powder and then drawing the filled tube through dies until its diameter has been reduced to the desired dimension. The powder train is thereby given practically uniform density, so that it burns more uniformly than the time trains of previous fuses. The results, however, were not so good as the results obtained with fuses of the present service model.

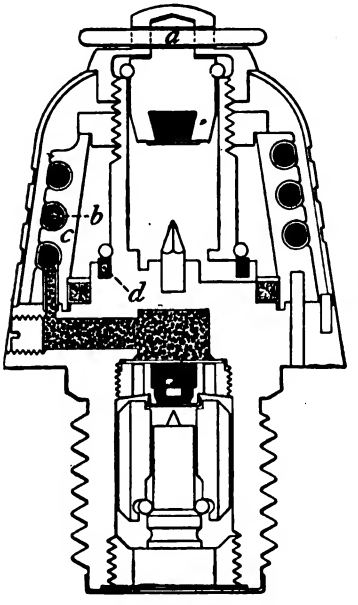

FIG. 248.

The time train, *b*, incased in the lead tube, is wound spirally around the lead cone *c*. To set the fuse for any time of burning the time train and lead cone are punctured, by means of a tool provided for the purpose, at the point of the scale marked on the cover of fuse corresponding to the time of burning desired. The puncture passes completely through the time train and the lead cone behind it, forming a channel from the annular space in which the letter *b* appears to the powder in the time train. When the projectile is fired the flame from the percussion composition ignites the compressed powder ring *d*, and the flame from this ring ignites the time train at the point at which it has been punctured. The safety pin *a* retains the time plunger in its unarmed position, and must be withdrawn before placing the projectile in the gun.

Digitized by Google

Two fuses of this pattern were made, one with a fifteen-second time train and the other with a twenty-eight-second time train.

315. Combination Fuse for H. E. Shrapnel.—The combination fuse for high-explosive shrapnel shown in section in Fig. 249 does not differ essentially in its time elements from that just described. It is screwed into the high explosive head of the shrapnel.

The Semple plunger is replaced by a percussion plunger, *i*, in the form of a cylinder with a longitudinal slot, through which passes the firing pin, *j*, supported by a bushing, *h*, screwed into the body of the fuse.

Forward motion of the percussion plunger will cause the primer to strike the point of the firing pin, but such motion is prevented by a cap, *k*, covering a forward extension of the percussion plunger, coming in contact with a compressed pellet of powder contained in a screw cup, *f*, screwed into the body of the fuse.

When the time plunger acts the flame from the primer burns out the compressed pellet and permits the percussion plunger to move forward on impact.

The detonating charge of the fuse is shown at *w* and *x*, and the main high-explosive charge of the explosive head at *d*.

When the fuse is set for time the flame from the time train follows the compressed powder tube *g'* in passing to the base charge of the shrapnel.

Mechanical Time Fuses.—Powder time train fuses give quite accurate timing of the explosion of shrapnel in guns having trajectories similar to that of the 3-in. field gun. When used in higher-powered, higher-velocity guns the results are less good, due either to mechanical deformation of parts of the fuse, or to irregularity of air pressure at the burning time trains. Even more irregular burning of time trains appears to take place in these fuses when fired from low-velocity howitzers or mortars at high angles of elevation. The variation in the position of the projectile with reference to the trajectory appears to be great enough in these guns, from round to round, to cause great variation in air pressure around

Digitized by Google

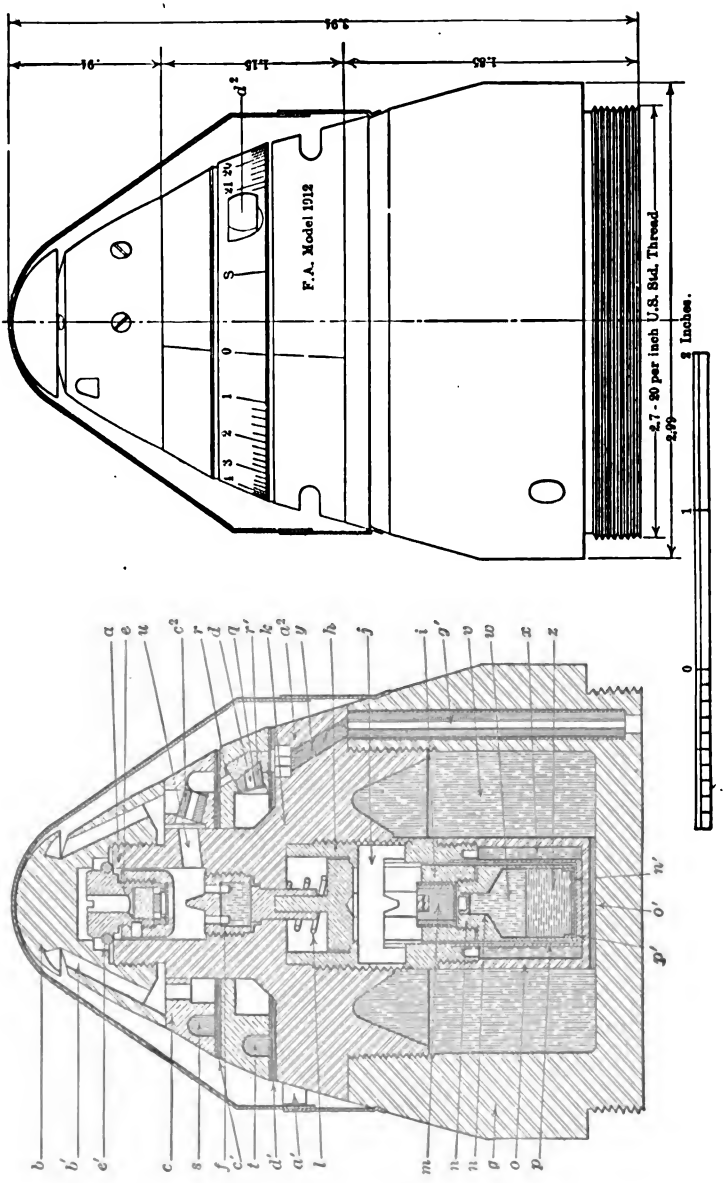

FIG. 249.

Digitized by Google

the nose of the projectile and within the fuse, thus causing irregular burning.

In mechanical time fuses the compressed-powder time trains are discarded and the fuse is made to act at the desired time after firing by some mechanical movement within itself. Dozens of different types have been tried, but it is only recently that really successful mechanical fuses were devised. The successful fuses, which are of the clockwork variety, are apparently not subject to the irregularities of action enumerated above as applying to time train fuses.

It is likely that mechanical time fuses will eventually entirely displace the present powder time-train variety.

316. The Fuse Setter.—The fuse setter is a device for the rapid and accurate setting of the time fuse in the field gun projectile. It is attached to a hinged bracket on the caisson for the field gun, in a position convenient for the cannoneer who serves the caisson.

The base of the fuse setter, Fig. 250, is fixed to the bracket on the caisson. Mounted on the base are two movable rings called the corrector ring and range ring. The range ring carries the range scale graduated in yards, and the corrector ring carries an index or pointer that moves between the corrector scales that are fastened to the fixed cover. The base and the two rings are bored out conically to fit over the combination time and percussion fuse used in the 3-in. projectile. The corrector ring is notched to receive the rotating stud, *w*, Fig. 247, which projects from the time train ring of the fuse. A spring plunger projects inwardly from the range ring of the fuse setter.

A guide fixed to the base serves to direct the point of the projectile into the socket of the fuse setter and to support the cartridge during the operation of fuse setting.

To set the fuse for the time of burning corresponding to any range, as 1000 yds., the range ring is turned by means of the range-worm handle until the 1000 mark on the range scale is opposite the datum line marked on the corrector scale, see Fig. 250. The weather-proof cover of the time fuse in the projectile is stripped off

Digitized by Google

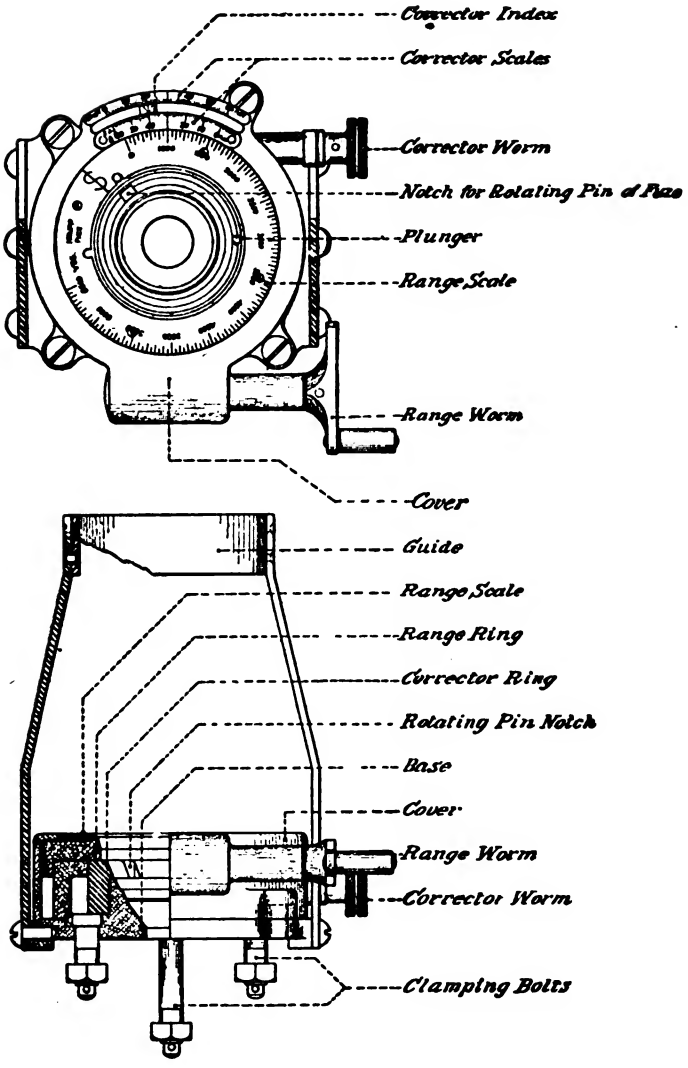

FIG. 250.—Fuse Setter for 3-inch Projectiles.

Digitized by Google

and the point of the projectile is then placed in the fuse setter, the rotating stud on the fuse engaging in the notch in the corrector ring. The cartridge is then turned slowly in a clockwise direction until the spring plunger, which has been pushed in by the insertion of the fuse in the fuse setter, is forced out into a notch prepared for it in the body of the fuse. The plunger prevents further rotation of the cartridge, the time fuse of which has now been set to the proper time of burning for 1000 yds.

The rate of burning of different fuses of the same lot will be uniform, but it may vary slightly from the rate of burning used in the graduation of the scale of the fuse setter. This must be determined by actual firings, and if after a few shots it is found that the projectiles burst short of or beyond the range for which the time fuse is set, or if the height of burst is not exactly as desired, a correction is made in the setting of the fuse by means of the corrector ring in the fuse setter.

The height of burst may be increased or diminished by turning the corrector ring, by means of the corrector-worm thumb nut, to increase or diminish the corrector scale reading.

A point on the corrector scale corresponds to a difference of one mil in the height of burst.

A hand fuse setter based on the same principles but made lighter and applied to the fuse by hand is also furnished as a part of the equipment of the 3-in. field gun.

The hand fuse setter is used entirely for setting the fuses of the shrapnel for the heavier field guns and howitzers.

Digitized by Google

CHAPTER XII

AIMING DEVICES

317. Purpose.—As shown in exterior ballistics, in order that a projectile from a given gun may reach a given target when fired under given conditions, it is necessary that the gun have a certain elevation and that it point in a certain direction. The elevation will depend upon the range, the relative height of the gun and target and the ballistic conditions. The direction to be given the gun will generally be somewhat to the right or left of the direction of the target, in order that the deflection due to drift, wind and motion of the target, if any, may be neutralized. The required elevation in the plane of fire and direction with reference to the vertical plane containing the gun and target, or some other assumed vertical plane, are determined beforehand, either by calculation or estimate.

The elevating and traversing mechanisms provide means for moving the gun in elevation and direction.

The aiming mechanism includes all the devices necessary for determining when the gun is laid with the proper elevation and direction.

Laying in Elevation.—Guns are laid in elevation by either of the following methods:

(*a*) By means of the sights the required angle of elevation is laid off (in a vertical plane) between the axis of the gun and the line of sight, the latter being established by directing the sights upon the target.

(*b*) By means of a quadrant or similar instrument the required quadrant angle of elevation is laid off between the axis of the gun and a horizontal plane, the position of the latter being determined by the level bubble of the quadrant.

(*c*) When guns are mounted on fixed level platforms the required

Digitized by Google

quadrant angle of elevation may be indicated on a range disk or slide which moves with the gun in elevation.

Guns are laid in direction by either of three methods:

(*a*) The necessary angle between the line of sight and the perpendicular plane through the axis of the piece is determined and the sight set accordingly. The piece is then laid by directing the line of sight upon the target.

(*b*) By use of the panoramic sight to be described later, any convenient object may be selected as an aiming point. The angle between this point and the target is determined and corrected by adding or subtracting the angle of deviation caused by wind, drift, etc. The corrected angle is set off on the panoramic sight and the gun is laid by directing the line of vision through the sight upon the aiming point.

(*c*) When guns are mounted on fixed level platforms the required horizontal angle between the gun and some fixed vertical plane, as the meridian plane, is determined and set off on the azimuth circle provided on the base ring.

The aiming devices for any gun consist of one or more of the following parts: Sights, quadrants, range disks or slides and azimuth circles.

318. Direct-laying Sights.—When a piece is laid both in elevation and direction by sighting directly upon the target, the method is known as direct laying.

The line of sight on a gun may be fixed in one of two ways: first, by means of two plain or open sights, the rear one of which has a peep or notch capable of adjustment in vertical and horizontal directions; second, by means of a telescope, whose axis or line of collimation may be given any direction desired.

The necessary adjustments of the line of sight with reference to the axis of the piece are secured by shifting the rear sight vertically and laterally as indicated by *OC* and *EC*, Fig. 251.

In Fig. 251 *O* represents the peep of the rear sight in its zero position, the line from *O* to the front sight *A* being parallel to the axis of the piece. Or the line *OA* may represent the line of coll

Digitized by Google

mation of a telescope, the telescope being pivoted at A. If now we calculate that to reach the target at F, under the conditions prevailing, a certain angle of elevation is required and a certain deviation to the left, we lift the peep of the rear sight to the point C so that OAC is the required angle of elevation, and then move the peep horizontally from C to E to obtain the required deviation. The line of sight is now the line EA, and if the gun is maneuvered so that this line is made to pass through the target, the axis has

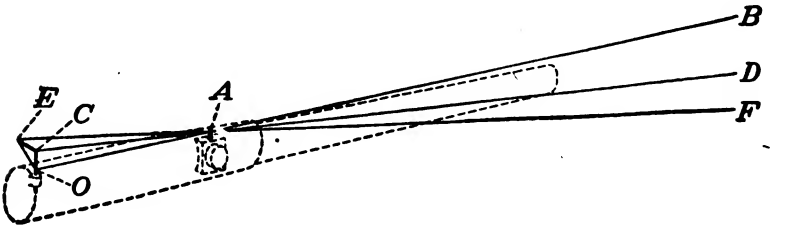

FIG. 251.

then the elevation and deviation required under the existing conditions.

The gun is aimed at the target F, but its axis, parallel to the line CB, is practically pointed at B, which is above F by the vertical distance BD and to the left of F by the horizontal distance DF.

Graduation of Sights.—For the purpose of the vertical adjustment, sights are sometimes graduated in degrees. Since the powder charges are adjusted to give fixed muzzle velocities, the angle of elevation required to attain a given range under normal atmospheric conditions, is fixed and it is more convenient to have the vertical adjustment of the rear sight graduated directly in ranges instead of in degrees, and this is generally done.

The horizontal adjustment is graduated in the case of the sea-coast mounts in degrees with a least reading of .05°, and in the case of the mobile artillery in mils. A *mil* is an angle which, at any given range, subtends a distance of approximately one one-thousandth of the range. There are 6400 mils in a complete circle.

Digitized by Google

It is apparent from Fig. 251 that if EC is n thousandths of AC, the horizontal distance DF will be n thousandths of AD and practically of the range AF. It is well to bear in mind that the projectile follows the movement of the *rear sight*, going higher as the sight is raised, and to the right or left as the sight is moved to the right or left.

Correction for Drift.—The deviation of the projectile due to drift, which is caused by the rotation of the projectile and the resistance of the air, may be determined for any range by the formulas of exterior ballistics, and thus the curve of drift may be constructed for any gun. If then the rear sight is so constructed that as the peep is lifted in elevation to any range it is automatically moved horizontally just enough to compensate for the drift at that range, the sight makes automatic correction for the drift, and need be further adjusted only for the wind or other atmospheric deviating influences.

In all service guns the drift of the projectile is to the right. The drift increases with the range. The rear sight with automatic drift correction, therefore, moves to the left as it is raised in elevation. In our service, automatic drift correction will be found only in sights for small arms.

319. Correction for Inclination of Trunnion Axis.—The angle of elevation of a gun must be measured *in the vertical plane* through the axis of the piece. It frequently happens that a mobile piece must be fired under conditions in which the axis about which it turns in elevation (trunnion axis) is not level.

In Fig. 252 let r be the point to which the rear sight must be raised, in the vertical plane of the axis, to give to the gun a desired angle of elevation equal to ofr, f representing the front sight. h is a horizontal line in the vertical plane of the axis. Now, suppose the gun to be revolved to the left about the line of which is parallel to its axis. The axis of the gun will remain parallel to its original position, but the point r will revolve to some position r'.

Projecting r' on the vertical plane, at r'', we see that the angle of sight ofr' produces an angle of elevation ofr'', which is less than the

Digitized by Google

desired angle *ofr*. It is apparent too that the line of sight through *r'* will cause the gun to be pointed to the left of the plane of *ofr*.

If, however, the sight is pivoted on the line *of* as an axis, we are enabled, when the trunnion axis of the gun is inclined, to rotate the

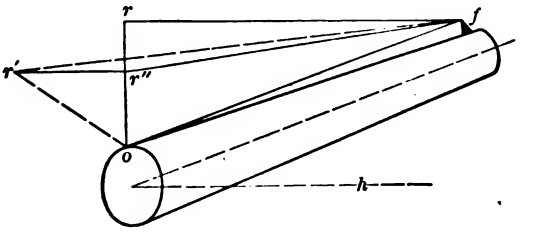

FIG. 252.

sight arm from the inclined position *ar'* to the vertical position *ar*, in which it will subtend the desired vertical angle *ofr*.

It is therefore essential that the rear sights for guns that are likely to be fired on uneven sites shall be so constructed that the sight arm may revolve about an axis parallel to the bore and containing the front sight.

We will find that the rear sights for all guns mounted on wheeled carriages are constructed in this manner.

Guns of position are mounted on carriages that rest on level platforms, and their sights are so adjusted as to always move in a vertical plane.

Location of Sights.—In order that the operation of sighting may not be interrupted by the act of firing, sights are now always placed upon some non-recoiling part of the carriage. The elevating and traversing mechanisms are also under the control of the cannoneer at the sights, so that he is dependent upon no one, but can keep the piece upon the target at all times.

Guns are generally provided with line sights which consist merely of marks on the top of the gun which establish a line parallel to the axis of the bore and assist in giving general direction to the piece. On our field guns they consist of a conical stud on the muzzle of the gun and a notched bar on the breech.

Digitized by Google

320. Independent Line of Sight.—In order to relieve the gun pointer of the responsibility for setting the elevation on the sight standard and elevating the piece, some foreign guns are provided with what is known as the independent line of sight. It will be noted that the actual quadrant elevation of the piece consists of two parts: (*a*) The elevation necessary to reach the target if it were on the same level as the gun, (*b*) the correction to this elevation required by the difference of level of the gun and target (angle of site). With the independent line of sight the two parts of the quadrant elevation are applied to the gun independently and by different cannoneers. One form of mechanism for use with the

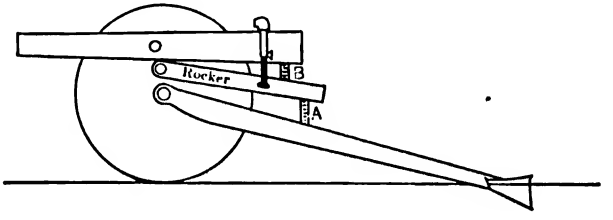

FIG. 253.

independent line of sight is shown in Fig. 253. An intermediate rocker and two elevating systems *A* and *B* are provided.

The sight is fixed to the rocker, and the gun pointer manipulates the lower elevating system *A* which moves the rocker as well as the gun, in elevation. In this way the angle of site is automatically corrected for when the line of sight is brought upon the target.

The other elevating mechanism *B* is between the rocker and the gun and is manipulated by another cannoneer who elevates the gun until the proper range appears on a range scale.

A change in range does not effect the setting of the lower elevation mechanism and the gun pointer is thus free to devote his whole time to keeping his line of sight upon the target and does not have to take his eye from the telescope. The above method has the objection, however, that it is difficult to make the necessary correction in the range drum for difference in level of trunnion axis.

Digitized by Google

There are various other methods of securing the independent line of sight.

One of each general type of the service sights and other appliances used in gun pointing will now be described. The sights mounted on the various guns of older model will readily be understood after a study of these.

321. Sights for Mobile Artillery.—The appliances provided for sighting the 3-in. field piece, and other pieces on wheeled carriages, include line sights, the adjustable or tangent sight, the panoramic sight and the range quadrant.

The line sights are fixed to the gun as already described.

The Adjustable or Tangent Sight.—The adjustable sight consists of a fixed front sight and an adjustable rear sight.

The front sight, supported in a bracket on the cradle, is a short tube, Fig. 254, whose axis is marked by the intersection of two cross wires set in the tube at angles of 45° with the horizon. A bead on top of the tube serves for approximate determination of direction.

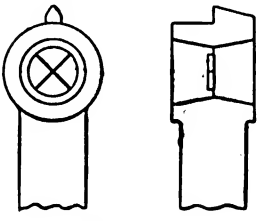

FIG. 254.

The rear sight, Fig. 255, is shown viewed from the left in the left-hand figure, and from the rear in the figure on the right. The rear sight bracket is seated in a socket attached to the cradle of the carriage, on the left side. At the upper end of the bracket two seats are formed for the attachment of the socket for the sight. The seats are faced in a plane perpendicular to the axis of the piece and circular guides are cut on them, with the zero index of the elevation scale as a center.

The shank socket which holds the rear sight is mounted on the bracket and has circular motion on the guides under the action of the transverse leveling screw. This arrangement permits the correction for inclination of site by revolution of the rear site in a plane perpendicular to the axis of the gun until the sight is vertical, as indicated by the cross level fixed to the socket.

The sight shank is an arm curved to the arc of a circle whose

Digitized by Google

center is the front sight. The shank slides up and down in guides in the socket, its movement being effected by the scroll gear handle

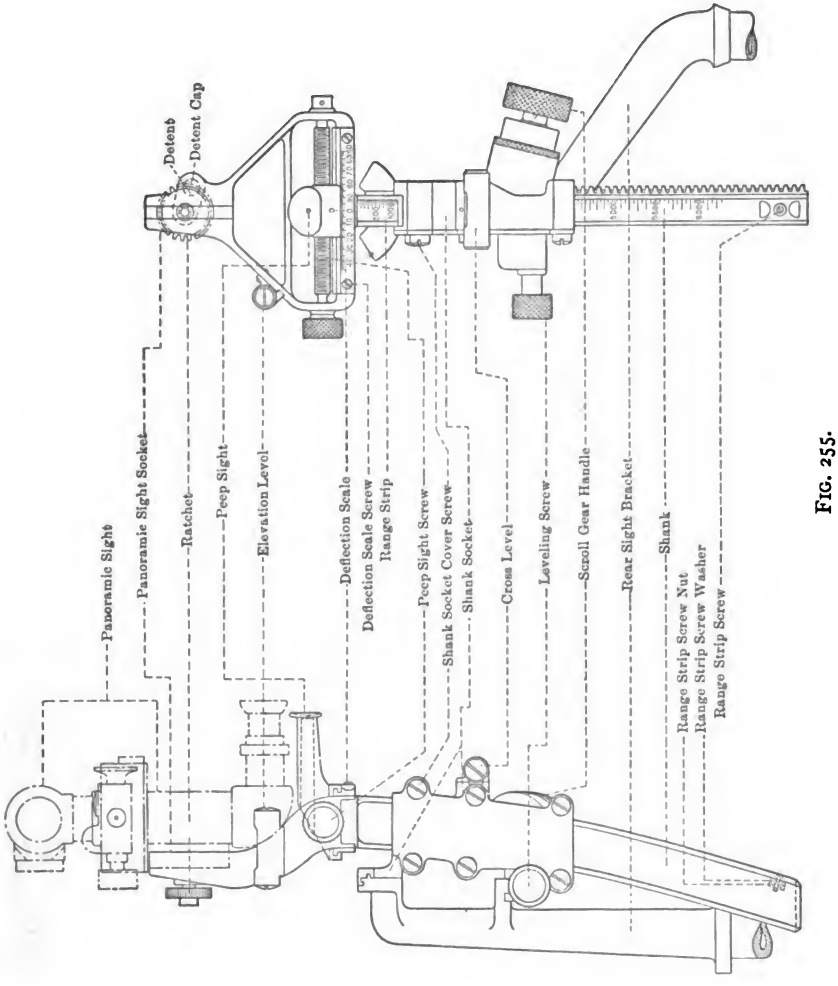

FIG. 255.

through a scroll gear wheel which acts on the teeth of the rack cut on the right face of the shank. The scroll gear is held in mesh by a spring. By pulling out the handle the gear is disengaged from the

Digitized by Google

rack, and a large change in elevation may then be rapidly made by sliding the shank through the socket by hand.

The range scale is marked on the rear face of the shank, and is read at the index at the upper end of the socket. The smallest division of the scale corresponds to 50 yds. of range, but this may be readily subdivided by the eye.

On the upper end of the shank is a frame in which is mounted the peep of the rear sight. The peep is moved to the right or left by means of the deflection screw. The peep hole is 1/10 of an in. in diameter. The divisions of the deflection scale correspond to one mil, 1/1000 of the range. The scale is marked from left to right as follows:

40 30 20 10 0 90 80 70 60

the actual mils being,

40 30 20 10 0 6390 6380 6370 6360

The deflection readings are uniform with those of the panoramic sight and battery commander's telescope. They will be explained later in the description of the panoramic sight.

The sight is continued upward above the seat for the peep to form a seat for the panoramic sight.

The axis of the elevation level is parallel to the line of sight, and thus permits the use of the sight as a quadrant in giving elevation to the piece when the target is not in view.

In the sight for the 6-in. howitzer, the front sight is mounted on the same bar as the rear sight and the bar revolves in elevation about a point near the front sight. The rear sight has a sliding movement in deflection on the end of the bar.

The adjustable sight is often called a tangent sight from its similarity to the sights with straight shanks formerly much used with cannon. The peep of the tangent sight moves on the tangent of an arc instead of on the arc itself. The rear sight for the 30-caliber rifle is a tangent sight.

322. Indirect Laying of Mobile Artillery Guns.—*The Panoramic Sight.*—A gun is said to be laid indirectly when it is laid by means other than aiming directly through the sights to the target.

Digitized by Google

The fire from modern field guns is so accurate and destructive that it has been found necessary to establish field batteries always in positions out of view of the enemy, in order to protect the batteries from the fire of the enemy's guns.

Indirect sighting becomes then of necessity the usual method of sighting guns in battle.

The panoramic sight affords the means of aiming the gun by directing the line of sight on any object in view from the gun. At the same time it offers the advantages of a telescopic sight in direct or indirect aiming.

The panoramic sight is a telescope so fitted with reflectors and prisms that a magnified image of an object anywhere in view may be brought to the eye without change in the direction of sight.

Panoramic sights for the modern field guns and howitzers are shown in Figs. 256 and 258. The former is the older type and will be described in detail.

The rays of light from the object viewed enter the sight through the plain glass window in the head piece and are bent downward by the prism of total reflection *A*, rectified vertically by the prism *B*, focussed by the object lens *C*, and rectified laterally by the gabled prism *D*, so that there is presented to the eyepiece *E*, a rectified image of the object, which image is magnified by the two lenses of the eyepiece.

The magnifying power of the instrument is 4 and the field of view is 10°.

The Rotating Prism.—The interior tube containing the prism *B* and the objective *C* is mounted so that it may rotate in the body of the telescope.

The prism *B* is rectangular in cross-section. Its upper and lower faces are oblique to its axis, and its length is such that a ray that enters the prism axially emerges axially. Every ray entering parallel to the axis, therefore, emerges at an equal distance on the other side of the axis. A vertical ray entering the prism at *a*, Fig. 257, is reflected by the back of the prism and emerges at *c*. Now

Digitized by Google

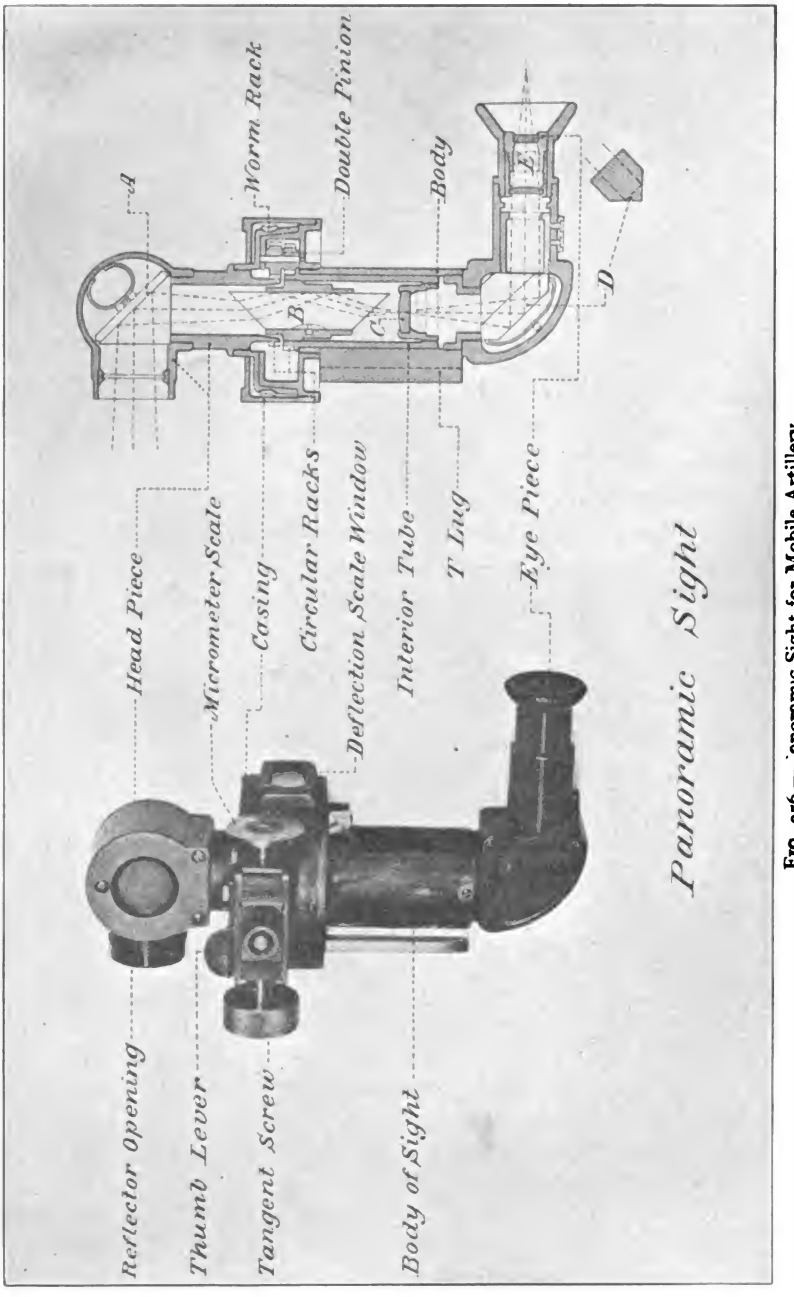

FIG. 256.—Panoramic Sight for Mobile Artillery.

Digitized by Google

if the prism is revolved through any angle, say 45°, as represented in the figure by the position shown in broken lines, the ray *a* will emerge at *e*, the back of the prism now being at the angle of 45° with its original position; and the angle through which the ray has moved, measured from the axis of the prism, which is the axis of rotation, is 90°. The angular movement of the ray is therefore double the angular movement of the prism. Consequently the image of an object seen through the prism rotates through twice the angle of rotation of the prism.

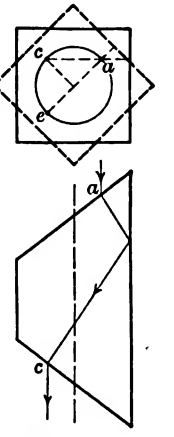

FIG. 257.

The head piece containing the prism *A* is also mounted to rotate on the body of the telescope, and in order to counteract the doubled angular movement of the image by the prism *B*, the head piece is made to rotate twice as fast as the prism. The image of any object then rotates through the same angle as the head piece, and the relative positions of objects in the field of view are not changed.

The different movements of *A* and *B* are accomplished by means of one tangent screw through gearing contained in the cylindrical casing seen at the junction of the rotating parts.

The Graduated Scale.—The angular movement of the head piece is indicated by a graduated scale on its perimeter, visible through a window in the rear of the casing. When the index on the casing is at the zero of the scale, the line of sight of the panoramic sight is in the vertical plane parallel to the axis of the piece. If at the same time the tangent sight on which the panoramic sight is mounted is at the zero of the elevation scale, the line of sight of the panoramic sight is parallel to the axis of the piece.

In the scale on the head piece the circle is divided in 64 equal parts, numbered clockwise. One complete turn of the tangent screw moves the head piece through one of these angles. A micrometer scale mounted on the shaft of the tangent screw has 100 equal divisions. A movement of the tangent screw through one of the divisions of the micrometer scale therefore moves the head piece

Digitized by Google

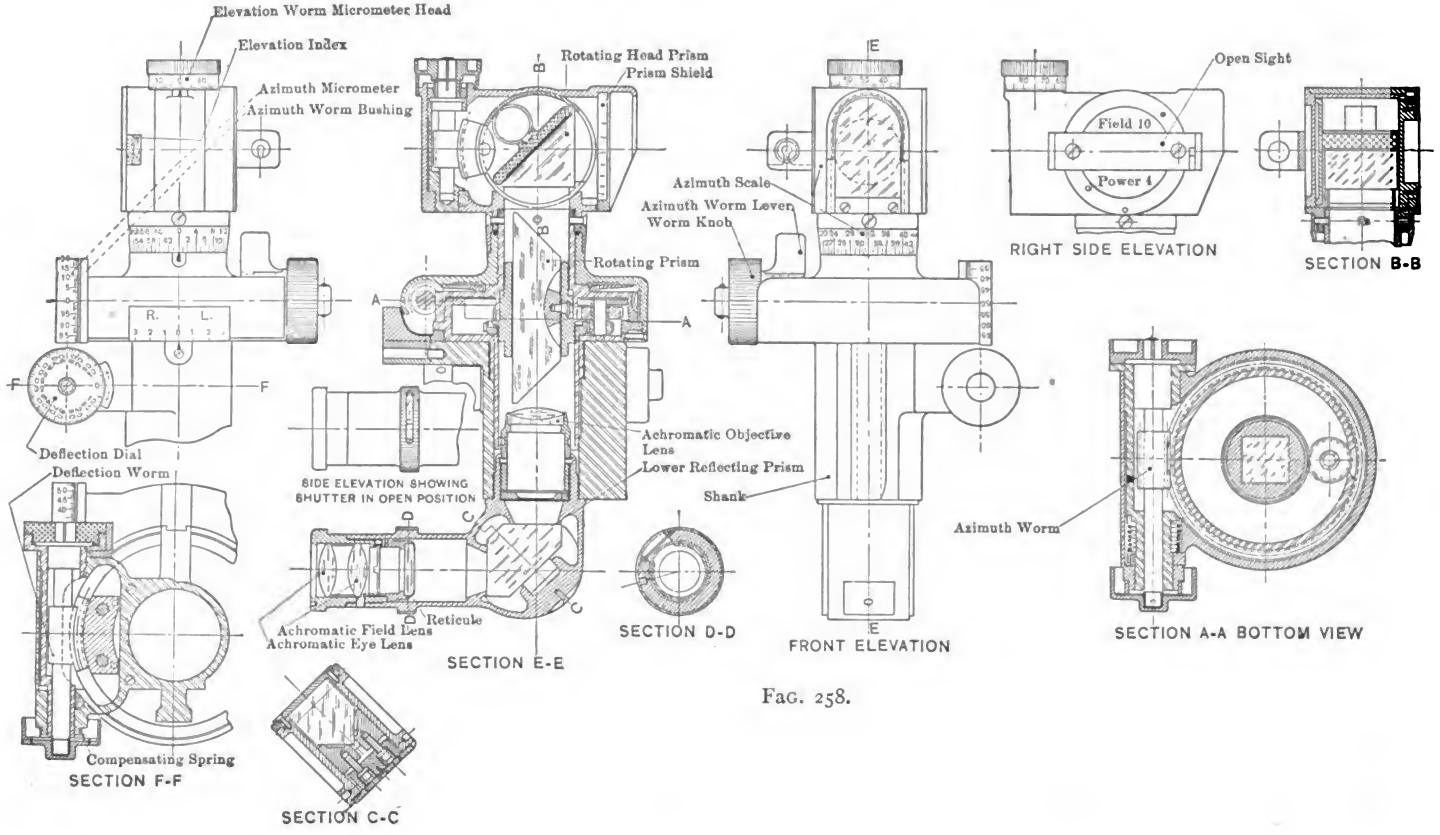

FIG. 258.

Digitized by Google

through 1/6400 of a circle, which angle corresponds very closely to 1/1000 of the range. The reading of the scales is in 6400ths of the circle. The hundreds are read from the scale on the head piece, and tens and units from the scale on the tangent screw. Thus, if the index has passed the mark 27 on the head scale, and the index of the micrometer scale stands at 18, the reading is 2718.

Referring now to the readings on the deflection scale of the tangent sight, Art. 321, we see that the first reading to the left of the zero, which is 10, indicates a position of the tangent sight parallel to the position of the panoramic sight when the index of the scale on the head of the panoramic sight is between 0 and 1 of the scale, and the index of the micrometer scale is at 10. Similarly the reading 90, to the right of the zero, indicates the position of the panoramic sight between 63 and 64 of the head scale with the micrometer scale at 90. The reading of the panoramic sight is then 6390.

323. Improved Panoramic Sight.—The 1915 model, shown in Fig. 258, differs from the above chiefly in the provision made for rotating the upper prism about a horizontal axis perpendicular to the line of vision and for setting off deflections.

The rotating head prism is turned around its horizontal axis by means of the elevation worm micrometer head. The readings of the scale on the scale on the rear of the head indicate the angle in hundreds of mils of the line of vision above or below the horizontal. Units and tens are given by the micrometer head. The effect of the rotating head is to permit a wider selection of aiming points which may be a considerable distance above or below the horizontal plane throughout the gun.

The deflection scale is graduated in hundreds of mils from 0 to 3 on each side of normal. Units and tens are set off on the dial *F*. The use of this scale permits the gunner to make additions or subtractions, in changing target, etc., mechanically instead of applying them to the azimuth reading.

Use of the Panoramic Sight as a Range Finder.—As horizontal angles may be measured with the panoramic sight the sight may be

Digitized by Google

used as a range finder. Using the line between the sights of the flank guns of a battery as a base the triangle formed by the two sights and the target may be determined.

Panoramic Sights for Other Guns.—The panoramic sights for all mobile artillery including howitzers are similar to those of the 3-in. field gun. As the howitzers use different velocities to give different zones in high angle fire, they have a number of scales on the sight shank, one corresponding to each zone.

A description of the method by which the sight for the 6-in. howitzer is made to follow the top carriage in azimuth and the rocker in elevation was given in Art. 231.

324. Range Quadrants for Mobile Artillery Guns.—In rapid firing, the duties of setting the sight for range and deflection, and laying the piece by manipulating the elevating and traversing mechanisms would, if attended to by a single cannoneer, frequently delay the firing much beyond the time required to load. Since in the carriages for mobile artillery the elevating and traversing mechanisms are entirely independent of each other, the pointing of the piece may be much simplified and the time required be considerably lessened by assigning to one cannoneer the pointing of the piece for direction and to a second the elevation of the piece for range. Such a division of duties is provided for in mobile artillery guns by the elevating crank at the right side of the trail and by the range quadrant attached to the right of the cradle. By this arrangement, the gunner on the left of the piece, using the open or panoramic sight, lays for direction only, while the cannoneer on the right of the piece gives quadrant elevations.

The range quadrant, Fig. 259, is supported in a bracket on the right side of the cradle of the carriage with its axis parallel to the vertical plane containing the axis of the piece; and provision is made for rotation of the quadrant about its axis in order that the curved rocker arm of the quadrant may be made vertical when the wheels of the carriage are on different levels. The vertical position of the quadrant arm is indicated by the cross level.

The quadrant consists of a fixed arm of which the rocker is a

Digitized by Google

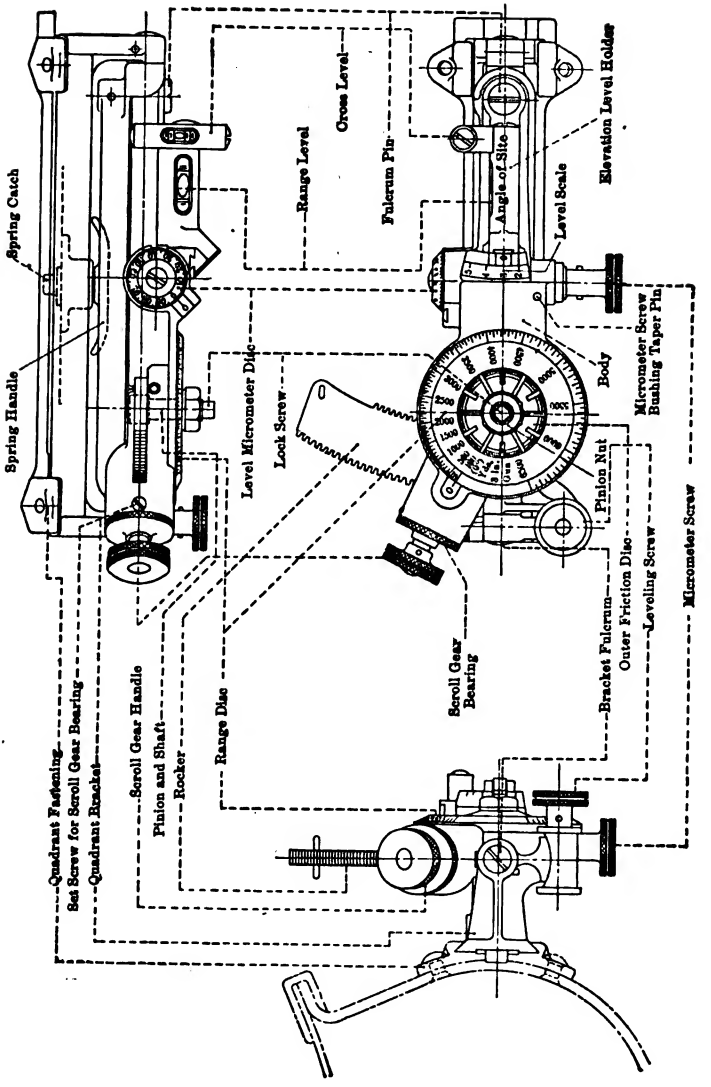

FIG. 259.

Digitized by Google

part; and a movable arm, in front of the fixed arm in the figure, carrying a range disk, a range level, and the mechanism for elevating the movable arm. The fixed arm has at the rear an upwardly extending arc, called the rocker, with toothed racks on front and rear edges. The movable arm, pivoted at the front to the fixed arm, is given motion about its pivot by a gear actuated by the elevating hand wheel and meshing in the rearmost rack. A pinion on the shaft of the range disk meshes in the forward rack, and the movement of the arm in elevation is indicated by the scale on the range disk in terms of the corresponding range.

The Range Level.—This is a form of clinometer especially adapted for this purpose. It is pivoted on the axis of the movable arm and may be moved relatively to the arm by a micrometer screw, the upper end of which carries a micrometer scale. A short circular scale is marked on the left edge of the piece carrying the level. The level scale is in 64ths of a circle, and the micrometer scale in 6400ths, similar to the scales of the panoramic sight.

The purpose of the level is to make correction for difference in level of the gun and target. The angle subtended at the target by the difference in level is called the angle of site, as may be seen by the words on the range level in the figure.

The readings on the level scale are 2, 3, 4 and 5, read 200, 300, 400 and 500, to which are added the readings of the micrometer disk scale. No. 300 corresponds to the horizontal position of the axis of the gun.

The readings correspond with those of the vertical scale of the battery commander's telescope to be described. The angle of position expressed in mils is obtained by subtracting 300 from the reading of the scales. If the result is positive the target is above the gun.

Use of the Quadrant.—The quadrant is used as follows: The angle of site or position having been determined by the battery commander's telescope and the range, by a range finder or by estimation, the angle of site is set off on the level scales, the range on the range disks and the gun elevated or depressed so as to center the bubble of the range level.

Digitized by Google

The angle of site of any designated target may, if the target is visible from the gun, be measured by sighting directly on the target with the sight set at any range; then by setting the quadrant range disk at the same range, turning the level screw so as to center the bubble and taking the reading of the level scales.

It will be noted that in the use of the level in correcting the angle of elevation by adding or subtracting the angle of site we are applying the principle of the rigidity of the trajectory. No range quadrant is provided for howitzers, the range setting in indirect laying being by the tangent sight, the level of which is adjustable as in the range quadrant of the guns, for angle of site.

Comparison with the Independent Line of Sight.—While the use of the range quadrant with the 3-in. and larger field guns separates the duties of the cannoneers in aiming, it does not comply with the condition for the independent line of sight described in Art. 320.

The sight and the range quadrant, being attached to the cradle, both move in elevation with the gun. The independent line of sight requires that the gun can be moved and set in elevation with the means provided, without any change in the position of the sight used for aiming in direction.

325. Aiming Seacoast Guns.—Seacoast guns being mounted on level platforms, no provision need be made in their sights for inclination of the trunnions. Furthermore, since any gun is at a fixed level with respect to the sea (except for change of tide which is easily corrected for), the angle of site for a given range is known without special determination. It is therefore easy to lay seacoast guns in elevation by means of a range drum or slide, geared to the gun, and made to move past a fixed pointer.

The tendency is toward this indirect method of laying all seacoast guns in elevation, though in some of the smaller and older ones, the direct method of laying is still used.

Seacoast guns are all laid in direction by direct aiming through the sights, and for this purpose telescopic sights are provided. Since the target is always visible there is no necessity for the

Digitized by Google

panoramic feature of the telescopic sight for mobile artillery guns and it is not used.

Telescopic sights have displaced open sights for all guns on account of the increase in power of vision and decrease in personal error which they make possible. A telescopic sight enables a gunner to see clearly an object which is indistinct to the naked eye, and to lay a gun on it with facility and accuracy.

Some of the forms of telescopic sights used in the service will now be described.

326. Telescopic Sight, Model 1898.—The telescopic sight, model 1898, illustrated in Fig. 260, is provided for the 8-, 10- and 12-inch barbette carriages and for disappearing carriages of the earlier models. A seat for the sight is attached to the chassis. When mounted in this seat the sight is used to give to the gun direction in azimuth only.

A seat is also provided on the trunnion of the gun, and in this seat the sight may be used in giving both elevation and direction. The bracket *b*, Fig. 260, is screwed to the trunnion. The telescope is mounted in a frame whose trunnions *t* rest in notches in the bracket. The frame and telescope are leveled transversely by the screw *l* which bears against a lug projecting from the trunnion shaft of the frame.

Erecting Prisms.—To rectify the image of the object there is mounted in the telescope between the objective and the eyepiece a Hastings-Brashear compound erecting prism, Fig. 261. The compound prism is composed of two prisms, *a*, whose angles are 30, 60 and 90°, laid with their 30° angles toward each other on a parallel-sided glass plate *b*. On the other side of the plate is fixed a gabled prism *c* with a 90° angle. The upper prisms rectify the image vertically, and the lower prism horizontally, as may be seen by following the course of the ray of light shown in the figure.

The telescope is pivoted at its forward end to the frame and is given movement in elevation by the screw *e*, Fig. 260. The elevation scale is read to one minute by a micrometer scale under the screw head.

Digitized by Google

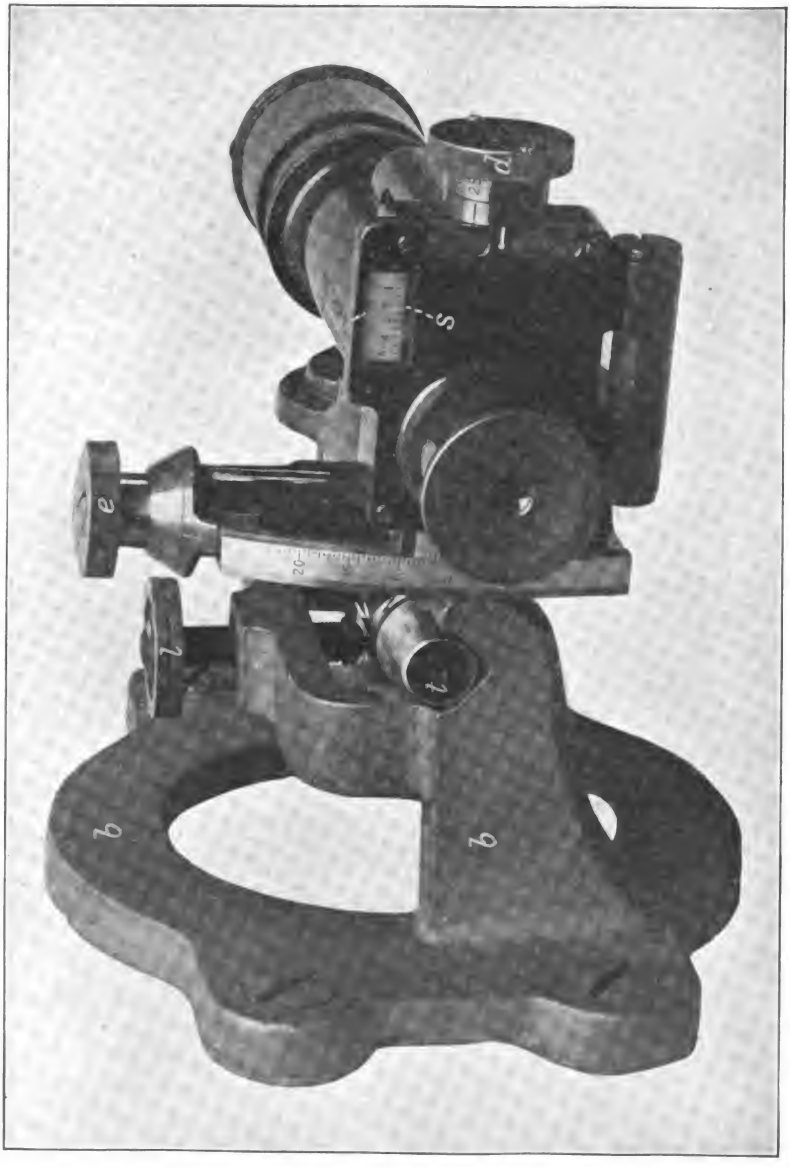

FIG. 260.—Telescopic Sight, Model 1898.

Digitized by Google

Deflection is given by moving the vertical cross wire in the telescope to the right or left by means of the deflection screw *d*, and then moving the gun until the intersection of the vertical and horizontal cross wires covers the point aimed at.

There are two deflection scales, one inside the telescope and one outside. The inside scale, of horn, is in the focal plane of the telescope and is seen at the same time with the object viewed. The scale is graduated in divisions of 3 minutes, and the degrees are numbered from 1 on the right to 5 on the left as in the model

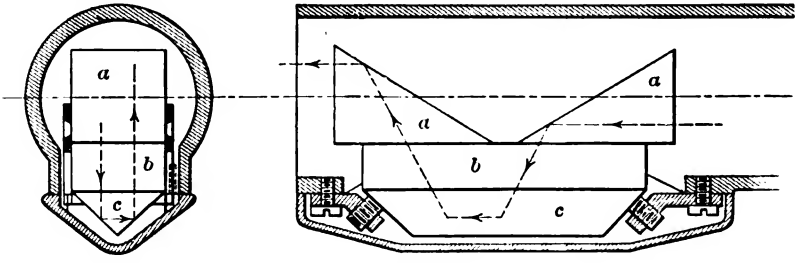

FIG. 261.

1904 telescopic sight. The cross wires in the telescope appear in front of the scale. The vertical cross wire is attached to a sliding diaphragm which is actuated by the deflection screw *d* and moves the vertical wire to any desired degree of deflection to the right or left.

In sighting, the intersection of the cross wires is brought in line with the object sighted.

The outside deflection scale, *s*, Fig. 260, corresponds in movement with the scale inside the telescope. Both scales are read to 3 minutes by the graduation on the micrometer head *d*.

In a telescopic sight the cross wires inside the telescope form virtually the front sight, and the aperture of the eyepiece forms the rear sight. With the telescope just described deflection is given by moving the vertical cross wire to the right or left, and this movement is equivalent to moving the front sight to the right or left. We have seen that with the front sight fixed the

Digitized by Google

projectile follows the movement of the rear sight. When the rear sight is fixed a movement of the front sight is equivalent to a movement of the rear sight in the opposite direction. Therefore, with the telescopic sight, model 1898, the projectile will be moved to the right by movement of the vertical cross wire to the left, and to the left by movement of the vertical wire to the right.

This sight is being replaced by one similar to the later models to be described.

327. Telescopic Sight, Model of 1904.—This sight is used for many of the guns mounted on disappearing carriages.

A general view of the sight is shown in Fig. 262. As originally applied to disappearing carriages the sight arm *a* was pivoted at its forward end and so connected as to make it follow the gun in elevation.

As now applied to these carriages the sight arm is firmly fixed in its bracket on the sight standard.

A cradle *c* carrying the telescope *t* is pivoted to the forward end of the sight arm in such a manner that the cradle has both vertical and horizontal movement about its pivot. Vertical movement is given by the hand wheel *e* which actuates a gear mounted on the sight arm and meshing in the rack on the shank *s*. The cradle is given horizontal movement on the head of the shank by the deflection screw *d*. A deflection scale on the rear end of the cradle under the telescope extends over 4° of arc. The degree marks are numbered from 1 on the right to 5 on the left, the 3° mark corresponding to no deflection. The least reading of the deflection scale is .05°.

The sight is used on disappearing carriages for aiming in direction only. No elevation scales are therefore provided on the sight shank *s*, and only sufficient movement is given the cradle in elevation to enable the sight to be kept on the target at varying ranges and heights of tide.

When used on barbette carriages the sight arm is somewhat different in shape and is bolted to the cradle. It therefore moves with the gun in elevation. For these carriages the rear face of the

Digitized by Google

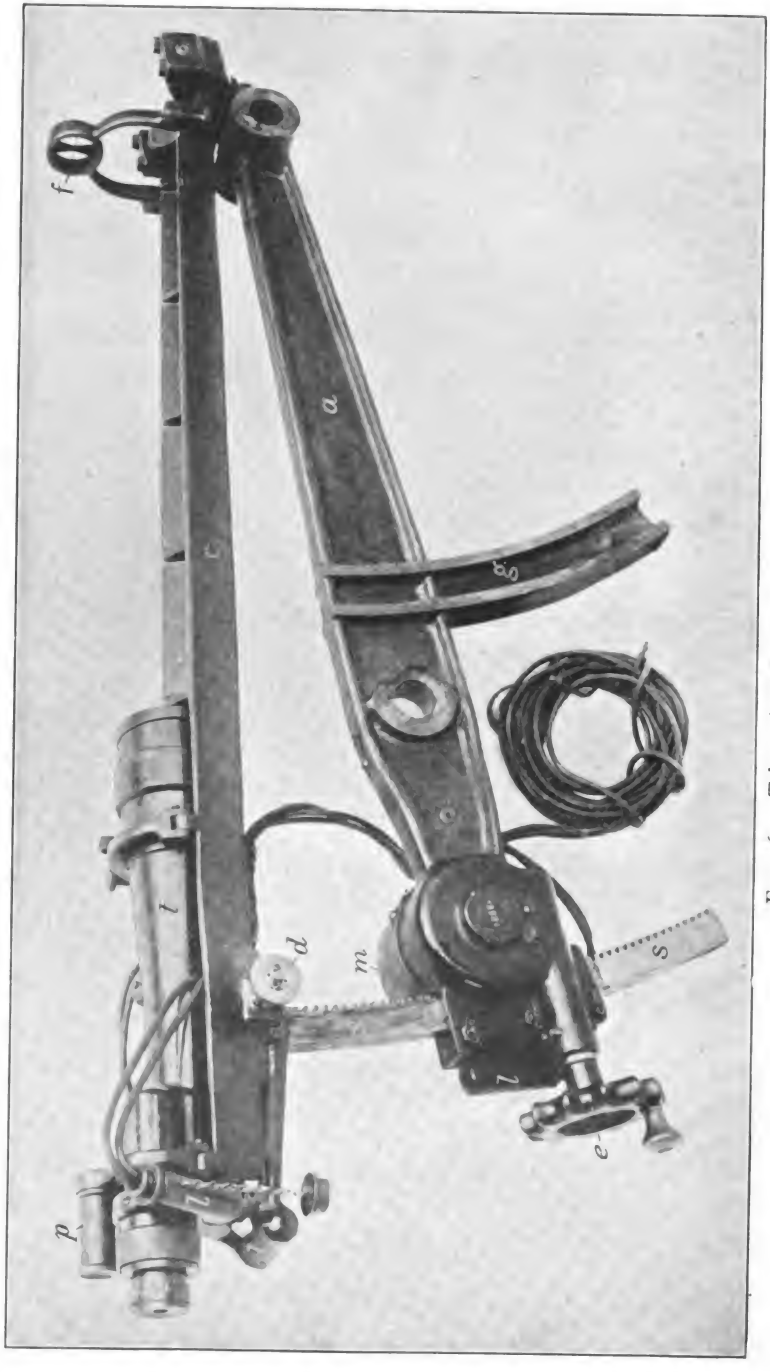

FIG. 262.—Telescopic Sight, Model 1904.

Digitized by Google

shank *s* carries an elevation scale graduated to degrees and minutes of arc, the least reading being 6 minutes.

When the sight is set at the zero of the elevation and deflection scales the axis of the telescope is parallel to the axis of the piece.

A range drum *m* connected with the elevating gear of the sight indicates the range corresponding to any position of the sight. The range drum contains a coiled ribbon spring arranged to equalize the efforts in elevating and depressing the sight.

A peep sight *p* is mounted above the eye end of the telescope, and an open front sight *f*, with crossed wires, is mounted above the forward end of the cradle.

The Telescope.—The construction of the telescope will be understood from Fig. 263. The achromatic object glass *o*, composed of three lenses, has a clear aperture 3 ins. in diameter and a

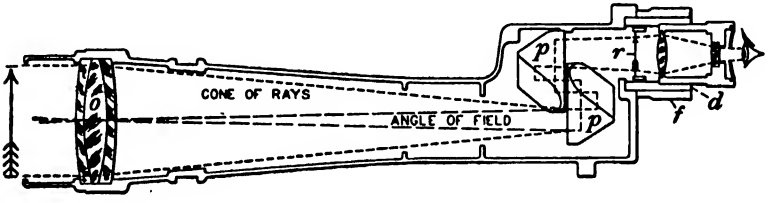

FIG. 263.

focal length of 17.25 ins. The length of the telescope is diminished and an erect image presented to the eyepiece by means of the two Porro prisms *p*. In the figure the prisms appear to be so placed that each intercepts a ray of light entering or issuing from the other, but in reality the prisms are offset from each other so that the light has unobstructed passage to and from them. One prism is horizontal and the other stands vertically. The lower prism by its inclined surfaces bends the ray twice through angles of 90°, reflecting it back to the upper prism, which again bends it twice and reflects it into the field of the eyepiece. The image, rectified horizontally and vertically by the prisms, is focussed in a plane marked by horizontal and vertical cross wires *r* carried in a ring, and is magnified by the two lenses of the eyepiece. The ring carrying the cross

Digitized by Google

wires is mounted in a tube *d* called the draw tube which may be given movement in and out by rotation of the focussing ring *f*. The eyepiece has a screw motion out and in.

Two different eyepieces are provided with the telescope, their magnifying powers being 12 and 20 diameters respectively. The field of view of the telescope with the 12-power eyepiece is 3.6° and with the 20-power eyepiece 2.6°.

In the use of the instrument the eyepiece is first adjusted until the cross wires are distinctly defined. The cross wires are then brought into the focal plane of the objective by turning the focussing ring until the object viewed is also distinctly defined and does not appear to move when the eye is shifted from side to side. An objective once focussed is correct for all observers, but the eyepiece requires focussing for each individual.

Small electric lamps of about 2 candle power, *l* Fig. 262, illuminate, in night sighting, the cross wires at *r* and the deflection scales in the vicinity of the indexes. The lamp that illuminates the cross wires is attached outside the draw tube and its light is reflected by two mirrors through two slits cut through the tube at right angles to each other. The light from each mirror is thrown upon the full length of a cross wire, and the wires appear as bright lines in a dark field.

328. Telescopic Sight, Model of 1912.—This sight is specially designed for horizontal aiming only, no elevation scale and just sufficient motion in elevation to keep the target in view being provided. The sight is shown in Fig. 264. The cradle 1, is so mounted as to have motion both horizontally and vertically about its front end. The swiveled spring bolt 2, holds it firmly against the elevating screw 3. The upper end of the elevation screw bears on a flat surface on the under side of the cradle. By turning the screw the necessary motion in elevation to keep the target in view is secured.

Deflection is set off by means of a milled head on the right end of the deflection worm opposite the nut 4. Deflection can be set off from 0° to 6°, the least reading being .05°. The origin of the

Digitized by Google

scale is marked " 3 " so that the maximum deflection obtainable is 3° either side of normal.

The telescope is essentially the same in principle as that for the model of 1904 sight except that it is longer, the focal length being

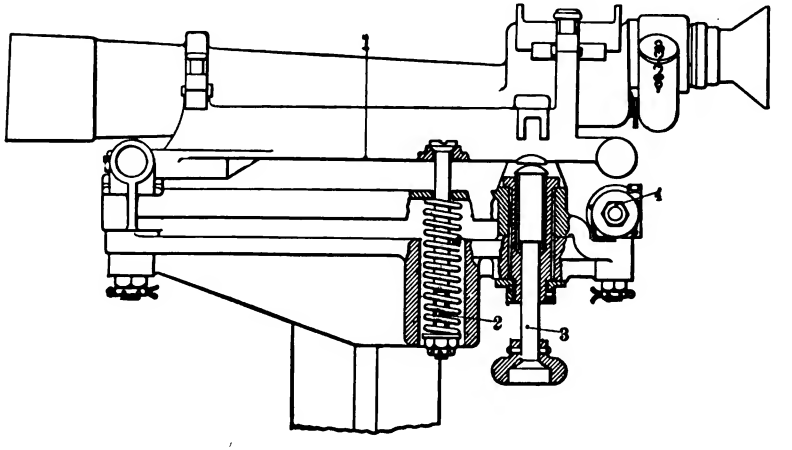

FIG. 264.

24 ins. The eyepiece provided has a magnifying power of 15, making the field of view of the telescope 3° 20′.

Other Telescopic Sights.—The model 1910 sight, quite similar to that just described, is specially adapted to barbette carriages for the larger guns.

For 15 pdr. and other smaller guns a telescopic sight similar to the above but having a telescope with a 2-in. objective is provided.

The Power and Field of View of Telescopes.—The power of a telescope, the ratio of the apparent angle subtended by any object to the actual angle which the object subtends, may be obtained by dividing the aperture of the object lens by the aperture of the eye lens. The telescope of the model 1904 sight has an objective with an aperture of 3 ins. The eye lens of one of the eyepieces provided has an aperture of $\frac{1}{4}$ of an inch. The power of the telescope with the eyepiece is therefore 12. In the telescope of the model 1898

Digitized by Google

sight the aperture of the objective is $1\frac{1}{4}$ ins. and of the eye lens $\frac{1}{6}$ of an inch. The telescope has therefore approximately a power of 8.

The eye receives the maximum amount of light through a telescope when the diameter of the pencil of light emerging from the eyepiece is equal to the diameter of the pupil of the eye. In the normal eye the diameter of the pupil varies approximately from

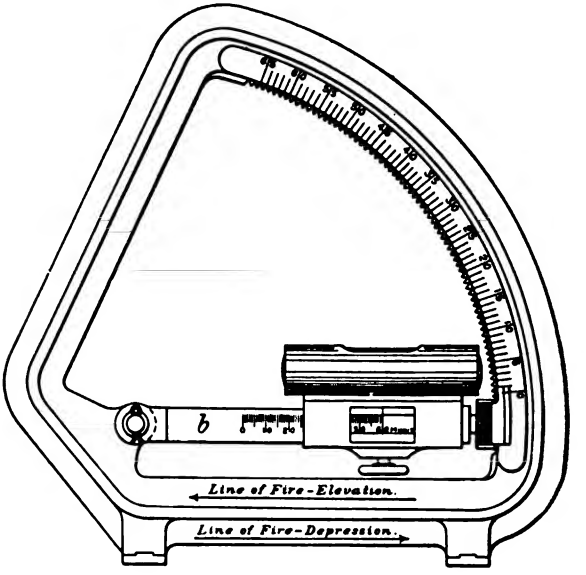

FIG. 265.

$\frac{1}{6}$ of an inch to $\frac{1}{4}$ of an inch, according as there is much light or little.

The field of view of a telescope is equal to the field of the eyepiece divided by the power of the telescope. The telescope of the model 1898 sight has a power of 8 and its eyepiece has a field of 48°. The field of view of the telescope is therefore 6°.

The field of view of the same telescope with different eyepieces varies practically in inverse ratio to the power of the telescope.

329. Aiming Seacoast Mortars.—Seacoast mortars are permanently mounted on level platforms located behind high parapets

Digitized by Google

which prevent direct view of the target. It is therefore necessary to aim seacoast mortars indirectly both in elevation and direction. For this purpose their carriages are provided with graduated azimuth circles by means of which the piece may be laid at any given angle with the meridian plane. The angle made with the meridian plane by the line to the target is determined by means of range and position finders. The piece is then laid at that angle by means of the graduations on the azimuth circle, and correction is made for drift and deviation due to the wind.

The Gunner's Quadrant.—The instrument formerly used for laying seacoast mortars in elevation and still used with mortars not equipped with the special quadrant to be described later, is shown in Fig. 265. It is known as the gunner's quadrant. Arm *b* carries a spirit level and may be set at any desired angle with the base of the instrument up to 65°. The notched scale fixes positions for the arm *b* at whole degrees. Minutes are obtained by sliding the level along the scale on the curved arm *b*. The principle of the sliding level on the curved arm will be readily understood by reference to Fig. 266.

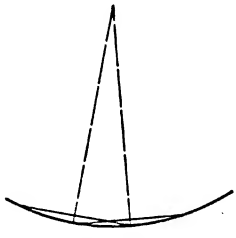

FIG. 266.

The quadrant may be used to measure angles of elevation or of depression from 0 to 65°.

The quadrant, set to any desired angle of elevation, is placed on the gun on a seat prepared for it parallel to the axis of the piece. The instrument is so placed that the proper arrow on its base points in the direction of the line of fire. The piece is then elevated until the bubble of the level is in the middle of the tube.

By placing the instrument on a vertical seat, as for instance the face of the breech or muzzle of a gun, angles greater than 25° from the vertical may be measured. The angle is obtained by subtracting the reading of the quadrant from 90°.

Quadrant for 12-in. Mortar, Model of 1908.—This quadrant, shown in Fig. 267, differs from that just described in that it is per-

Digitized by Google

manently attached to the rim base of the mortar, through the screws in the quadrant bracket 1. The elevating arc formed on this bracket is graduated up to 70°, each tooth corresponding to 1°.

Changes of 1° in the position of the quadrant arm are made by releasing the toothed arm sector 5, and moving it one notch. Smaller

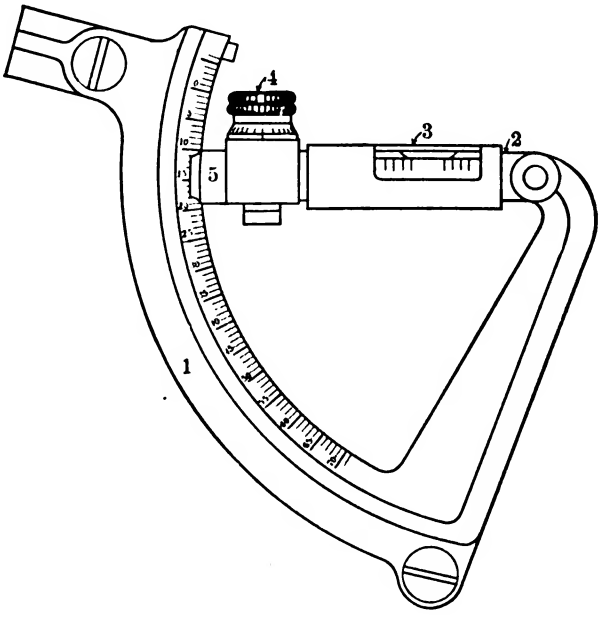

FIG. 267.

changes are not made by sliding the bubble along the quadrant arm, as in the gunner's quadrant, but by turning the micrometer screw 4. This slides the arm sector 5 along a circular guide whose center is the axis of the quadrant arm. The head of the micrometer screw is graduated to minutes.

This form of quadrant has replaced the gunner's quadrant on all mortars.

Digitized by Google

CHAPTER XIII

FIRE CONTROL INSTRUMENTS

330. Definitions.—A range finder is an instrument for determining the horizontal distance or range from a given point to a distant object.

A position finder is an instrument for determining the direction of a distant object from a given point. This direction is measured by the angle made by the line from the given point to the object with some fixed line or plane through the point. This reference line or plane may be, for instance, the meridian plane or the perpendicular to the front of the battery.

An instrument which combines both the functions of range and of position finding is a range and position finder.

Types of Range Finders.—All range finders depend, in principle, on the solution of a triangle when one side and the adjacent angles are known. The base of this triangle may be either horizontal or vertical. The horizontal base instruments are of two types. The long horizontal base requires two instruments, one on either end of an accurately measured base, with two complete sets of observers, readers, etc. The short horizontal base, or self-contained type, requires but one instrument. The base is included in the instrument itself as will be described later.

In determining any fixed range, the effect of an error in the measurement of an angle at the base of the triangle will be a minimum when the angle of intersection of the respective lines of sight at the target is a right angle. This is apparent from Fig. 268. A given range $o\,t$ is less affected by angular error in an angle measured from b than in one measured from a. Since the base will generally be much shorter than the ranges to be measured, it follows that it will generally be best to use as long a base as practicable. From

Digitized by Google

this reason and others which will appear later, long horizontal base installations are more accurate than vertical base installations or self-contained instruments. They are, however, more complex, and suffer from the difficulty of so identifying targets that the operators at either end of the base may quickly bring their instruments to bear on the given target. Nevertheless, the long horizontal base system is the type installed for major caliber guns of position in our service.

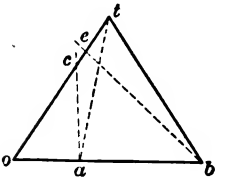

FIG. 268.

From each end of the base simultaneous observations of the azimuth are made at periodic intervals and the range and position of the target with reference to the directing point of the battery is determined by plotting. From the plotted track of the target, prediction is made as to the position it will occupy at a predetermined time in advance and the range and azimuth of this point, corrected for the ballistic conditions, travel of target, etc., are set on the range scale of the guns. The gun is then fired at such a time that the target and projectile should arrive simultaneously at a point selected.

The principle of the vertical base (otherwise known as the depression) range finder is shown by Fig. 269.

The height of the instrument above the sea level is accurately known. The angular depression of the water line of the target is therefore a determinate function of its horizontal range from the observation station. This range is usually given directly in yards on a range drum attached to the instrument. Corrections must be made for the varying height of the instrument above sea level due to changes in tide and for abnormal atmospherical refraction. The instrument must also contain a means for determining the angular position of the target. This is usually obtained by measuring its azimuth clockwise from the south point.

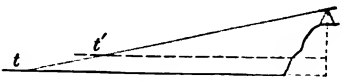

FIG. 269.

The self-contained range finder is not at present used for guns

Digitized by Google

of the major armament. It will be described later in connection with the field artillery range-finding matériel.

331. Swasey Depression Position Finder.- This instrument is

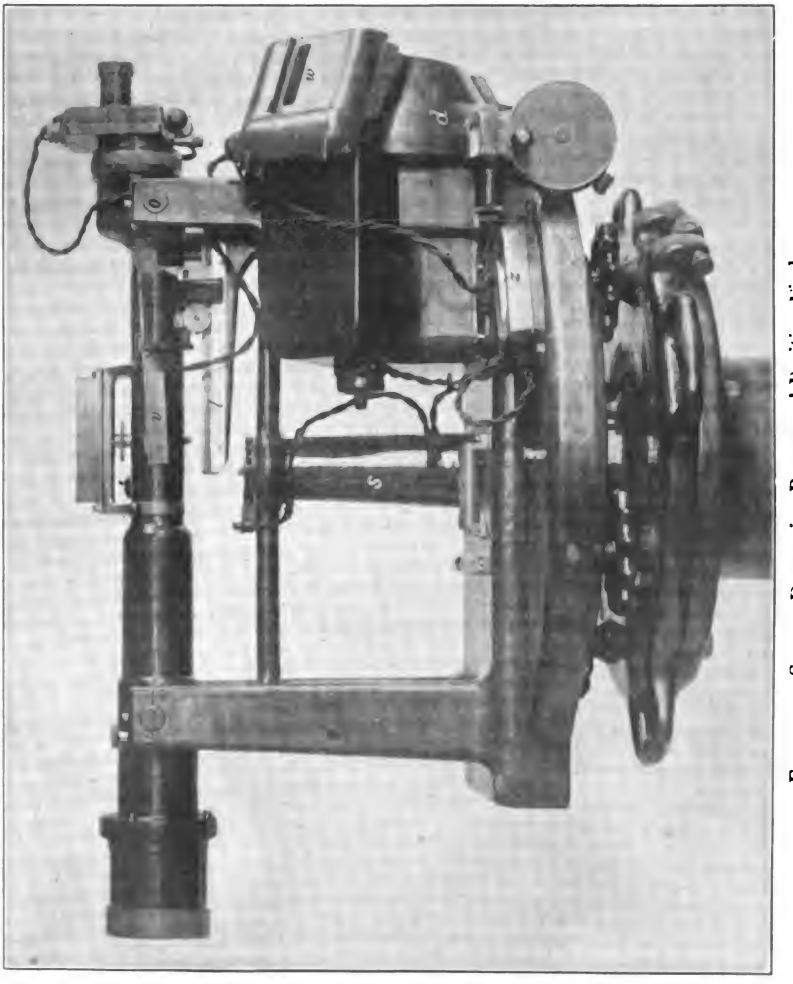

FIG. 270.—Swasey Depression Range and Position Finder.

shown in Fig. 270. The observing telescope contains Porro erecting prisms and is similar to the telescope sight, model of 1912, previously described. It is mounted in a frame which revolves in a

Digitized by Google

central spindle *s*. The telescope is pivoted near its front end and is supported near its rear end by a stud projecting from the carriage *a* which bears on the bar *v*, attached to the telescope. The carriage *a* is mounted on the bent lever *l*. This lever is pivoted at *o* and its lower end engages in a worm on the range drum shaft. When the drum is turned, the motion of the lower end of the lever causes the carriage *a* to be raised or lowered. This in turn causes the telescope to rotate about its horizontal axis through a small angle so that the horizontal cross hair in the telescope will waterline a target at the range indicated by the drum, the instrument being properly adjusted.

The carriage *a* may be moved along the arm *l*, thus changing the relation between the movement of the range drum and the telescope so as to adapt the instrument for varying heights of site.

A scale on *l* is graduated for heights of site of from 40 to 400 ft.

An internal mechanism is provided which automatically corrects for curvature of the earth and normal refraction.

The range is read through the window *w* and the azimuth through *z*.

The instrument may be adjusted on two datum points at known ranges by successive approximations as follows: Set the range drum at the range of the most distant datum point and, if necessary, move the horizontal cross hair by means of the micrometer screw until it waterlines the datum point. Set the range drum at the range of the nearest datum point and, if necessary, bring the cross hair on the waterline by moving the carriage *a*. Repeat these operations until the instrument gives the correct ranges of each of the datum points without the necessity of changing the adjustment.

Lewis Depression Position Finder.—This instrument is extensively used in the service. It differs in details of construction and methods of adjustment from the Swasey instrument, but the principles involved are the same.

Depression position finders are used on sites from 25 to 900 ft. above sea level. The higher the available site the more accurate

Digitized by Google

will be the readings of the instruments. On very low sites towers of strong construction are erected to increase the height.

332. The Plotting Room.—The azimuth of the target from either end of the long horizontal base or the azimuth and range from a vertical base are communicated to the plotting room. In this room are assembled the necessary instruments for reducing the data thus obtained so that finally there is obtained the azimuth and range to the set forward point from the directing point of the battery. The necessary corrections include those for travel of target, wind, drift, atmospheric density, variations in muzzle velocity, etc.

The Plotting Board.—The principle of this is shown in Fig. 271. The distance $P\,S$ represents the base line to scale. The angle

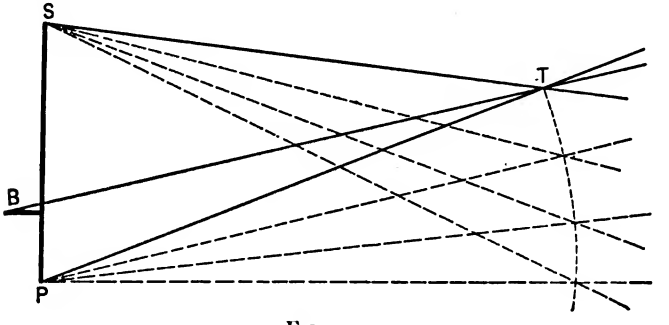

FIG. 271.

measured at the primary station being set off at P and the one measured at the secondary at S, the intersection of the primary and secondary arms T will be the plotted position of the target. In case the vertical base is used, the azimuth is set off on the primary or secondary arm as the case may be and the point T established by means of range scales graduated on these arms. The point B is the position of the directing point of the battery and the range and direction of the target from the battery is determined by bringing the gun arm to the point T.

The dotted lines show directions to successive positions of the target.

The 110 *Plotting-board, Model of* 1915.—This board is shown in

Digitized by Google

Fig. 272. The gun arm *G* is pivoted at *B*, the center of the board. The station arms are pivoted at *P* and *S*, the centers being located to actual scale with reference to *P*, the directing point of the battery. The azimuth circle *A* extends over 110° and consists of four separate scales of 90° each. The points *P* and *S* are located with reference to one of the azimuth quadrants. When it is desired to use another quadrant the station arms are moved to one of the other sets of pivots shown. To permit this there is a pivot for each station at four points separated by 90°.

The station arms are connected to the station indexes *I* by couplers or links *C* equal in length to the distances from *P* to the respective station pivots. This permits the use of the same azimuth scale in laying off readings from the respective stations as is used for the gun arm, pivoted at the center of the azimuth circle.

The board is constructed to a scale of 400 yds. to the inch. The gun arm and station arms are graduated to 20,500 yds. The subscales on the indexes of gun and station arms read to 0.05°.

The gun arm is supported by a bracket *K* and is hinged at *N*, so that it may be lifted over the station arms. This construction is more clearly shown in the small figure to the left.

There are many other types of plotting boards in the service. The one described is the simplest and, on the whole, the most satisfactory.

333. The Pratt Range Board.—This is used for guns of the major and intermediate armament. It is shown in Fig. 273. It consists principally of the box 1, the chart frame 2, the correction chart 3, mounted on the canvas 4, and the correction ruler shown in the middle of the figure.

The chart contains sets of curves which give the corrections at the various ranges due to varying conditions of the atmosphere, variations in the muzzle velocity from the standard, different heights of tide and varying wind velocity. The center straight line of each set of curves is the normal (no correction) curve. The corrections are applied to the actual range of the set-forward point by mechanical addition by means of the correction rule.

Digitized by Google

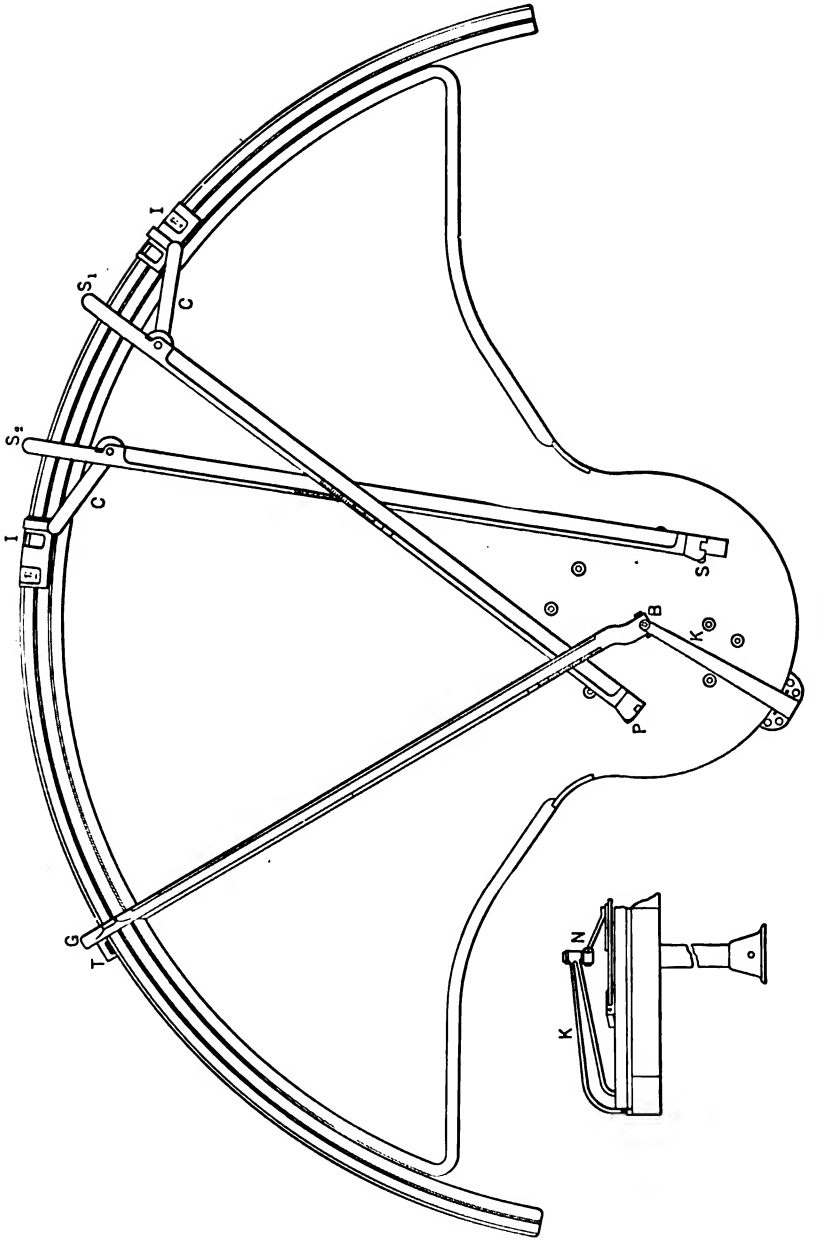

FIG. 272.

Digitized by Google

The correction ruler consists of a lower fixed scale and an upper movable scale. The movable scale is operated by means of the

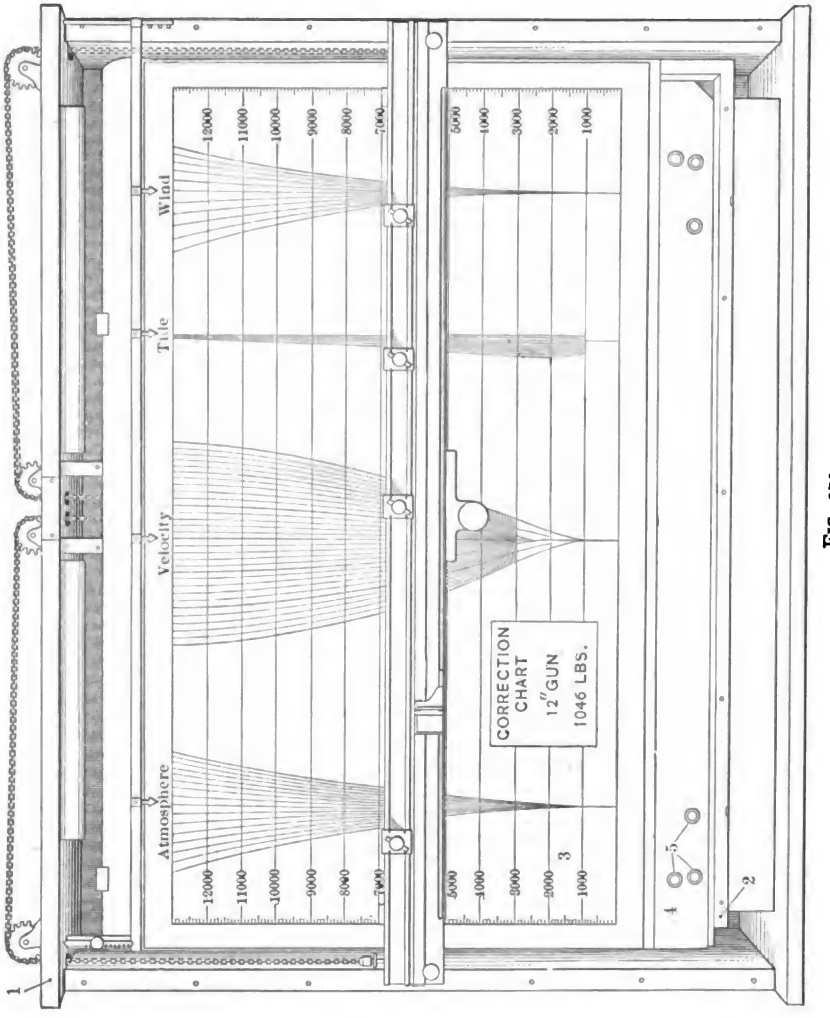

FIG. 273.

knob shown under the fixed scale. Pointers are provided which may be clamped either to the fixed scale, to the movable scale or to both scales simultaneously.

Digitized by Google

With all pointers set at their respective normals and with the two scales set so that corresponding ranges are directly opposite each other, the operation is as follows:

Set the ruler at the actual range of the set-forward point, by means of the vertical scales on both sides of the chart. Set the movable index to the actual range of the set-forward on the fixed scale; clamp each pointer, in succession, to the movable scale and bring it to the correction curve which corresponds to the actual conditions obtaining. This operation shifts the movable scale by the necessary amount to add algebraically the proper corrections to the actual range, so that the range shown by the index on the movable scale opposite to the actual range on the fixed scale, will be the corrected range to the set-forward point. Each pointer is kept clamped to the fixed scale when not being used. If due to a change of range, wind velocity or other cause, any particular pointer no longer points to its proper curve, it is unclamped from the fixed scale, clamped to the movable scale, brought to its proper curve and again clamped to the fixed scale.

The necessary adjustments and tactical use of this board are laid down in Drill Regulations for Coast Artillery.

For guns of the minor armament, a slide-rule range board is provided which mechanically adds an arbitrary correction to the actual range. This correction is determined by the battery commander from observation of fire.

334. The Deflection Board for Guns.—This is a device for obtaining the necessary corrections for travel of target during observing interval and time of flight; for wind and for drift. It is shown in Fig. 274. The total azimuth correction to be applied on the gun arm of the plotting board or the deflection to be set on the deflection scale of the sight is given by this instrument. The principal parts are the base *B*, the platen *A*, which slides on and may be clamped to the rod *C*, the wind arm *F*, the drift scale *H*, the platen scale *I*, the T square *E*, the travel arm *D*, and the scales shown along the lower edge of the board.

The operation is as follows:

Digitized by Google

Set the wind arm to the proper reference number on the scale *G*. The number 50 corresponds to normal or no wind and the edge of the arm would be perpendicular to the base of the board if set at this number.

Move the platen until the range on the drift scale *H* is opposite the working edge of the arm *F*. This gives the correction simultaneously for wind and drift. If the edge of *H* were straight and perpendicular to the edge of the board, correction for wind only would be given. With wind at normal and no drift (zero range) there would be no correction required and the center of the arm *D* would be opposite the normal (3°) of the deflection scale.

Set the right edge of the travel arm *D* to the travel reference number on the platen scale *I*. A right-angled triangle is thereby established of which the vertical side, from the center about which *D* turns to the middle of the scale *I*, corresponds to the observing interval—usually 30 seconds. The horizontal side of this triangle corresponds to the angular travel of the target during this time.

Set the T square so that the point of its scale corresponding to the range will be accurately over the right edge of the travel arm *D*. Although graduated in range, the T square scale really is a scale of time of flight corresponding to the given ranges. Since the right-angled triangle made by the deflection scale, the T square scale and the travel arm is similar to the one previously mentioned, its horizontal side will give the angular travel during time of flight. The deflection opposite the lower end of the T square will therefore be the corrected deflection to be set off on the sights.

To obtain the correction to be applied to the gun arm of the plotting board, when the gun is to be laid by means of its azimuth circle, set the azimuth correction scale so that the reference number corresponding to the angular travel during the observing interval is under the normal of the deflection scale. The correction is then read on the azimuth correction scale opposite the lower end of the T square.

The deflection board for mortars is different in construction

Digitized by Google

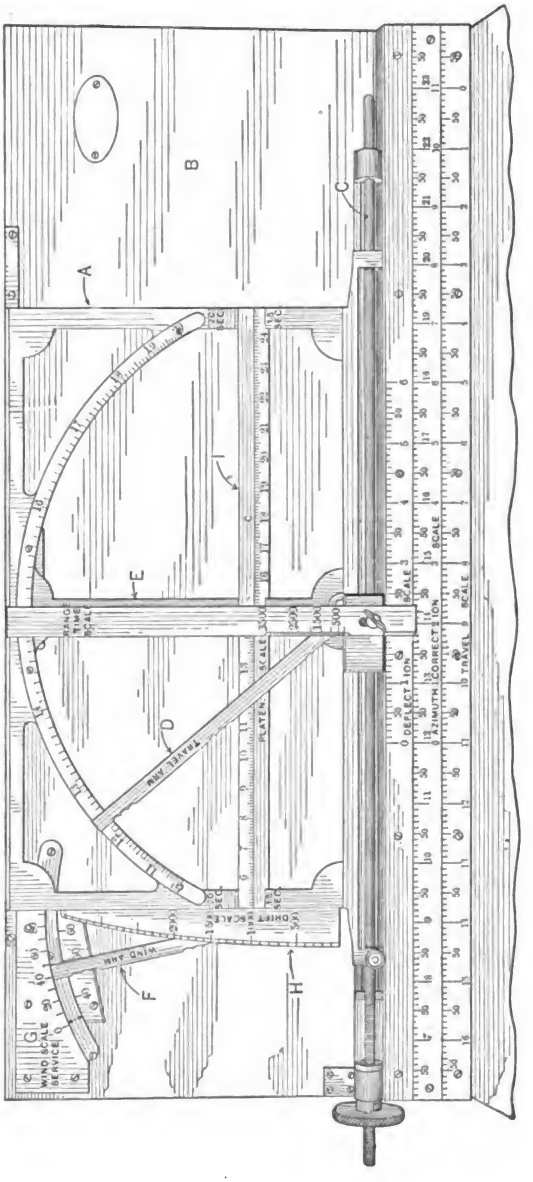

FIG. 274.

Digitized by Google

from that just described. Its construction and operation will be demonstrated from the model.

Miscellaneous Instruments for Fire Control for Artillery of Position.—The following instruments will be described in detail from the models:

The Wind-component Indicator.—This is a device for indicating mechanically the strength of the wind in the direction of, and across the line of fire. The strength of the wind is given by reference number corresponding to those on the range and deflection boards.

The Set-forward Ruler is a device for determining the point (set-forward point) at which it is estimated that the target will arrive at the end of the predicting interval plus the time of flight for the range.

The Prediction Scale is a ruler graduated on both edges both ways from an origin at its middle, to the scale of the plotting board on which it is to be used, for the purpose of determining the probable position of the target at the end of the next observing intervals.

The Predictor.—This is a mechanical device on the principle of the pantograph for the purpose of determining predicting and set-forward points.

The Time-interval Recorder.—This is an ordinary stop watch.

335. Range Finders for Mobile Artillery.—*The Weldon Range Finder.*—The Weldon range finder, Fig. 275, consists of three triangular prisms mounted in a metal frame. The silvered base of each prism rests against the metal. The angle at the apex of each prism is as follows:

The upper or first prism, 90°;
The second prism, 88° 51′ 15″;
The third prism, 74° 53′ 15″.

Now if we construct, as in Fig. 276, the first two of the above angles at the end of a base whose length is unity, and the third angle, as shown in the figure, the sides of the resulting triangles will be of the lengths marked on them in the figure, the sides being proportional to the sides of the opposite angles.

Digitized by Google

Each prism diverts a ray of light through an angle equal to 180 minus the angle at its apex, as may be seen from Fig. 277.

A ray entering the first prism from *t* or *a* issues from the prism in a direction perpendicular to its original direction. And, similarly,

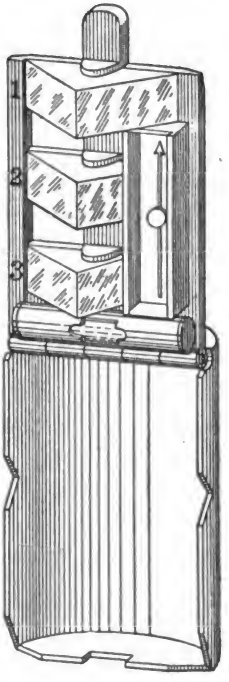

FIG. 275.

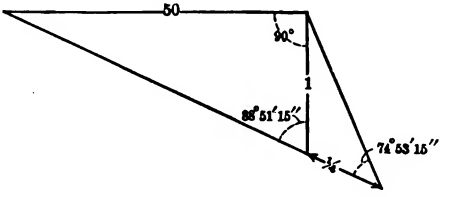

FIG. 276.

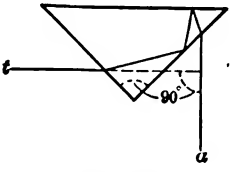

FIG. 277.

a ray will issue from the second prism at an angle of 180 minus 88° 51′ 15″ with its original direction.

Standing at *a*, Fig. 278, and looking into the *first prism*, we see the image of the object *t* in the direction *ad*, perpendicular to *at*, and at the same time looking over the prism we see the object *d* in the line with the image of *t*. Now moving back on the line *da* there will be some point *b* on this line where the target *t*, seen in the *second prism*, will again align with the object *d* seen over the prism. The angle *tba* is then 88° 51′ 15″ and *at*, the range to the target, is 50 times the base *ab*, see Fig. 276.

Digitized by Google

The *second prism* may be used at both ends of the base. The triangle *abt* will then be an isosceles triangle, the angle at *a* being equal to the angle at *b*, and the length of the sides *at* and *bt* will be 25 times the length of the base.

The *third prism* is provided for use when the base *ab* is inconveniently long or when through the interposition of a gulch or other obstacle the length of the base cannot be directly measured.

The points *a* and *b*, Fig. 278, having been determined, the observer moves on the line *tb* to some point *c* from which, looking in the *third prism*, he sees the image of the point *a* covering the object at *t* seen over the prism. The angle at *c* is then 73° 53′ 15″, and as shown in Fig. 276 the base *cb* is one-quarter of the base *ab* or 1/200 of the range *at*.

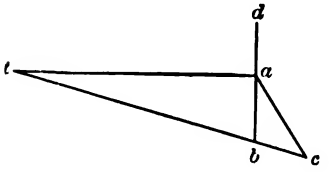

FIG. 278.

It is apparent from Fig. 277 that the instrument may be used with the apex of the prism toward the eye or toward the target, since both *t* and *a* may represent either target or eye. The position of the image in either case with respect to the apex of the prism is indicated in the figure.

The true *refracted* image may always be distinguished from images *reflected* from the face of a prism by revolving the instrument about a vertical axis. Reflected images revolve with the instrument, but as the lateral refraction is a fixed one *the refracted image remains stationary* when the instrument is revolved.

When the instrument is held with the compass needle pointing north, the bottoms of the two notches in the middle of the cover mark the east and west line; and these two notches together with the two at the end of the cover mark diagonal lines running northeast and northwest.

336. The Self-contained Range Finder.—There are several models of this type in service. The general principle is illustrated in Fig. 279. Light from an object *C* is reflected through a right angle by a prism at *A* (shown as a mirror for simplicity). It then passes through the object lens shown, is again reflected through 90°

Digitized by Google

by the prism D and is viewed by the observer at F through the eyepiece shown, the line FD being parallel to AC. Similarly, light from an object at C', after two right-angled reflections is seen by the observer at F, the line FD being parallel to BC'. A prism P is

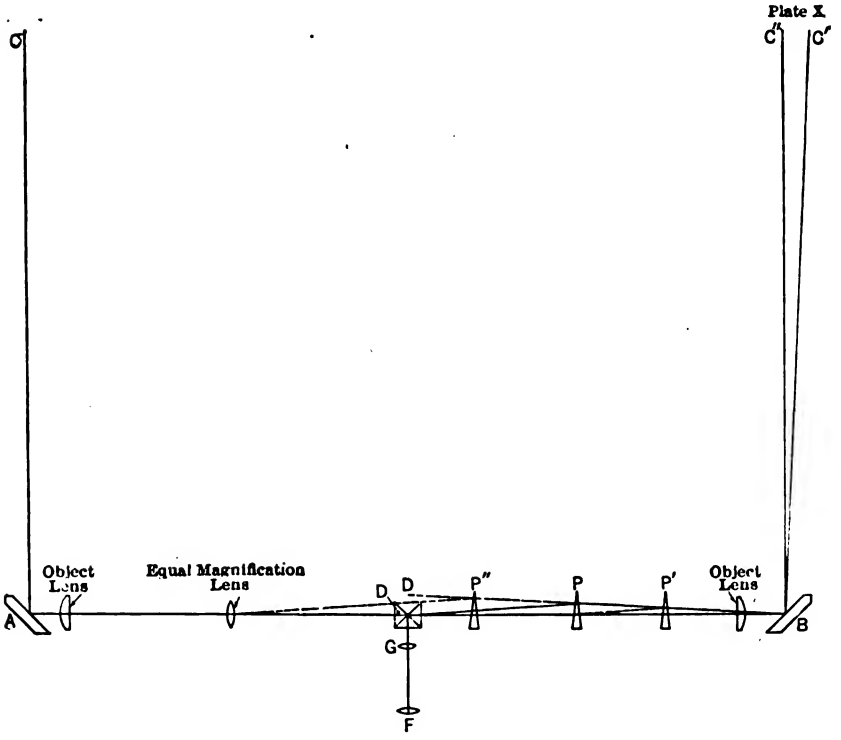

FIG. 279.

placed in the path of the light from C', the path of the light is deviated so that the line BC' does not appear to the observer as parallel to FG. The line BC'', which makes a slight angle with BC', does appear to the observer as being parallel to FD and therefore to AC. The point of intersection of AC and BC' will therefore appear to the observer in the center both of the field of the left objective and that of the right objective. The distance to the point of intersection will depend on the angle $C'BC''$ and the length

Digitized by Google

AB. This length is the "base" of the instrument. By moving the prism *P* along the axis of the instrument, the angle *C'BC''* will be varied and therefore the range to the point of intersection. Since the angle of *P* is small, it requires a considerable movement of the prism to produce a slight change in *C'BC''*. Errors due to mechanical defects, lost motion, etc., are therefore minimized. A range scale or drum is connected with *P* so that the range to the point of intersection may be read directly.

In order to avoid confusion between the two images formed by the two objectives in the single eyepiece, various artifices are employed. In the Bausch & Lomb and the Goerz instruments, one image is inverted and appears above the erect image from the other objective. The two images of the object, the distance to which is sought, are, in these instruments, brought into contact. In the Barr and Stroud instruments, the upper half of one image and the lower half of the other are cut out so that the two fields appear as in Figs. 280 and 281. The two parts of the object, the distance to which is sought, are brought into their proper relation, as shown by Fig. 280, and the range read on the scale.

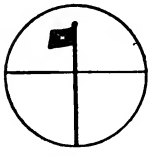

FIG. 280,

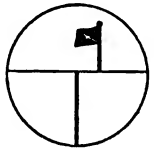

FIG. 281.

337. The Battery Commander's Telescope, Model of 1915.— This is a binocular observation instrument of the scissors type—so-called from the action of the tubes.

The instrument is shown in Fig. 282. It is mounted on a tripod with provision made for leveling.

When the tubes are in the closed position the objectives are 12 ins. above the eyepieces, enabling the observer to remain under cover behind a shield or parapet, and yet obtain a full view of the field. When the tubes are in the open position the distance between objectives is about 26 ins. This separation of objectives gives greater definition to objects in the field of view and enables the observer to be concealed behind a tree or other such object.

Digitized by Google

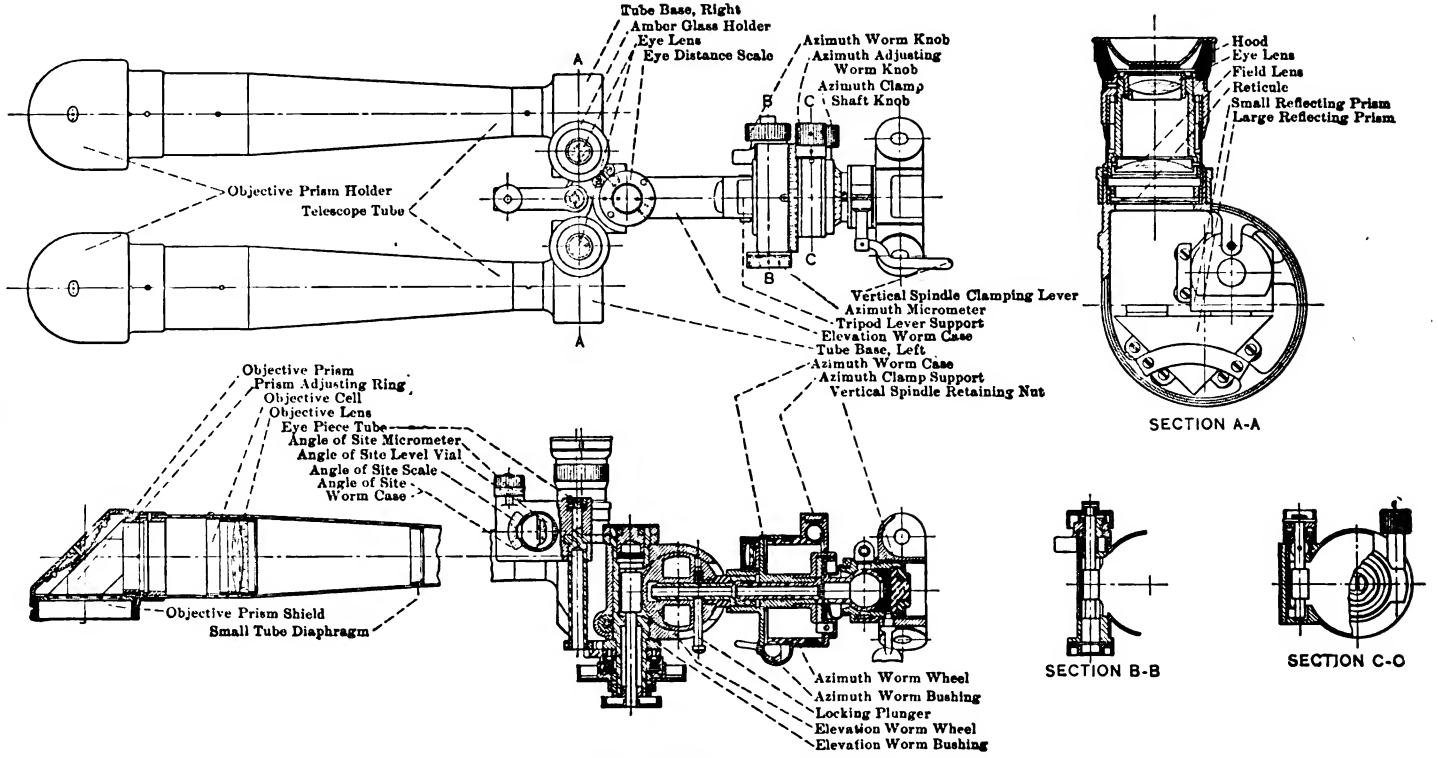

BATTERY COMMANDER'S TELESCOPE
MODEL OF 1915

FIG. 282.

Digitized by Google

Optical System.—This consists of the objective prism, objective lens, small reflecting prism, large reflecting prism, field lens and eye lens. The reflecting prisms change the direction of the rays in passing from the telescope tube to the eyepiece. The field of view of the telescope is 4 15′ and its power is 10.

Scales.—The instrument is provided with an azimuth scale for

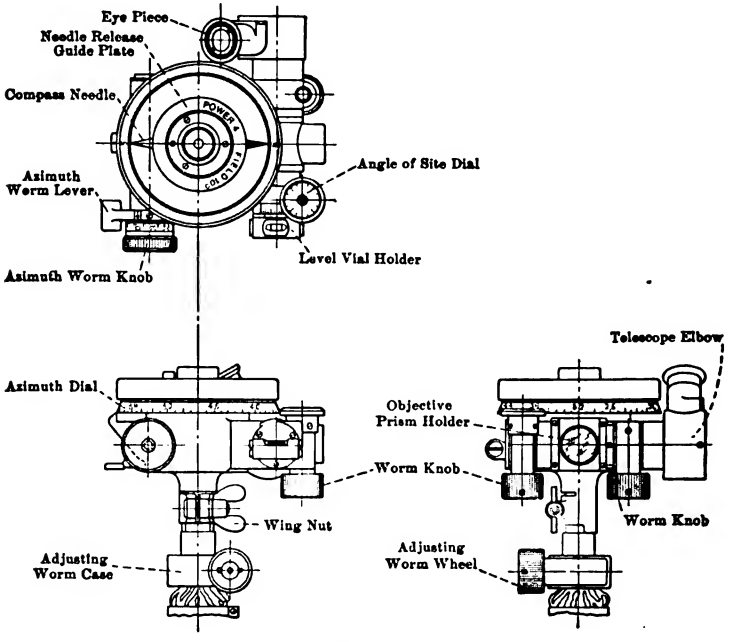

FIG. 283.

measuring horizontal angles, graduated, like the panoramic sight, in mils.

The angle of site level can be set, by means of a scale graduated in mils, to the angle of site.

The movement of the telescope on the vertical limb is from 300 mils elevation to 300 mils depression.

The battery commander's telescope is used for measuring both horizontal and vertical angles; horizontally, the azimuths between

Digitized by Google

the target, gun, and aiming point, the azimuth of the front of a hostile position, the correction in azimuth required to bring the shots from a battery on to the target; and vertically, the angle of position of the target, the correction in elevation required to bring the projectile to the target or the burst of the shrapnel to the proper height above the target.

The battery commander's telescope is an excellent instrument for use in observation of the effects of fire and has superseded special telescopes formerly used for this purpose.

In earlier models of battery commander's telescopes a single telescope was used. These instruments were less efficient for observation purposes.

The Aiming Circle, Model of 1916.—The aiming circle is shown in Fig. 283. It is an angle-measuring instrument consisting of a telescope, angle of sight device, azimuth circle and compass, mounted on a tripod. Like the battery commander's telescope, it is used for measuring horizontal and vertical angles. The purpose in its design was to secure a lighter and cheaper instrument for the work.

The field of view of the telescope is 10 and the magnifying power is 4. The telescope is too low in power for efficient use for observation.

The scales on the instrument correspond with those on the battery commander's telescope and the panoramic sight

The compass is useful in determining locations from maps.

338. The Battery Commander's Ruler.—This instrument is a wooden rule 6.7 ins. long, containing four scales.

The scales at the edges are graduated from 0 to 300 mils for every 2 mils. One of the middle scales is a range scale, graduated for each 200 yards, and the other a trajectory, or angle of departure scale, graduated from 0 to 710 mils for each 5 mils.

A cord 24 ins. long is attached to the ruler through a hole in the center. When the end of the cord is fastened to the top button of the coat the ruler may be held 20 ins. from the eye, and this permits horizontal or vertical angles to be quickly measured by using the scales on the edges.

Digitized by Google

Practical use of the middle scales is made in determining whether it is possible to fire from a given position over intervening obstacles at a given target. The angle of site of the target, the height (or angle of site) of the obstacle in mils and the ranges of target and obstacle in yards being given, the height of trajectory in mils at the obstacle is determined for the given range as follows:

Read off on the height of trajectory scale the number of mils opposite the range of the target. Subtract from it the number of mils read on the trajectory scale opposite the range of the obstacle. This will give the height of trajectory at the obstacle at 0° angle of site. Then add or subtract the angle of site of the target according as the target is above or below the horizontal. If the resulting

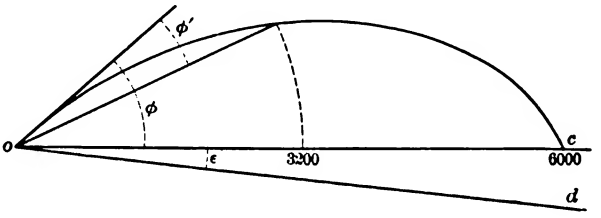

FIG. 284.

height of trajectory is greater than the height of the obstacle in mils, the projectile will clear.

The principle involved in the use of the middle scales will be understood from Fig. 284, in which the 6000-yard trajectory of the 3-in. field gun is represented. The angular heights of the successive points of the trajectory, measured from the origin, evidently diminish from the angle of departure ϕ at the origin to zero at the end of the range. Under the principle of the rigidity of the trajectory we may assume with sufficient exactness that within the limits of direct fire any portion of the trajectory from the origin is the true trajectory for the range represented by its chord. We may therefore assume the portion of the trajectory subtended by the shorter cord in the figure as the true trajectory for the range 3200 yards, and from the figure we see that the angular height

Digitized by Google

of the 6000-yard trajectory at 3200 yards is the angle of departure ϕ for 6000 yards minus the angle of departure ϕ' for 3200 yards.

If the target is below the horizontal by the angle of site ϵ, as shown in the figure, we must evidently subtract this angle from the angular height of the trajectory at the obstacle as determined above, and the reverse if the target is above the horizontal.

339. The Field Artillery Plotter, Model 1907.—The azimuths and the distances of the aiming point, target, and gun from the observation station being known the field artillery plotter, model 1907, mechanically indicates the azimuths and ranges of the aiming point and target from the gun.

The field artillery plotter (see Fig. 285) consists essentially of an axis to which a bottom plate supported by three folding legs is secured. To this axis are secured the gun, aiming point, and target arm supports. The aiming point and target arm supports can revolve about a vertical axis but can have no other motion. The gun arm is permitted to slide through the gun-arm support, motion being imparted to it by means of a rack and pinion operated by a pinion knob. The protractor is carried in a seat provided for it, which seat is secured to the gun arm and moves with it. The protractor is graduated in mils corresponding to the panoramic sight. Secured to the protractor is the aiming point arm. Pivoted on the raised central portion of the protractor frame is the target arm. The aiming point and target arms are guided by sliding supports borne on the support arms. Graduations on the aiming point and target arms indicate distances in yards from any point corresponding to the center of the protractor and a graduation on the gun arm indicates the distance in yards from the observation station to any point corresponding to the center of the protractor.

To use the plotter the angle between the aiming point and the gun from the observation station is measured and the reading set off on the protractor scale by revolving the aiming point arm and its support about the axis until the proper graduation is brought opposite the index marked on the protractor frame, the index on

Digitized by Google

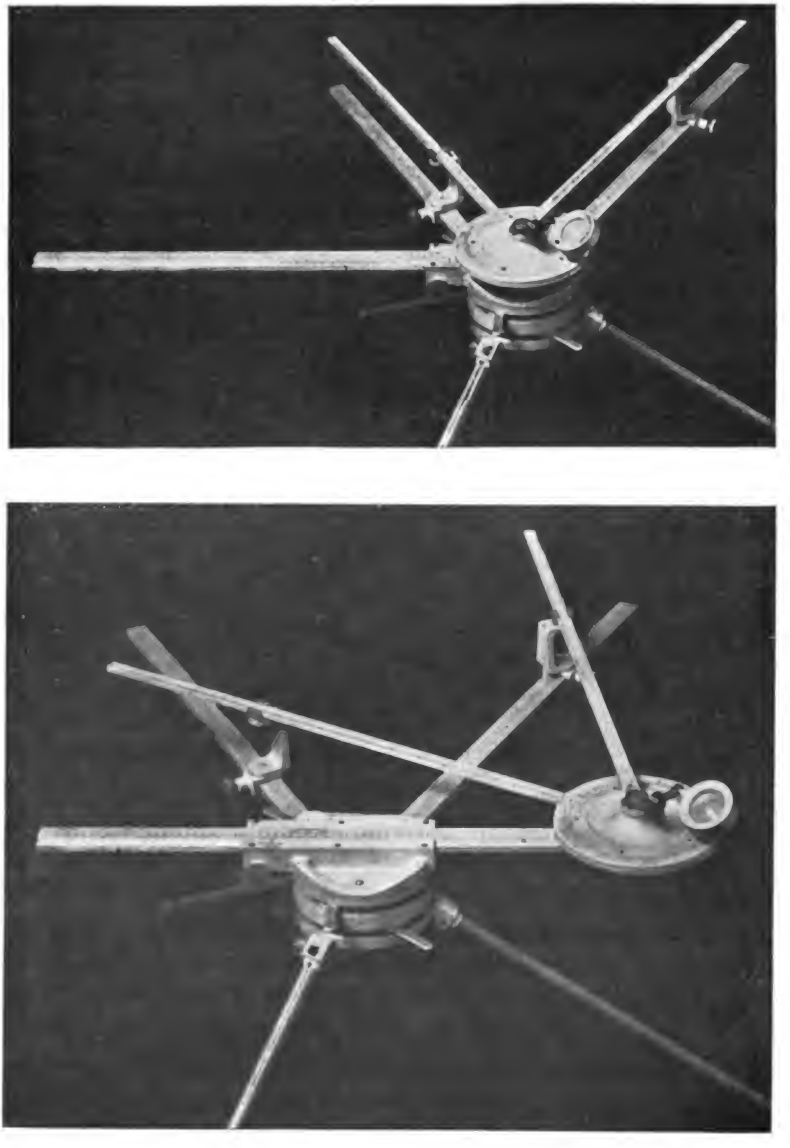

FIG. 285.

Digitized by Google

the gun arm support being first placed opposite the zero of the scale on the gun arm in which position the center of the protractor corresponds to the position of the observation station. Since the azimuth scale of this instrument is secured to the aiming point arm the angle between the aiming point and gun from the observation station must always be set off first. The angle between the aiming point and target is then set off by turning the target arm and its support until the index of the target arm borne on a vernier attached to the arm indicates the correct angle. The ranges to the aiming point and target from the observation station are set off on the aiming point and target arms respectively by moving the sliding supports until their indices are opposite the proper graduations. The sliding supports are then clamped in position on the support arms by means of set screws.

To obtain the data for the first gun the gun arm is moved by means of the rack and pinion until the distance between the gun and the observation station is set off on the gun arm when the position of the center of the protractor will correspond to the positions of the first gun, while the aiming point and target arms will still pass through the sliding supports whose positions correspond to the positions of the aiming point and target, respectively. The deflection for the first gun is read from the protractor scale opposite the index of the target arm and the range is read from the scale on the target arm opposite the index on the sliding support.

340. The Parallax Table.—The field artillery plotter gives the date for the setting in azimuth of the panoramic sight of the directing gun of the battery. To get the data for the other guns use is made of the parallax table. By parallax is meant here the angle in mils, subtended by the front of a platoon 20 yds. from any point outside the battery. Thus in Fig. 286, a being the aiming point and t the target, the parallax of the aiming point is

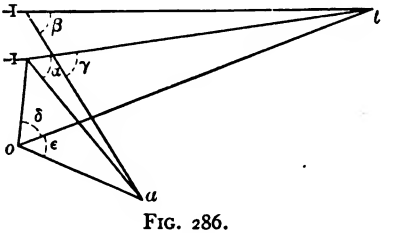

FIG. 286.

Digitized by Google

the angle at a subtended by the two guns, and the parallax of the target is the angle at t subtended by the guns.

The parallax of a point that lies in a direction normal to the front of the battery is, since 1 mil is 1/1000 of the range, equal to 20 divided by the number of thousands of yards in the range. Thus, for 4000 yards the parallax is 5 mils. If the point lies in a direction oblique to the front of the battery, the parallax is equal to the normal parallax multiplied by the cosine of the angle which the direction of the point makes with the normal to the battery front.

The parallax has been calculated for different ranges and different directions of the target and is shown in the following table.

PARALLAX TABLE.

Obliquity Front, Hds. of mils.	....	0	1	2	3	4	5	6	7	8	9	10	11	12	13	14	15	16
	....	0	63	62	61	60	59	58	57	56	55	54	53	52	51	50	49	48
Range Yards.....	1000	20	20	20	19	18	18	17	15	14	13	11	9	8	6	4	2	0
	1250	16	16	16	15	15	14	13	12	11	10	9	8	6	4	3	1	0
	1500	13	13	13	13	12	12	11	10	9	8	7	6	5	4	3	1	0
	1750	11	11	11	11	11	10	9	9	8	7	6	5	4	3	2	1	0
Obliquity Rear, Hds. of mils..	....	32	31	30	29	28	27	26	25	24	23	22	21	20	19	18	17	16
	....	32	33	34	35	36	37	38	39	40	41	42	43	44	45	46	47	48

Parallax Mils.

The upper two lines of the table give the angles of obliquity in hundreds of mils in the two quadrants in front of the battery; the lower two lines give similar angles for the two quadrants in rear. The parallax of any point at any one of the four ranges marked at the left is found in the line of the range and in the column that indicates, to the nearest hundred mils, the obliquity of the point's direction. The parallax in any fixed direction is an inverse function of the range, therefore for any range not given in the table it may be readily determined by means of the parallax for some range in the table. Thus the parallax for 3000 yards is half that for 1500 yards or $\frac{1}{3}$ that for 1000 yards.

By means of the parallax the proper setting of the sight in indirect firing may be determined for one gun from the sighting of the

Digitized by Google

adjacent gun. Thus, in Fig. 286, if the gun on the right has found the target, at the angle α from the aiming point, the angle β for the second gun is readily obtained. Representing by p_a and p_t the parallax angles at a and t, respectively, we see from the figure that, since

$$\gamma = \alpha + p_a = \beta + p_t$$

$$\beta = \alpha + p_a - p_t.$$

The Musketry Rule.—This instrument is a combination of mil scale and device for range corrections and for sight settings for infantry fire with auxiliary aiming points. The scales are so proportioned that the rule is to be held at a distance of 15 ins. from the eye, being thus held by a knotted cord.

Referring to Fig. 287, the scale in the center is an inverted rear sight leaf provided with two sliders. One slider is set at the true range and held on the target, while the other is moved till it intercepts the line of sight to the aiming point. The second slider marks the range to be set off on the rifle.

Similarly, when the impacts can be observed, the rule can be used in conjunction with an estimate in correcting ranging fire so as to get on the target.

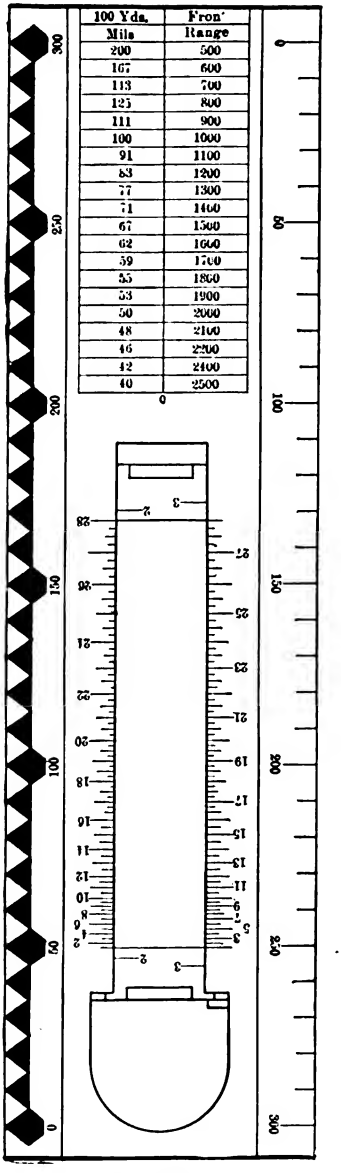

FIG. 287.

Digitized by Google

A table near the end of the rule gives the angles in mils subtended by a front of 1000 yards at ranges varying from 500 to 2500 yards.

The scales on either edge of the rule are mil scales. They are used for target and sector designation, and in estimating ranges and occupied fronts.

Digitized by Google

CHAPTER XIV

SMALL ARMS AND HAND ARMS

341. Service Small Arms.—The small arms used in the service are the .30 caliber rifle model of 1903 and the .45 caliber pistol model of 1911.

Military Rifles.—There are many features common to all military rifles. They are all bolt-action guns, that action having been proved to be the most satisfactory for military purposes. They are all magazine guns, and in nearly all the magazine is loaded in clips of five cartridges. The French Lebel rifle forms an exception to the general method of loading the magazine. In that rifle the cartridges are placed end to end in a tubular magazine underneath the barrel, and it is necessary to place the cartridges in the magazine one at a time.

The calibers of nearly all military rifles do not differ much from that of ours—.30 caliber.

Most military rifles are provided with a knife bayonet, the principal exception being again the Lebel rifle, which has a bayonet of square-ribbed cross-section.

Flat Trajectories.—The recent tendency has been toward reduction of weight of bullet and consequent increase of muzzle velocity. This tends toward flatness of trajectory, greater danger spaces and greater accuracy. Our bullet, which was formerly 220 grains with a muzzle velocity of 2200 ft. per sec., is now 150 grains with a muzzle velocity of 2700 ft. per. sec. Attempts are being made with improved powders to secure a muzzle velocity of 2900 ft. per sec.

The trajectory was made still flatter by the use of the sharp-pointed bullet instead of the round-nosed bullet formerly used.

The reduced weight of the bullet and of the charge of powder reduces the weight of the cartridge, thereby enabling the soldier to carry a greater number of cartridges on his person.

Digitized by Google

The Jacketed Bullet.—In order that the metal of the bullet shall not be stripped by the rifling as the bullet passes with high velocity through the bore, it is necessary to cover the soft lead of the bullet with a jacket of tougher material. The modern bullet is therefore composed of a lead core enclosed in a jacket made of cupronickel or of nickeled steel. The lead gives weight to the bullet and increases its sectional density, while the tougher jacket enables the bullet to take the rifling without material deformation, and also gives to the bullet greater penetration in any resisting material.

The Magazine.—Ease and rapidity of fire are greatly increased by the use of the magazine. At the first introduction of magazine guns the cartridges in the magazine were considered as in reserve, to be used only in cases of emergency. The gun was habitually used as a single loader. In the latest weapons the filling of the magazine may be accomplished more readily than the insertion of a single cartridge into the barrel, since the cartridges are carried by the soldier in packets adapted to magazine loading only. Magazine fire is therefore used habitually, though the guns are adapted for single loading as well.

The mechanism of the magazine is usually arranged to lock the bolt of the gun open when the magazine is empty, so that in the excitement of battle the soldier may not continue to go through the motions of firing with an unloaded gun.

342. Requirements.—That the military arm may stand the rough usage incident to service in war it is essential that it be strongly constructed. Its mechanisms must be strong, simple, and easily dismantled for repair in the field without the use of tools. The mechanisms must not be seriously affected by a moderate amount of rust or dust.

To lessen the chances of injury to the rifle as few of the parts as possible should project beyond its general outline. This latter consideration forms one of the objections to the attachment to military rifles of telescopic sights and other devices for increasing the accuracy of fire. The military rifle can rarely get the care nec-

Digitized by Google

essary to keep the more delicate and more complicated sporting and target rifles in condition. Especially is this so in time of war when armies, those of the United States particularly, are largely composed of untrained volunteers most of whom have never previously carried a rifle. The arm that is put into their hands must be of such a character that it will be serviceable under almost all conditions, and as accurate as it may be made under this requirement.

Tests.—Before the adoption into our service of a rifle of new model the arm is subjected to tests as follows:

Endurance Test.—The arm is tested for endurance by firing from each of several rifles 5000 rounds, in forty lots of 100 rounds each and two lots of 500 rounds each.

At various stages of the endurance test the ballistic qualities of the arm are tested by firing for *velocity* and *accuracy*, and the working of the mechanism by tests for *rapidity of fire.*

Dust Test.—The rifle, with the breech block closed, is subjected to a blast of fine sand for two minutes, first with the magazine empty and again with the magazine filled with cartridges. After each exposure to the blast the surplus sand is removed by blowing, by wiping with the bare hands only, and by tapping the butt and muzzle on the ground. The rifle must then be capable of operation in single loading and in magazine fire.

Rust Test.—The rifle is thoroughly cleaned and all oil and grease removed by washing in soda water. The muzzle and chamber are tightly corked and the rifle is immersed in a saturated solution of sal ammoniac for ten minutes and then exposed to a damp atmosphere for forty-eight hours. The rifle must then be capable of operation, as before.

Defective Cartridge Test.—Cartridges cut through at the head, others cut through at the extractor groove, and others slit throughout their length are fired in the rifle.

Excessive Charge Test.—Five rounds are fired with cartridges loaded to produce a maximum pressure in the chamber one-third greater than the maximum pressure attained in service.

343. Life of the Rifle. Erosion.—Although the rifle remains

Digitized by Google

serviceable, as far as the operation of its mechanism is concerned, after endurance tests of 15,000 rounds or more, its accuracy begins to decrease considerably after about 8000 or 10,000 rounds, the number depending on the conditions of the firing. With its accuracy seriously impaired the rifle ceases to be suitable for service. The service life of the rifle must therefore be measured by the number of rounds that can be fired from it with accuracy, and not by the number fired in tests for endurance.

The accuracy of the rifle is principally affected through the erosion of the barrel by the powder gases. The gases, highly heated and moving with high velocity under great pressure, attack the walls of the bore, which are probably softened by the great heat, and cut irregular channels in the metal, destroying the surface of the bore and the rifling. The erosion is greatest at the seat of the bullet immediately in front of the cartridge case, and extends forward into the barrel for several inches. Beyond this the walls of the bore are practically unaffected.

When the erosion has become marked, the bullet is forced against an irregular surface and the metal of the bullet jacket, probably also softened by the heat, is unequally stretched on different sides, producing a decided eccentricity of the point of the bullet and great irregularity of the base. The sides of the bullet are deeply scored by the powder gases escaping past the bullet and by the irregularities of the bore.

The deformation of the bullet is the chief cause of its inaccuracy. At the same time its muzzle velocity is reduced by the escape of the gases past the bullet in the bore.

The life of our rifle was greatly increased by the adoption of the present nitrocellulose powder in place of the former nitroglycerine powder used in our service. With nitroglycerine powder the accuracy life did not exceed 5000 rounds.

344. The U. S. Magazine Rifle, Model 1903.—The present service rifle fulfills all the requirements enumerated in a previous paragraph as essential for a military rifle. As the Cadets of the Military Academy are armed with the rifle and familiar with its

Digitized by Google

operation through daily use, an extended description of the weapon is not necessary here. Consideration of some of its parts may be of advantage.

Two views of the mechanism of the rifle, with bolt in closed position, are shown in Fig. 288.

The Receiver.—The receiver is that part of the gun that contains the breech-closing bolt. It is held to the stock by the two guard screws, front and rear. The barrel is screwed into the front of the receiver.

Trigger Pull.—It will be observed that the rounded upper edge of the trigger bears against the bottom of the rear part of the receiver, against which it is held by the pressure of the sear spring, the trigger being pivoted in the slotted sear. When the trigger is pulled it has comparatively free movement until the rear point, or heel, of the trigger bears against the receiver. The nose of the sear, its rear part which projects upward through a slot in the receiver, is by this movement partially withdrawn from the sear notch in the cocking piece. When the heel of the trigger bears against the receiver the trigger leverage is reduced and a short but more decided pull is required to further withdraw the sear from the sear notch. The purpose of the first movement of the trigger, against slight resistance, is to prevent accidental discharge of the piece as the soldier first feels the trigger, and to increase the accuracy of fire by enabling the soldier to partially withdraw the sear while aiming, and to complete its withdrawal at the proper moment by a slight movement of the finger.

Cams.—In the operation of the mechanism the most decided resistances are encountered in the compression of the mainspring and, at times, in the insertion of a cartridge into the barrel and in the extraction of the fired shell. In order that these operations may be accomplished with the least fatigue to the soldier they are all performed by means of cams.

The mainspring is partially compressed in the movement of unlocking the bolt by the action of a cammed surface of the bolt against the cocking cam on the firing pin, and the compression of

Digitized by Google

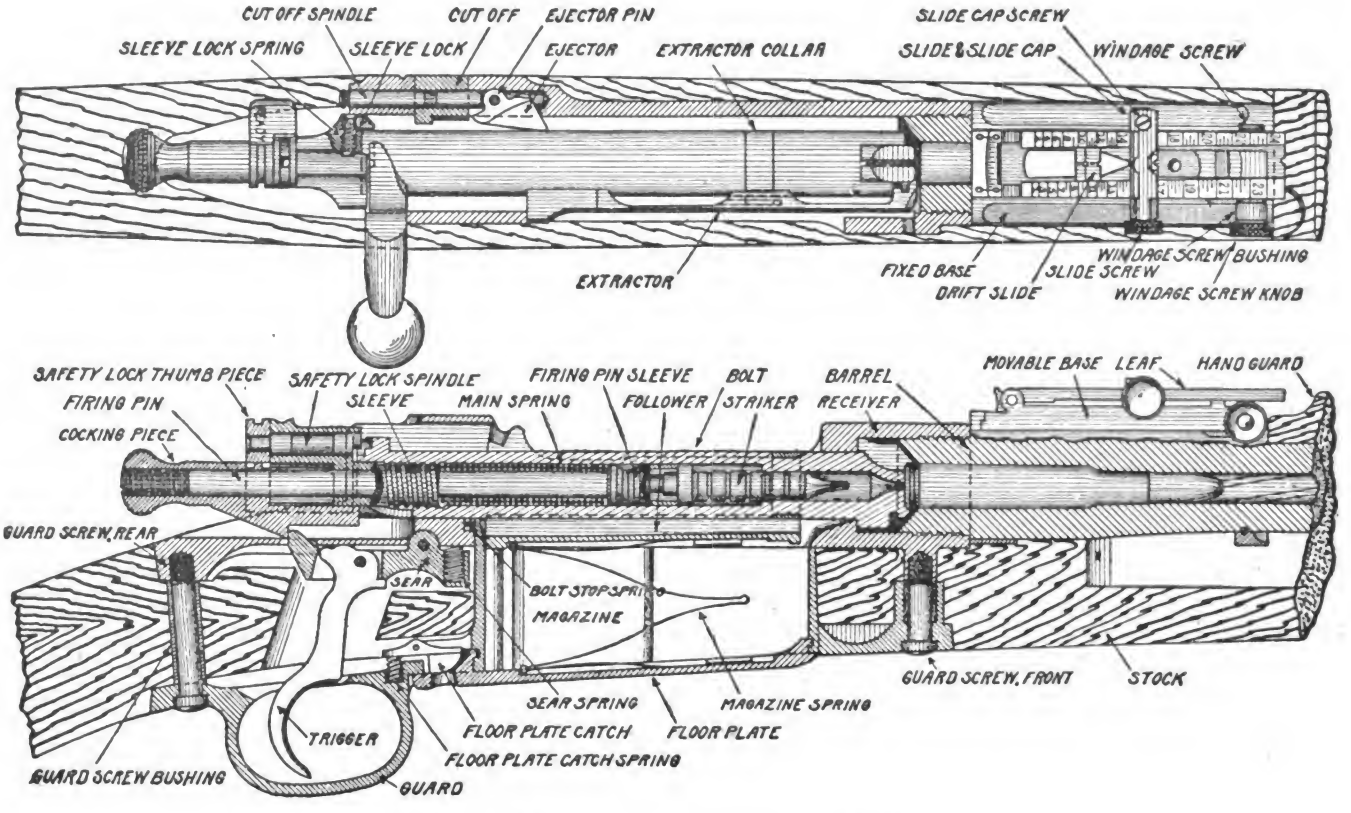

FIG. 288.—Mechanism of U. S. Magazine Rifle, Model 1903.

Digitized by Google

the spring is completed on the closing of the bolt by the action of the two locking lugs at front end of bolt against the cammed locking shoulders in the receiver. The cammed movement of rotation also forces the cartridge to its seat in the chamber. In the rotation of the bolt in opening, the extracting cam at upper end of bolt handle works against a cammed surface in the receiver and moves the bolt slightly to the rear, starting the fired shell from the chamber.

The Barrel.—The rifling of the barrel consists of four grooves 0.004 of an inch deep. The grooves are three times as wide as the lands. The twist is uniform, one turn in 10 ins., and right handed. The length of the barrel, measured from end to end, is 24.206 ins., a length that permits the use of this arm by the cavalry, and makes their fire as efficient as that of the infantry. Formerly the cavalry were provided with carbines, short guns with the same mechanism as the longer rifle and using the same ammunition.

The shorter length of barrel also improves the " balance " of the rifle in aiming and makes it easier to handle. Its disadvantage is that the reach in bayonet fighting is reduced.

The muzzle of the barrel is rounded to protect the rifling. Any irregularity of the muzzle end of the bore will seriously affect the accuracy of the arm by causing unequal pressure on the sides of the bullet as it is about to leave the bore.

345. The Sights, Model 1905.—The sight seats or bases for front and rear sights are bands that encircle the barrel, to which they are fixed by splines and pins. This method of attachment is preferable to the method formerly employed of screwing the sight seats directly to the barrel, as the sights are now more securely held and there is less likelihood of their adjustment being disturbed.

The windage screw, Fig. 288, which gives the movement in deflection to the rear sight, is acted on by a spring which prevents lost motion due to wear in the parts of the rotating mechanism.

Each division or point of the deflection scale of the rear sight corresponds to a lateral deviation of 4 ins. in 100 yds.

The leaf of the sight is graduated for elevations from 100 to

Digitized by Google

2850 yds., the sight for the latter range being taken through the notch on upper end of leaf.

With the leaf down the sights are set at 547 yds., battle range, at all positions of the slide on the leaf.

In the movement of the slide up the leaf, the drift slide, Fig. 288, in which are cut the sighting notches and peep, follows a drift curve cut in the leaf and thus compensates for the lateral deviation of the trajectory from the line of sight as adjusted on the piece. Explanation of the drift and of the adjustment of the line of sight will be found in a later paragraph entitled *Deviation*.

The front sight is fitted in a stud that before being screwed to its seat is adjusted laterally to its proper position on the individual rifle. The proper adjustment is obtained by actual firing with each rifle or by sighting through sights placed in the bore of the rifle (called bore sights) and marking the line of sight when the sight is set for 500 yds. range intersect the vertical line on the target on which the vertical cross wire of the bore sight is laid. The reason the sight is set for 500 yds. is that at this range the 150-grain bullet has no deviation and therefore the line through the peep and the front sight when the sight is elevated for a range of 500 yds. is in the vertical plane of the axis of the bore. Springfield armory uses the bore sighting system for adjustment of sights while Rock Island Arsenal adheres to the older system of adjusting sights by actual firing.

The sight radius of the piece, the horizontal distance between the point of the front sight and the rear edge of the notch or peep of the rear sight, is 22.1254 ins.

Rapidity of Fire.—With single loading, 23 aimed shots have been fired from the rifle in one minute, and with magazine fire, 25 shots in one minute. With the rifle held at the hip, 27 unaimed shots, loaded singly, have been fired in one minute, and with magazine fire, 35 shots.

The Bayonet.—The tang *B* of the bayonet, Fig. 289, is of one piece with the blade. In a recess in the tang is mounted the catch *H* which engages under the bayonet stud on the gun, lock-

Digitized by Google

ing the bayonet to the gun; and the catch *E* which secures the bayonet in its scabbard by engaging a hook provided in the scabbard. Either catch is released by pressure on the thumb piece *E*.

Appendages.—Among the appendages provided for the care of the piece is a *bullet jacket*

FIG. 290.

extractor, Fig. 290, a cylindrical steel plug rifled on the exterior to fit the bore. This is pushed down the bore from the muzzle until it rests on the bullet jacket, which may then be forced out of the barrel.

An aiming device is provided for purposes of instruction in aiming. It consists of the circular steel clip *a*, Fig. 291, which embraces the gun in rear of the rear sight and supports the standard *b* to which the cage *c* may be fixed at any desired height. The cage contains a reflector so arranged that the instructor sees in the reflector the images of the gun sights and of the object aimed at. He may therefore correct the soldiers' aim.

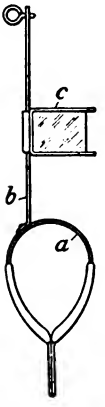

FIG. 291.

A cleaning thong and brush are contained in a metal case carried in the butt of the stock. The case is arranged to contain also a quantity of oil and a metal oil-dropper. A brass cleaning

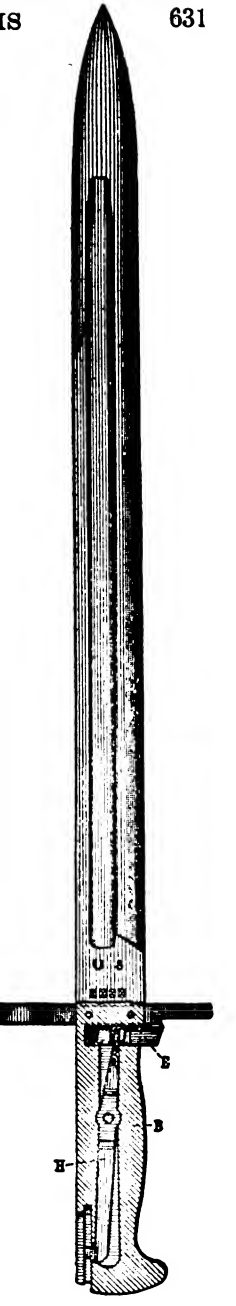

FIG. 289.

Digitized by Google

rod, a steel-front sight cover, and a suitable screw driver are provided with each piece.

346. Deviation. Drift.—The rifle has a right-handed twist. The drift proper is therefore to the right. But at the moment that the bullet leaves the bore the muzzle of the gun is actually pointed to the left of its aimed position. The movement of the muzzle is probably due to vibrations of the barrel caused by the passage of the bullet through the bore. The barrel being held firmly at the bands the vibrations will take place about these points as nodes. The vibratory movement of the barrel is such that at the moment that the bullet leaves the bore the muzzle is pointed to the left of its aimed position.

The horizontal deviation of the bullet from the axial plane of sight is therefore the resultant of the drift due to the rifling and the deviation due to the vibration of the barrel. Following custom, we will call the resultant horizontal deviation the drift.

As determined by experimental firings the drift of the 150-grain bullet, fired from the service rifle, is to the left of the axial plane of sight up to a range of 500 yds., and beyond that range the drift is to the right.

The drift slot in the sight leaf is so cut as to correct for all drift up to 600 yds. but for only part of the drift beyond that range.

The .22-caliber Gallery Practice Rifle.—This rifle is intended for gallery target practice. It differs from the service rifle only in the bore, the main spring and the rear sight.

The bore is reamed to 0.219-in. diameter, and the grooves are 0.002 in. deep. The rifling consists of six plain grooves having a uniform right-hand twist of one turn in 25 ins.

The .22 short commercial ammunition used in the rifle is first loaded in a holder shown in Fig. 292, having the general outline of the .30-caliber cartridge but differing in dimensions therefrom.

The holder consists of the body *F*, the nut *A*, the plunger *B*, and the spring *D*. The cartridge *C* is shown loaded in its position.

To load the cartridge the plunger is pulled back against the spring until its shank projects through a central hole in the nut *A*.

Digitized by Google

This movement uncovers a slot in the upper side of the body *F* through which the cartridge is entered. The plunger spring then drives the cartridge forward to its seat.

The holder containing the cartridge is loaded into the gun in the same manner as the regular cartridge. When the trigger is

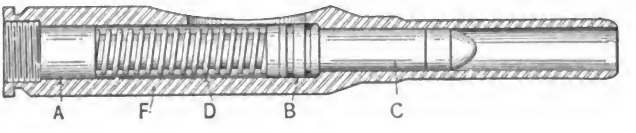

FIG. 292.

pulled the firing pin striking the rear end of the plunger drives the firing points at its front end into the rim of the cartridge and fires it.

347. The Ball Cartridge.—The ball cartridge, Fig. 293, consists of the cartridge case, the primer, the charge of powder, and the bullet.

The Cartridge Case.—The cartridge case is made from a circular disk of brass cut from a flat ribbon 0.13 of an inch thick. The disk is first bent into the form of a cup and then drawn out in successive operations by being forced by punches through dies successively diminishing in diameter. In each draw press the length of the cartridge is increased and its diameters and thickness of wall diminished. Five draws are required to bring the cartridge to the desired size. After the cupping operation and after each of the

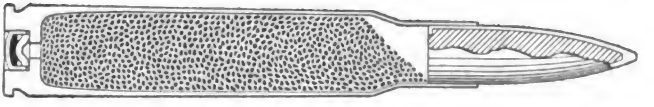

FIG. 293.

first two draws and after the bunting operation (squaring up the head which has become rounded during the preceding drawing operations) following the third draw the case is softened by annealing, which removes the brittleness of the metal caused by the drawing process. The cases are trimmed as required. The head of the

Digitized by Google

cartridge case and the primer pocket are formed in a press. The mouth of the case is then annealed and the reduction of the neck and shoulder is accomplished in two operations in another press. The extractor groove is turned in the head, and the vent is punched through the bottom of the primer pocket.

Body.—The body of the cartridge is of greater diameter than the rifled bore of the gun, in order to provide the necessary chamber space in the shortest practicable length. The enlarged body is a disadvantage in that it increases the bulk of the cartridge, and requires a larger chamber in the gun and greater thickness in the working parts of the gun. But in the present development of powders it has not yet been possible to produce from a cylindrical cartridge of reasonable length the desired ballistics for the rifle.

Head Space.—The space in the rifle between the head of the bolt and the surface against which the cartridge bears is called the head space. The head space in the rifle is of a length to allow proper clearance between the bolt and head of the cartridge when the cartridge is fully inserted in the chamber. The head of the cartridge should always occupy the same position in the rifle, in order that the blow of the firing pin on the primer may be uniform, thus reducing the chances of misfires and punctured primers.

In order that the position of the primer in the gun shall vary the least the head space should be as short as possible; that is, the bearing surface of the cartridge should be close to the head of the cartridge, since in the manufacture of the cartridge the variations in a short dimension are likely to be less than in a longer one.

The cartridge with flanged head, Fig. 294, used in former service

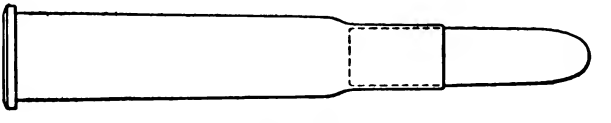

FIG. 294.

rifles, has an advantage over the present cartridge in this respect. The head space with the flanged cartridge measured from the seat

Digitized by Google

for the front edge of the flange, was about 1/10 of an inch long, while the head space in the present rifle which is measured from the seat for the sloping shoulder of the cartridge, is nearly 2 ins. long. In addition the bearing surface of the present cartridge is sloped, so that more extensive variations in the position of the head of the cartridge are likely to occur.

The present type of cartridge was adopted because it is better adapted to magazine loading and because it occupies less room when packed either in clips or single.

The Primer.—The primer, Fig. 293, consists of the cup, the anvil, and the percussion composition. A pellet of moist percussion composition is put into the cup which is previously shellacked so that the composition will adhere. A shellacked disk of paper is pressed in tightly over the composition to keep out moisture. The anvil of hard brass is then forced into the cup. The primers are dried for several days in a dry house.

The cup of the primer is made of gilding metal, an alloy of copper much softer than the brass of the cartridge case. The metal of the cup must be sufficiently soft, and of the proper thickness, to permit a large part of the blow of the firing pin to be transmitted to the percussion composition, thus insuring explosion of the primer. At the same time the metal must be sufficiently hard to resist puncture by the firing pin. The firing pin strikes the primer with an energy of about 17 in. lbs.

The priming composition is as follows:

Chlorate of potash,
Sulphide of antimony,
Sulphur.

The finely pulverized ingredients are thoroughly mixed wet, and the composition is always handled wet, in which condition it is safe to handle.

This composition is safe, sufficiently sensitive, and emits a large body of flame. The large body of flame makes the composition superior for use with smokeless powders to the fulminate of

Digitized by Google

mercury formerly used in all primers and still largely used in the primers in sporting cartridges and others.

The primer is seated slightly below the head of the cartridge in order to diminish the liability to accidental explosion of the cartridge in handling.

The Powder Charge.—The powder charge consists of about 48 grains of nitrocellulose powder. The weight of powder required to produce the muzzle velocity of 2700 ft. varies in different lots of powder. The weight of charge, therefore, varies slightly in different cartridges.

Bullets.—The core of the bullet, Fig. 293, is an alloy of 16 parts of lead and one part of tin. The jacket, of cupro-nickel, is drawn from a disk in the same manner as the cartridge case. The lead slug is forced into the jacket, the point of the bullet shaped in a press, and the rear end of jacket turned squarely over the base of the bullet.

The bullet weigh 150 grains and is given a muzzle velocity of 2700 ft. per sec. with a maximum pressure not exceeding 52,000 lbs. per sq.in. Fig. 296 shows the present sharp-pointed bullet for comparison with the round-nosed bullet formerly used and shown in Fig. 295. The latter bullet weighed 220 grains.

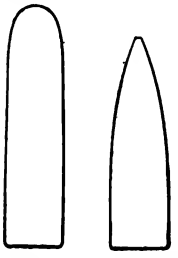

FIG. 295. FIG. 296.

The *bearing surface* of a bullet, that part of the bullet that comes in contact with the walls of the bore, should end abruptly, in order that as the bullet leaves the muzzle the bearing against the walls of the bore will cease at the same instant on all sides, and the bullet will not bed eflected by the longer contact of any one point with the walls of the bore. The bearing surface of the service bullet terminates at the base. The base of the bullet should therefore be square with the axis, and the edge of the base should be as sharp as the metal of the jacket will permit.

348. The Blank Cartridge.—The bullet of the ball cartridge guides the cartridge from the magazine into the chamber of the rifle. In order that blank cartridges may be loaded from the

Digitized by Google

magazine, a hollow paper bullet, Fig. 297, replaces the metal bullet of the ball cartridge. The paper bullet is charged with 5 grains of E. C. powder held in place by a drop of shellac. The bullet is made by rolling a strip of paper into a tube of proper length, the

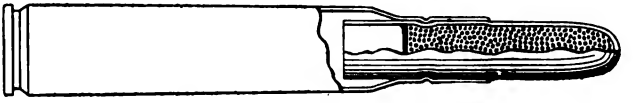

FIG. 297.

end of the tube being afterwards closed into the rounded head by pressure in a machine. The strip of paper that forms the tube is gummed only on the outside edge so that the charge may readily burst the bullet at the muzzle of the gun. If the paper were gummed over its entire length the bullet would be so stiff that it might act as a rocket and do injury at some distance from the muzzle.

The propelling charge in the cartridge case is 10 grains of E. C. powder.

The blank cartridge is made 1/10 of an inch shorter than the ball cartridge, to prevent the accidental assembling of a ball cartridge into a clip with blank cartridges. The machine in which this operation is performed is adapted for cartridges of one length only. In another model of blank cartridge, shown in Fig. 298, cases are

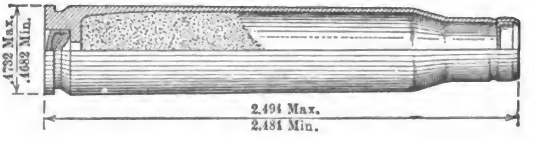

FIG. 298.

used which have slight defects rendering them unsuitable for use with regular ammunition. The charge is 12 grains of E. C. powder.

The case is closed by means of a paper cup inserted in the mouth of the case and shellacked to render the ammunition waterproof.

Digitized by Google

Dummy Cartridge.—The case of the dummy cartridge, Fig. 299, is tinned and provided with six longitudinal corrugations, also three circular holes in the corrugated portion.

The tinning, corrugations, and holes afford unmistakable means for distinguishing the dummy from the ball cartridge, both by sight

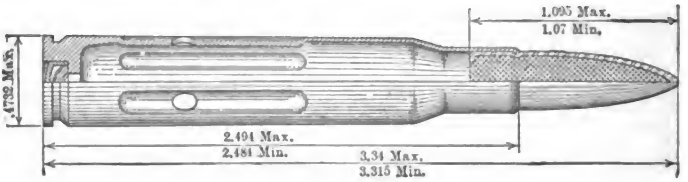

FIG. 299.

and touch. The bullet is the same as in the ball cartridge. The dummy primer has cup and anvil, but no percussion composition.

The Guard Cartridge.—The long range of the bullet of the ball cartridge and its great penetrative power render the ball cartridge unsuitable for the use of guards in times of peace, and for use in cities or other crowded places at times of riot and disturbance. The guard cartridge, Fig. 300, is provided for these uses.

The same bullet is used as in the regular ammunition.

The charge, about 9.1 grains bullseye powder, or 16.7 grains Du Pont Rifle Smokeless No. 1, gives a muzzle velocity of 1200 ft. per sec. This cartridge gives good results at 100 yds., and has

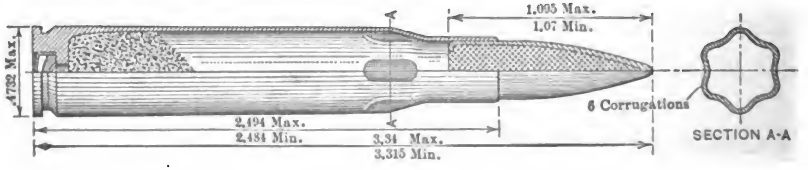

FIG. 300.

sufficient accuracy for use at 150 and 200 yds. The range of 100 yds. requires a sight elevation of 450 yds., and ranges of 200 and 300 yds. require elevations of 650 and 850 yds., respectively.

Digitized by Google

The corrugations at the front of the case afford means of distinguishing this cartridge from the regular ammunition.

349. Proof of Ammunition.—Ammunition is proved by velocity pressure and accuracy tests made with the arm in which the ammunition is to be used. Service rifle cartridges are also tested to determine whether they are waterproof.

Velocity Test.—The velocity is measured at 78 ft. from the muzzle, the first velocity screen being placed 3 ft. from the muzzle and the two screens 150 ft. apart. The mean velocity of 40 shots must not differ more than 15 ft. from the standard.

Accuracy Test.—The accuracy test for rifle ammunition consists of several series of 10 shots each fired at a target 500 yds. from the muzzle. The gun is fixed in a rest. The target is a heavy steel plate about 20 ft. square, painted white and marked with horizontal and vertical black lines 2 ft. apart.

The horizontal and vertical coordinates of each shot mark are measured from a convenient origin. The means of the horizontal and vertical coordinates are respectively the horizontal and vertical coordinates of the *center of impact.*

The distance of each shot from the center of impact is measured and the mean of these distances is the *mean radius* of the group of shots, or, as it is sometimes called, the radius of the circle of shots.

The mean radius of six targets of 10 shots each, at a range of 500 yds., must not be greater than 5 ins.

The mean of the vertical distances of the shots from the center of impact is the *mean vertical deviation*, and the mean of the horizontal distances from the center of impact is the *mean horizontal deviation.*

In the proof of ammunition the mean horizontal deviation is not measured, as the horizontal deviation depends upon the atmospheric conditions rather than upon the ammunition.

Equipment for Accuracy Test.—As it would often be most inconvenient to make on the target the measurements necessary for the determination of the mean radius and deviations of a group of

Digitized by Google

shots, the ammunition proof range is provided with a *camera obscura* in a building in front and to one side of the target and near it. The lens of the camera forms an image of the target on a paper facsimile of the target constructed to the proper scale so that the lines of the image coincide with the lines of the target facsimile. An observer in the camera marks with a pencil the image of each shot mark made on the target, and the desired measurements are then conveniently made from the paper facsimile.

Pressure Test.—Ten rounds of each lot will be fired in the pressure barrel. The maximum pressure must not exceed 52,000 lbs. per sq. in.

Test for Stripping of Bullet Jacket.—For this test 100 rounds are fired through paper screens placed 10 and 50 ft. from the muzzle. The holes made through the screens indicate whether the jackets have stripped or whether the bullets have turned sideways in flight.

Waterproof Test.—Ten rounds are fired for velocity after the cartridges have been immersed in water to a depth of 12 ins. for twenty-four hours, then wiped dry and allowed to attain a normal temperature of 70° F. The mean velocity of these cartridges must not vary from the standard by more than 25 ft. per sec., and the mean variation in velocity must not exceed 30 ft. per sec.

Automatic Shoulder Rifles.—Automatic rifles are those in which the operations of loading the cartridge, firing and extracting and ejecting the fired shell are effected automatically, the necessary energy being supplied by the charge. Their mechanism is similar to that of the machine guns to be described in the next chapter.

While satisfactory designs of automatic rifles of low power have long been available there has been difficulty in obtaining designs of such rifles of power sufficient for military purposes and suitable in other respects. The question will probably be settled by improvements in machine guns and reduction in their weight until they become suitable for use as military shoulder arms.

Digitized by Google

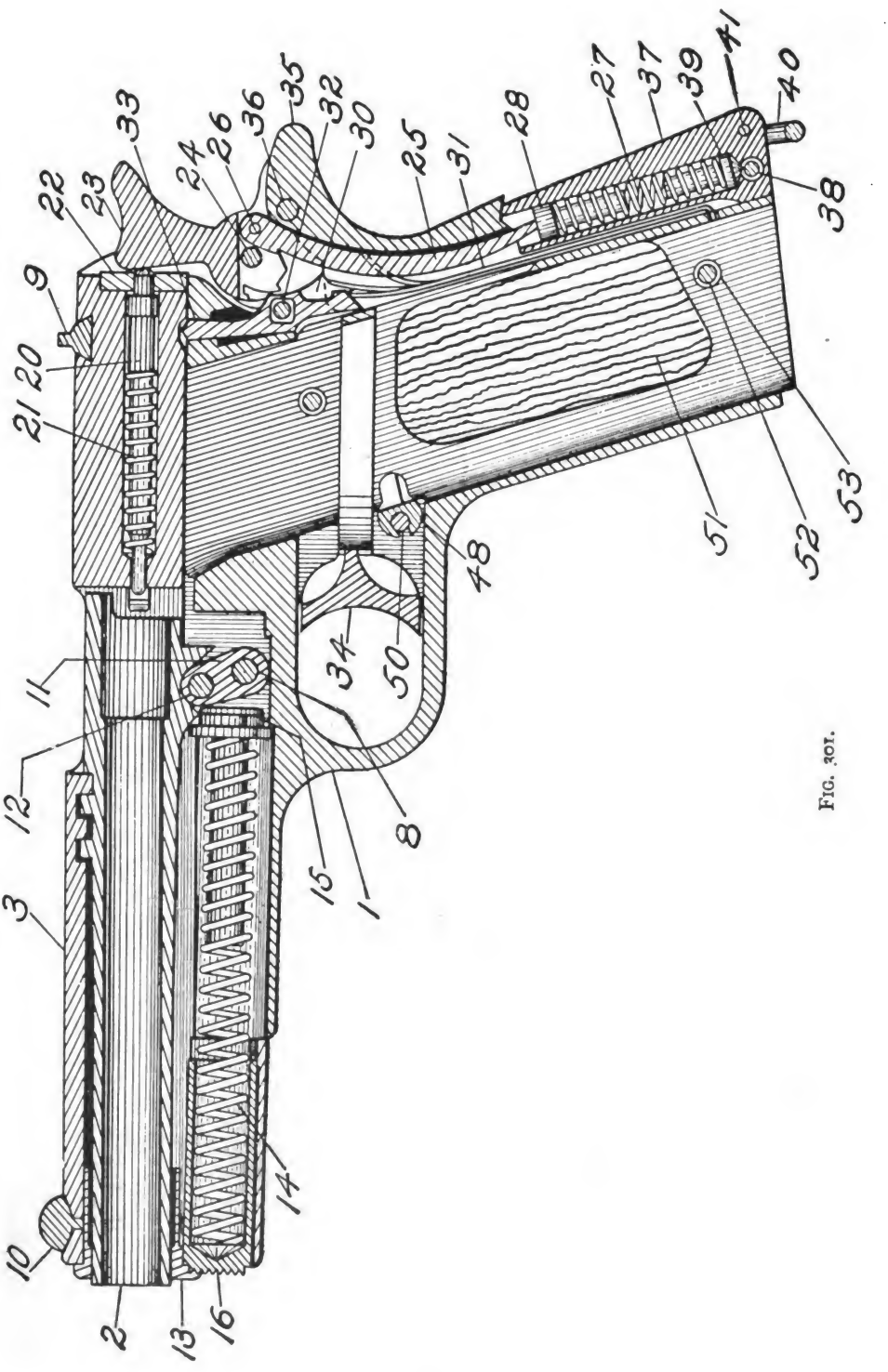

FIG. 301.

Digitized by Google

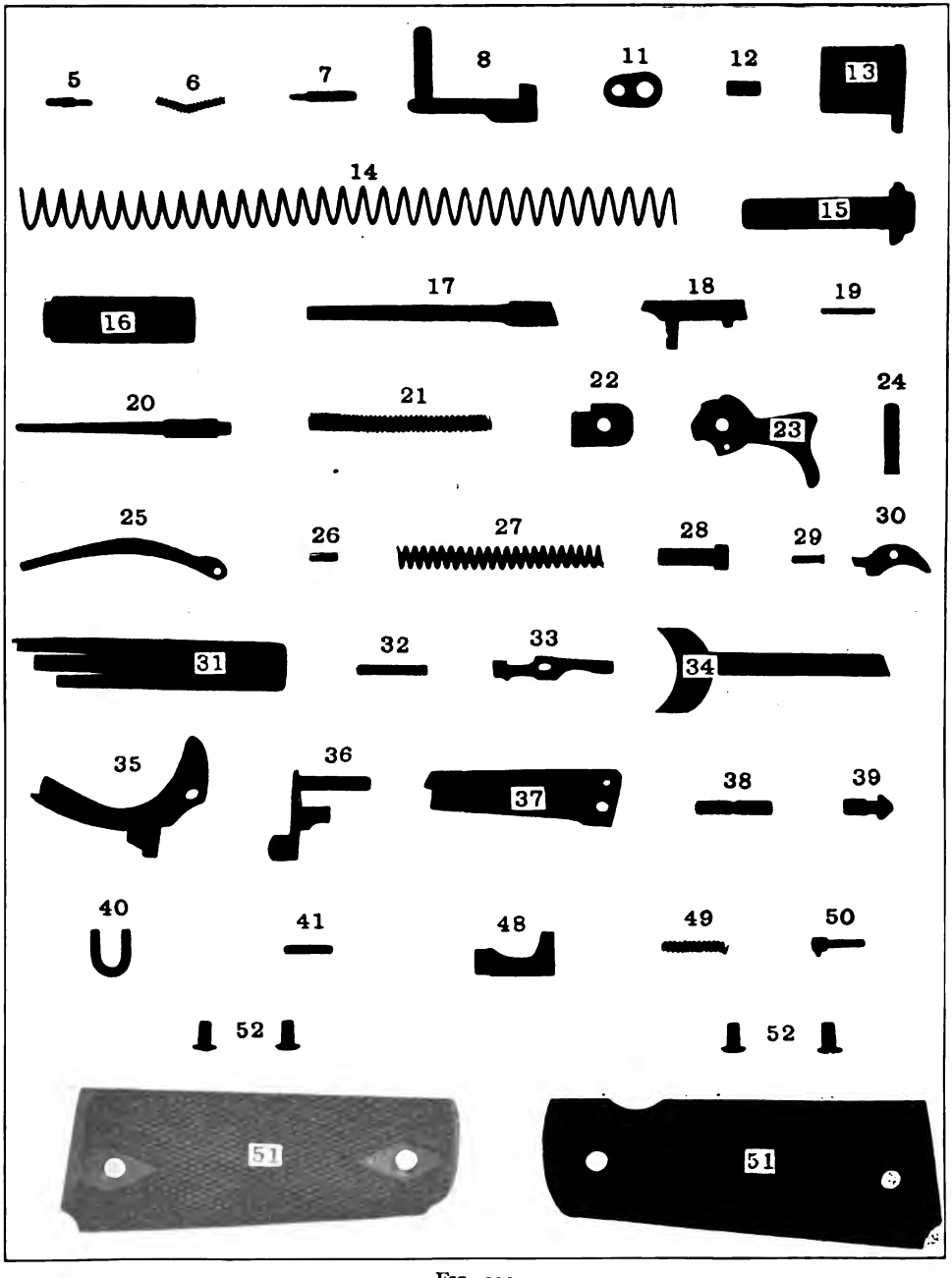

FIG. 302.

Digitized by Google

The .45 Caliber Automatic Pistol Model of 1911

350. Method of Action.—In this pistol the recoil of the barrel 2 and the slide 3, Fig. 301, is used to automatically extract and eject the fired cartridge and to cock the hammer. The counter recoil of these parts under the action of the recoil spring 14, loads a new cartridge. It is then only necessary to pull the trigger to fire each round up to the capacity of the magazine, 7 rounds.

Principal Parts.—The principal parts of the pistol are the receiver 1, the slide 3 and the barrel 4. Guides formed on top of the receiver engage with corresponding ones at the bottom of the slide and permit the latter to have a backward and forward motion in operation. The lower part of the receiver forms the handle of the pistol and the housing for the magazine.

The barrel is supported at the front end by the barrel bushing, at the front end of the receiver. The rear end of the barrel is supported by a link 11, which is hinged to the barrel at 12, and to the receiver at 8. When in firing position, as shown in the figure, two lugs on the upper surface of the barrel engage corresponding grooves on the slide. These lugs lock the barrel to the slide. The extension of the slide around the firing pin then acts as a breech block for the barrel.

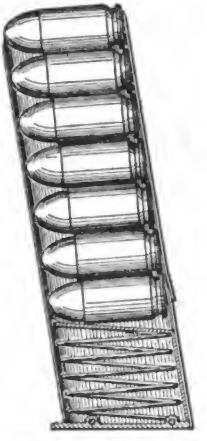

Fig. 303.

The recoil spring is compressed between a lip projecting down from the barrel bushing, which latter is locked to the slide by an interrupted lug, and the lug which carries the hinge 12 near the rear end of the barrel. When the barrel has moved a short distance to the rear this lug comes in contact with a shoulder on the receiver, which prevents further motion.

The recoil spring thus practically does all its work in pushing forward on the slide.

The principal individual parts of the pistol are shown in Fig. 302. The magazine is shown in Fig. 303.

Digitized by Google

The nomenclature of the parts shown in Figs. 301 and 302 is as follows:

NOMENCLATURE

1. Receiver
2. Barrel
3. Slide
8. Slide stop
9. Rear sight
10. Front sight
11. Link
12. Link pin
13. Barrel bushing
14. Recoil spring
15. Recoil spring guide
16. Plug
17. Extractor
18. Ejector
19. Ejector pin
20. Firing pin
21. Firing pin spring
22. Firing pin stop
23. Hammer
24. Hammer pin
25. Hammer strut
26. Hammer strut pin
27. Mainspring
28. Mainspring cap
29. Mainspring cap pin
30. Sear
31. Sear spring
32. Sear pin
33. Disconnector
34. Trigger
35. Grip safety
36. Safety lock
37. Mainspring housing
38. Housing pin
39. Housing pin retainer
40. Lanyard loop
41. Lanyard loop pin
51. Stocks, right and left
52. Stock screws (4)

351. Operation in Firing.—Assuming the pistol as just having been fired, and with the parts in positions shown in the figure, the following movements take place. The slide and barrel recoil to the rear together. The rear end of the barrel is constrained to the circular motion of the link 11 around its center 8. This soon draws the rear end of the barrel down, disengaging the lugs at the top which lock it to the slide. The lug on the bottom of the barrel then comes in contact with the shoulder on the receiver and the motion of the barrel stops. The slide continues to the rear, withdrawing the fired cartridge by means of the extractor and ejecting it through the opening on the right. In this motion the end of the

Digitized by Google

slide comes in contact with the hammer 23 and turns it around its axis 24, thus compressing the mainspring 28 through the strut 25.

The hammer is caught in the cocked position by the sear 30, pivoted on its pin 32, and held in contact with the hammer by the sear spring 31. The recoil spring 14 now drives the slide forward and the motions just described are reversed, except that the hammer remains cocked until the trigger is pulled. In its forward motion the rear extension of the slide catches a cartridge pressed up by the magazine spring and drives it into the chamber.

Firing Mechanism.—The firing pin is in the slide directly in line with the axis of the barrel. Its spring 21 pushes it to the rear, preventing it from projecting from the front face of the part of the slide which forms the breech block.

If the hammer is slowly let down on the firing pin it will press it forward but not enough to make it project from the forward end of the breech block. If, however, the hammer is made to strike a blow on the end of the firing pin, as when the trigger is pulled, the momentum of the firing pin will carry it forward sufficiently to fire the cartridge. As previously stated rotation of the hammer compresses the mainspring 27 through the strut 25, and the hammer is held in the cocked position by the sear 30 hinged at 32 and pressed against the hammer by the spring 31.

The trigger 34 does not act upon the sear directly but acts through the piece 33 called the disjunctor. The disjunctor is loosely hinged upon the same axis that holds the sear. A branch of the sear spring presses the lower end of the disjunctor to the rear and presses the entire disjunctor upward. When in the upper position the lower end of the disjunctor is in front of the lower end of the sear. A pull on the trigger will then drive the lower ends of the disjunctor and sear backward and thus release the sear from the hammer. If, however, the disjunctor is pressed down its lower end no longer acts upon the sear and a pull on the trigger will move the disjunctor without moving the sear. Except when the parts are in the position shown, the slide presses the disconnector down a sufficient amount to release it from connection with the sear. This

Digitized by Google

arrangement prevents the firing of more than one cartridge at a time, even though the trigger is kept pulled.

Safety Features.—1. The safety lock 36 consists of a small plate pivoted near the rearmost point of the receiver. When the slide is in its forward position and the hammer 23 is full cocked, the safety lock 36 may be pushed up by a projecting thumb piece, thereby locking the slide and hammer in position. The slide is locked by the upper corner of the lock 36 engaging in a recess cut in the under part of the slide; and the hammer is locked by means of a stud on the inside of the lock 36 which is carried up with the lock until it stands in rear of the lower arm of the sear 30, blocking the sear and consequently the hammer.

2. The grip safety 35 is pivoted around the same point as the safety lock 36. Its lower part projects from the rear face of the handle under pressure of the short leaf of the sear spring 31 and when in this position locks the trigger against rearward pull. When the handle is grasped as in firing, the grip safety 35 releases the trigger.

352. The Magazine.—A longitudinal section of the magazine is shown in Fig. 303. The magazine tube is of nearly rectangular cross-section. A follower is pressed upward by a spring coiled so as to fit inside the tube. Cartridges are entered from the top by compressing the spring. The magazine holds seven cartridges. It is placed in the handle of the pistol from the bottom and securely held by a spring catch 48, Fig. 301.

When the last cartridge in the magazine has been fired, that fact is indicated by the follower pressing up on a lug on the slide stop, thus causing a catch on that stop to enter a notch on the left-hand side of the slide. This holds the slide in the open position.

The empty magazine is removed from the handle by pressing on the spring catch 48, Fig. 301. A filled magazine may be entered with the slide either in the closed or in the open position. If entered in the closed position it is necessary to draw the slide back and let it run forward before the pistol can be fired. If the maga-

Digitized by Google

zine is entered in the open position it is necessary to press down the slide lock before firing can begin.

Ammunition and Ballistics.—The ammunition is shown in Fig. 304. The brass case is provided with a cannelure to prevent the bullet being forced down on the powder.

The primer is nearly of the same type as that for the .30 caliber rifle.

The bullet is of lead and tin composition with a cupro-nickel or gilding metal jacket. The bullet weighs 230 grains while the smokeless charge is usually only about 5 grains.

Tests.—Pressure, velocity and accuracy tests of the ammunition are made before acceptance. The mean muzzle velocity is 800 ft. per sec. The mean variation must not be more than 15 ft. from that figure. The maximum pressure must not exceed 16,000 lbs. per sq.in. Tests to determine the degree of waterproofing are made on cartridges which have been immersed in water.

Digitized by Google

CHAPTER XV

MACHINE GUNS

353. Classification.—As far as power used for operation is concerned machine guns are of three classes, viz.:

Hand operated,
Recoil operated,
Gas operated.

The rate of fire from the barrel of a machine gun may be as high as 600 or 700 rounds per minute. If such a rate is to be continued for any considerable period it becomes necessary to cool the barrel by some means to prevent excessive erosion, or actual melting of metal from the surface of the bore. In the Gatling gun the use of 10 barrels reduces the rate of fire from any one barrel to a point sufficiently low to permit of continuous fire without special means of cooling.

In the modern single-barreled machine guns or automatic rifles two methods of cooling, viz., air cooling and water cooling are in use. The former is not as efficient as the latter, but has been adopted on account of the saving in weight.

Machine guns of the air-cooled type generally require intervals of rest for cooling between spurts of fire.

354. The Gatling Gun.—This hand-operated machine gun is no longer used in the mobile army, having been replaced by lighter machine guns of the single-barreled type. But, as it is still in use for defensive purposes at coast fortifications, and as it was the first successful machine gun, a description of its mechanism will be given.

Fixed to a central shaft *S*, Fig. 304, are the ten .30-caliber rifled barrels *B* held in the barrel plates *P*, the carrier block *C*, provided with grooves which receive the cartridges successively and guide them into the barrels, the lock cylinder *L*, provided with guide slots

Digitized by Google

in which the breech blocks for the barrels slide to close and open the breech; and the worm wheel *G*, by means of which the shaft and attached parts are rotated. The shaft is supported at each end in a frame, the sides of which also support the shaft of the rotating crank *K*.

The parts behind the rear barrel plate are completely inclosed in a cylindrical bronze casing which keeps out dust and protects

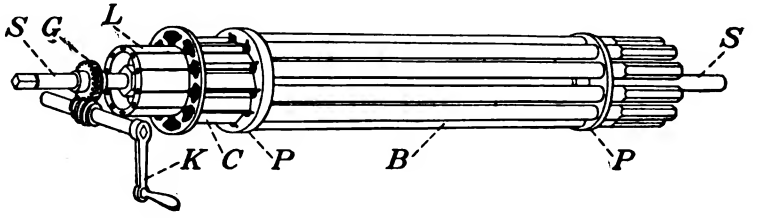

FIG. 304.

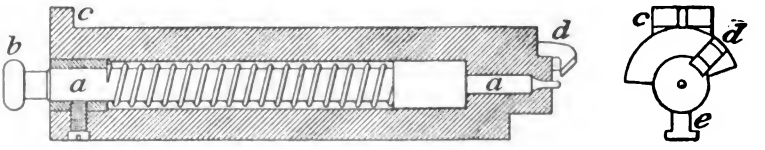

FIG. 305.

the operating parts against injury. Within the casing is a hollow cylinder, called the cam cylinder, on the interior surface of which a continuous cam groove is cut.

The breech bolt, Fig. 305, one for each barrel, carries the firing pin *a*, and its spring, and the extractor *d*. The guide rib *e* at the bottom of the bolt engages in a guide slot of the lock cylinder, *L*, Fig. 304. The lug *c* on top of the bolt engages in the cam groove cut in the walls of the cam cylinder.

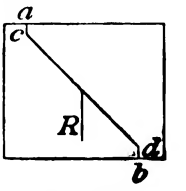

FIG. 306.

The cam groove, represented in Fig. 306, as though visible through the casing and cam cylinder, extends continuously around the interior of the cylinder. The top and bottom parts of the *a* and *b*, follow lines

Digitized by Google

cut from the cylinder by planes at right angles to its axis. These parts of the groove are joined by the inclined parts *cd*. The cam cylinder is fixed to the casing and does not revolve.

355. Operation.—As the lock cylinder, *L*, Fig. 304, rotates with the barrels in a clockwise direction, the uppermost breech bolt is in its rearmost position, being held there by the lug *c* of the bolt moving in the circular part *a* of the groove. While the bolt is in this position a cartridge is placed by the feed mechanism in the top groove of the carrier block *C* in front of the bolt. As the bolt in its rotation moves downward on the right side it is moved

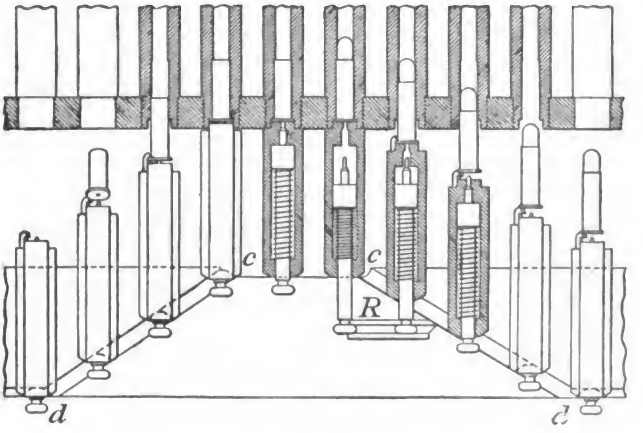

FIG. 307.

forward by the cam groove *cd* and pushes the cartridge into the barrel. During this movement the cocking head of the firing pin, *b* Fig. 305, is caught by a grooved rib, *R*, Figs. 306 and 307, and the firing pin is prevented from moving forward with the bolt. The method of operation will be understood from Fig. 307, which shows a development of the cam groove and rotating parts. The lines *dd* and *cc* in Fig. 307 represent respectively the developments of the parts *a* and *b* of the groove as shown in Fig. 306.

When the barrel is in its lowest position the head of the firing pin leaves the rib *R*, and the firing pin, under the action of its

Digitized by Google

spring, strikes and fires the cartridge. As the breech bolt moves upward on the left side it is drawn to the rear by the cam groove, extracting the fired shell from the barrel and ejecting it to the left through a slot in the casing.

The Feed.—A hopper is formed in the top of the bronze casing immediately over the carrier block, *C*, Fig. 304 and *e*, Fig. 308. The device, called the Bruce feed, for feeding cartridges to the gun, is fixed in a socket at the mouth of the hopper. Pivoted on the standard, *ac*, Fig. 308, is a swinging piece *b*, provided with two flanged grooves which engage the heads of the cartridges. The grooves in *b* are quickly filled by stripping the cartridges from the paper boxes in which they are packed. The cartridges from one of the grooves in *b* pass immediately through the groove in *c* and are fed one at a time to the carrier block *e* by the wheel *d* which is caused to revolve by the carrier block. When one of the grooves in *b* is empty the weight of the cartridges in the other groove causes the piece *b* to swing to one side and bring the full groove over the groove in *c*.

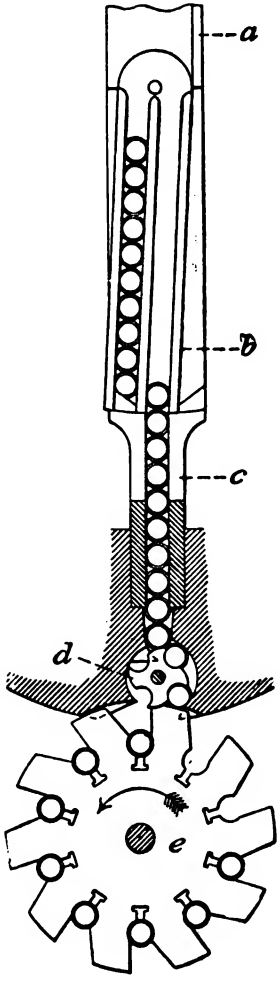

FIG. 308.

356. The Maxim Machine Gun, Model of 1904.—This is a recoil operated gun of the water-cooled type. The recoil of the single barrel and attached mechanism is utilized to perform the operations necessary in continuous firing.

The barrel, 32 Fig. 309, is inclosed in a cylindrical water jacket 97, and slides in its bearings in stuffing boxes at each end of the water jacket. Fixed to the rear end of the water jacket is the

Digitized by Google

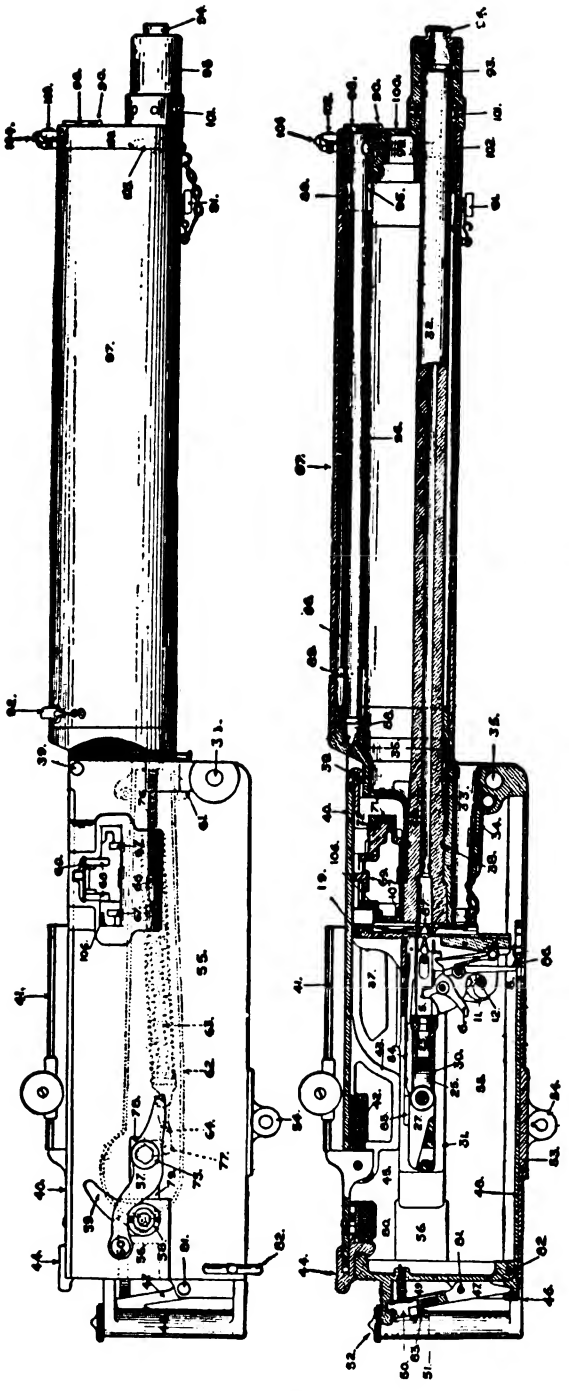

FIG. 309.—Maxim Automatic Machine Gun.

Digitized by Google

breech casing 55, a rectangular steel box that incloses the operating mechanism and provides means, 35 and 54, for the attachment of the gun to its mount.

Method of Action.—The barrel and the breech mechanism recoil together until after the bullet has left the bore. When the barrel has reached the end of its recoil the breech mechanism continues to the rear, opens the breech, and extracts the fired shell; and, returning under the action of a spring, inserts a new cartridge in the barrel and fires the piece. These actions are repeated as as the trigger is pressed.

The cartridges are fed to the gun in lt, which is automatically drawn ugh the feed mechanism above the ech in such manner as to present a cartridge after each discharge.

Recoiling Parts.—The recoiling parts, 310, comprise the barrel *a*, the two il plates *b* fixed to the breech of the barrel, the operating crank shaft *e* fixed in bearings in the recoil plates, and the breech mechanism which slides between the recoil plates and is operated by means of the crank shaft *e*.

The recoil plates slide in grooves provided in the sides of the breech casing 55, Fig. 309. The left recoil plate extends to the front of the breech and operates the feed mechanism above the barrel. The crank shaft 75 projects on both sides through slots 79 in the cas-

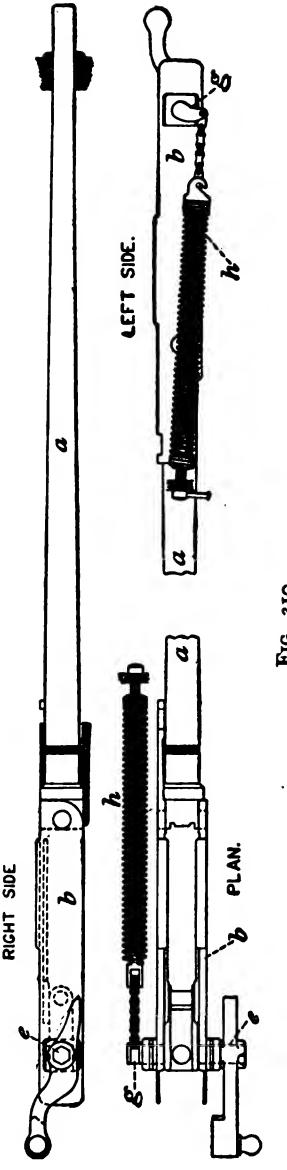

FIG. 310.

Digitized by Google

ing. The movement of the recoiling parts to the rear is stopped when the crank shaft strikes the rear edges of the slots. Fixed to the right end of the shaft is the cam lever 57. During the recoil, and after the shot has left the bore, the lower surface of the cam lever bears on the roller 58, and as the recoil continues

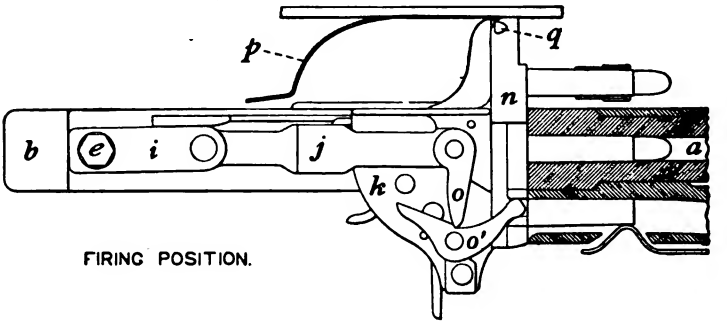

FIG. 311.

the cam lever, riding on the roller, is rotated upward, thus producing a downward movement to the crank on the shaft between the recoil plates. The crank is seen in Fig. 310 and at *i*, Figs. 311 and 312. Attached by links to the fusee, *g*, Fig. 310, on the crank shaft outside the breech casing, is the operating spring *h* which at its forward end is attached to the breech casing. On recoil and rotation of the shaft the spring is extended, and at the end of the recoil the reaction of the spring returns the parts to the firing position.

357. The Breech Mechanism.—The breech mechanism is shown in Figs. 311 and 312. It consists of the lock *k* which contains the firing mechanism; the carrier *n*, a narrow piece which slides up and down the front of the lock and is provided in front with a flanged groove to engage the head of the cartridge; and the forked link *j* pivoted at its rear end to the crank *i* on the operating shaft *e*. The breech mechanism slides back and forth between the recoil plates *b* in grooves cut in the sides of the recoil plates.

Digitized by Google

The parts being in the firing position the flanged groove of the carrier *n* engages the head of a cartridge in the feed belt above the barrel and also the head of the cartridge in the barrel. When the piece is fired the barrel and breech mechanism start to the rear together. At the end of the movement of the barrel, the breech mechanism is drawn farther to the rear between the recoil plates by the rotation of the crank *i*, as shown in Fig. 312.

In this movement the carrier *n* is guided by its bearings *q* which move on the upper surfaces of solid cams 37, Fig. 309, fixed

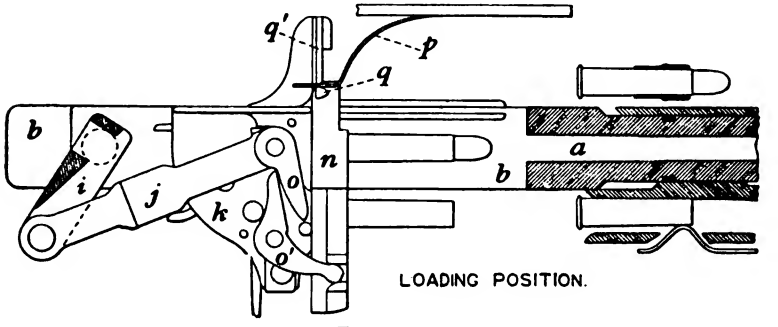

FIG. 312.

to the side plates of the breech casing. The movement of the carrier is at first straight to the rear withdrawing the cartridge from the belt and the fired shell from the chamber. The carrier is then depressed by a guide lug 43, Fig. 309 and *p*, Figs. 311 and 312, attached to the top plate of the breech casing. The loaded cartrdige is thus brought opposite the barrel and the fired shell opposite the ejector tube 33. The reaction of the coiled spring now returns the parts to the firing position, the carrier *n*, Figs. 311 and 312, moving straight to the front in its depressed position. After the cartridge has been placed in the chamber, the carrier is slid upward by the action of the finger *o* against the lifting lever *o'*, the finger *o* being fixed to the link *j*. The carrier leaves the fired shell in the ejector tube where it is held by a spring to prevent its falling back into the mechanism. It is ejected from the tube by the next succeeding shell.

Digitized by Google

The Firing Mechanism.—The firing mechanism, shown in Fig. 313, is contained between two plates *k*. The solid part of the forked link *j* acts in its downward movement against the projecting end of the tumbler *c*, withdrawing the firing pin until it is caught by the safety catch *e*. At the same time the sear *d* engages in the notch of the tumbler where it is held by one leaf of the spring *b*. The trigger *h* is placed at the rear outside the breech casing, between the two gun handles. A forward pressure against its upper end moves the trigger bar *g* to the rear. When the

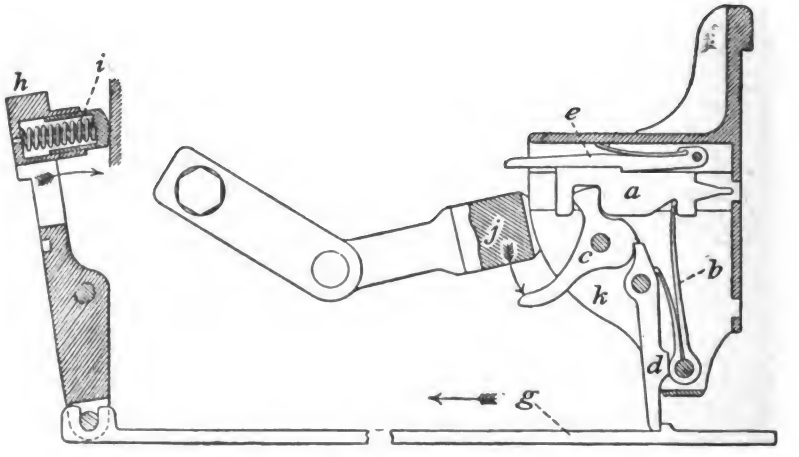

FIG. 313.

trigger is pressed the lug on the trigger bar that engages the sear *d* releases the sear from the notch in the tumbler as the breech mechanism moves forward in closing, and holds it released after the breech is closed. After the release of the sear the firing pin is held back by the safety catch *e*. The link *j* in the last part of its movement upward lifts the projecting end of the safety catch and releases the firing pin, which, under the action of the spring *b*, flies forward and fires the cartridge.

The trigger is constantly pressed to the rear by the spring *i* and is provided with a safety catch to guard against accidental

Digitized by Google

firing. The trigger cannot be pressed forward for firing until the safety catch is lifted.

358. The Water Jacket.—In continuous firing the barrel of an automatic rifle becomes very highly heated and if not cooled in some way may even attain a red heat. The walls of the bore are so softened by the heat that the lands of the rifling are soon worn away and the gun loses its accuracy. The accuracy is completely destroyed after about 1000 rounds fired with the water jacket empty. The necessity of cooling the barrel during firing is therefore apparent, and the gun should never be fired, except in emergency, without water in the jacket.

The water jacket of the Maxim gun holds 12 pints of water. The barrel of the gun is coated with copper on the exterior as a protection against rust. The stuffing boxes through which the barrel passes are packed with asbestos packing.

A steam tube, 89 Fig. 309, is fitted in the upper part of the water jacket to provide a means of escape for the steam that is formed in the water jacket during continuous firing. Near each end of the steam tube is a hole 89 for the admission of steam, and at the front end a hole 99 through both tube and water jacket permits escape of steam to the exterior. The steam tube is surrounded by the tubular valve 96 which slides on the steam tube and closes the forward or rear steam port according as the gun is depressed or elevated, thus preventing the entrance of water into the steam tube while permitting the entrance of steam.

The Cartridge Belt.—The cartridge belt is formed of two pieces of flax webbing connected by brass strips and eyelets between adjacent cartridges, every third strip projecting about an inch beyond the bullet edge of the belt to guide the belt properly through the feed mechanism of the gun. A flat brass handle 4 ins. long is attached to each end of the belt.

Each belt holds 250 cartridges.

The cartridges are quickly and evenly inserted into the belt pockets by means of a small belt-filling machine which is attached to a bench and operated by hand.

Digitized by Google

This gun may be used on either a tripod or wheeled mount. Pack equipment is furnished for transportation.

The Vicker's Machine Gun, Model of 1915.—This is a modification of the Maxim gun described above made for the purpose of reducing the weight. The action of the mechanism is essentially the same as in the Maxim gun except that the lock and connected parts are reversed; that is, what was at the top in the Maxim gun is at the bottom in the Vickers gun. Various parts are made lighter either by the use of lighter material or by reduction in size of parts. The new gun weighs 38 lbs. with the water jacket full against about three times that weight for the Maxim gun.

359. The Automatic Machine Rifle, Model of 1909.—This is a gas-operated gun of the air-cooled type. A cross-section is shown in Fig. 314.

The rifle weighs about 30 lbs. and is not unlike in appearance an ordinary hand rifle. It is supported when fired by a rest at the muzzle and one at the stock. The muzzle rest consists of two steel legs fastened at the top to the band carrying the front sight and kept spread apart at the proper distance by a collapsible connecting piece. Each leg is pointed and provided with a shield near its lower end to keep it from sinking too far into the ground. The muzzle can, of course, be rested on a parapet, sand bag, or log if desired. The breech rest consists of an elevating screw 25, passing up into the stock 46, and supported by a crossbar 24, connecting two disk-like feet 23, resting on the ground each provided with a spike at the center of its under surface to keep it from slipping. Both rests may be folded up and held parallel to the axis of the rifle during transportation.

Service.—Two men are ordinarily detailed for the service of the rifle, one, who keeps his shoulder against the butt of the stock to aim and fire it, and the other to feed into the rifle the cartridges in feed strips, containing 30 cartridges each. These strips are fed in from the right side through a slot in the receiver. With two men serving the rifle the maximum rate of fire is about 600 shots per minute. If the rifle is served by one man only the maximum rate of

Digitized by Google

fire is about 175 shots per minute. Single shots may be fired from the rifle if desired.

As the gun weighs but 30 lbs. it can be transported readily for short and medium distances by one man. Each strip contains 30 cartridges; ten strips are packed in a box. Sixteen of these boxes containing 4800 cartridges in all are supposed to accompany each gun. For transportation two guns with an extra barrel for each and four boxes containing 1200 cartridges are packed on a mule. Other mules carry the remaining ammunition.

A brief description of the arm and the method of its operation is as follows:

Parts.—The principal parts of the rifle are the barrel 14, Fig. 314, or receiver 1, breech block 64, breech locking nut 78, firing pin 52, extractor 63, ejector, sear 68, stock 46, and actuator 8. The barrel is air cooled, the front part of it being knurled and the rear part covered with projecting concentric rings to increase the radiation

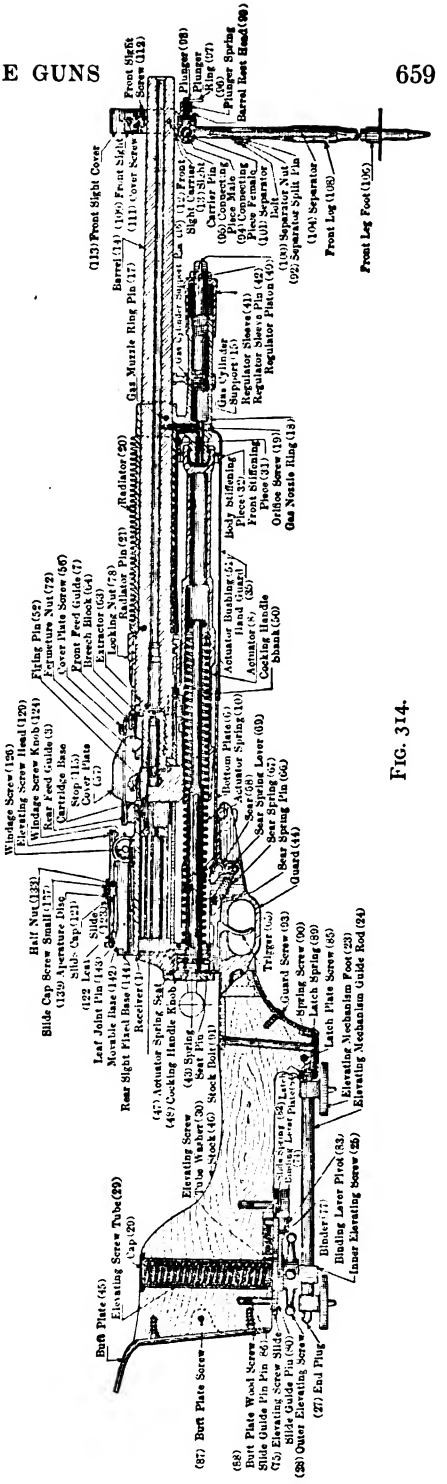

FIG. 314.

Digitized by Google

from its surface. The rear end of the barrel fits into the front end of the receiver. A locking nut 78, held to the rear end of the barrel by a shoulder and free to rotate thereon screws over the projecting front end of the receiver holding barrel and receiver firmly together. The receiver contains the breech block 64, breech locking or fermeture nut 72, firing pin 52, extractor 63, and ejector; its lower part forms a housing for the rear part of the actuator 8, and the actuator spring 10. The front part of the actuator is covered by a hand guard 35, attached to the front of the receiver. The stock 46, and guard 44, are attached to the receiver, and the receiver and guard contain the sear 68, the sear spring 67, and the trigger 65.

Gas Operation.—The rifle is operated by the pressure of the powder gases against the front end of the actuator 8, which lies under the receiver and barrel, parallel to the latter. Just in front of the actuator is a gas cylinder from which a channel leads to the inside of the barrel and an offset from this channel leads to the front end of the actuator. The gas cylinder can be partly filled up by screwing a plug called the regulator piston, 40, into it from the front. Part of the gas from the inside of the barrel flows into the gas cylinder and a part impinges upon the actuator. By diminishing the volume of the gas cylinder by screwing in the regulator piston the amount of gas impinging on the actuator may be increased, and vice versa.

360. Actuator.—The appearance of the actuator 8 is not unlike that of the nozzle of a hose. It is hollow throughout except where a diaphragm separates the interior of the front part against which the powder gases impinge from the interior of the part behind the diaphragm which covers the front part of the actuator spring 10. The pressure of the gases on the diaphragm at the front of the actuator forces it to the rear compressing the actuator spring 10 between a bushing 51 screwed into the interior of the actuator and the actuator spring seat 47 screwed into the rear of the lower part of the receiver.

Fermeture Nut and Breech Block.—The breech locking, or fer-

Digitized by Google

meture nut, 72, has cut on its inner surface a number of interrupted threaded sectors. It is free to rotate in the receiver, but is prevented from moving longitudinally by a shoulder on the barrel in front and one on the receiver at its rear. A lug on its under side engages in a groove on the upper surface of the actuator. This groove in the actuator 8, is inclined to the axis of the rifle for a short distance and is then straight. As a result of the engagement of the lug on the breech locking nut in this groove the nut is rotated clockwise to its unlocked position during the first part of the movement of the actuator in recoil and counter-clockwise to its locked position during the last part of the movement of the actuator in counter-recoil. The breech block 64 has cut on its front end interrupted threaded sectors which correspond to those of the breech-locking nut so that when the latter is rotated counter-clockwise its threads engage with those of the breech block, which cannot then move to the rear. When the breech-locking or fermeture nut is rotated clockwise by the actuator the breech block is free to recoil, being guided by lugs engaging in grooves in the side walls of the receiver.

Firing Pin.—The firing pin 52 can move longitudinally in the breech block for a certain distance. It has two lugs on it. One of the lugs is at the bottom of the pin and projects through a slot in the breech block, being held by two lugs on the upper surface of the actuator, one in front of it and one in rear. The firing pin must, therefore, always move back and forth with the actuator. The second lug is on the upper surface of the firing pin and projects through a a slot cut in the upper surface of the breech block; it works in a groove cut in the upper surface of the receiver. This groove is straight except for a short length where it is inclined to the axis of the rifle. As the actuator moves to the rear during recoil the firing pin moves with it, its upper and lower lugs moving in the slots in the breech block which has not yet commenced to move.

During this time, however, the breech-locking nut is being rotated clockwise to unlock and release the breech block. Imme-

Digitized by Google

diately after the breech block has been unlocked the upper lug on the firing pin reaches the inclined part of the groove in the receiver and is rotated counter-clockwise, the slot in the upper surface of the breech block being widened at the rear for this purpose. When the lug on the firing pin is rotated into the widened part of the slot in the breech block it locks the latter to the actuator for the slot in the block does not extend to the rear beyond this point. Further movement to the rear of the actuator, therefore, carries the breech block with it. The extractor, attached to the breech block, withdraws the empty cartridges case, the head of which soon strikes an ejector carried in the right wall of the receiver. The impact of the case against the ejector causes the case to be thrown out through an opening in the left wall of the receiver.

361. Feed Arm.—A feed arm is mounted on a short vertical shaft on the right side of the receiver. On the lower end of this shaft are two arms projecting in towards the actuator. During the recoil of the actuator an inclined surface on its right side strikes one of these arms rotating the shaft and feed arm from right to left. The feed arm is forced downward by a spring so as to engage in one of a number of holes in the center of the feed strip which is inserted into the gun between the front and rear feed guides, 7 and 3, Fig. 319. These holes are formed in the manufacture of the strips, by punching in the strips clips or tongues, which are bent over the cartridges to hold the latter to the strips. On each strip are punched three rows of clips, which hold the cartridges to the strip, two to one side and the third on the other side of each cartridge. As the vertical shaft is rotated from left to right the end of the feed arm moves the strip through the guide a sufficient distance to place a new cartridge in front of the breech block.

Operation.—If the rifle is arranged for single fire the sear 68 will catch in the notch in the bottom of the actuator so that the latter cannot return to the front until the trigger is pulled. If the rifle is arranged for automatic fire the actuator at the end of recoil is immediately returned to the front by the actuator spring. As the actuator returns it carries the breech block and firing pin with it,

Digitized by Google

the lug on the upper surface of the firing pin sliding in the straight part of the groove in the upper surface of the receiver. When this lug reaches the inclined part of the groove it is rotated clockwise, coming into that part of the slot in the upper surface of the breech block that extends to the front. Further movement of the actuator, therefore, moves the firing pin without moving the breech block, since the lug on the firing pin now slides forward in the slot in the block. During the latter part of the movement of the block to the front, the cartridge is pushed into the chamber and the groove in the head is engaged by the extractor. After the block has ceased to move to the front and while the firing pin is still being carried forward by the actuator the inclined part of the groove on the top surface of the actuator comes in contact with the lug of the breech-locking nut, rotating the latter counter-clockwise and engaging its threads with those of the breech block. At the nstant the breech block is completely locked the point of the firing pin reaches the primer and fires the cartridge. The operations already described being then repeated.

During the forward movement of the actuator another inclined surface on its side strikes the second arm on the bottom of the vertical shaft, carrying the feed arm, rotating the latter from left to right until it engages in the hole next behind (to the right of) that which it formerly engaged so that on the next rearward movement of the actuator the feed piece will be in position to again advance the strip through the feed opening in the receiver until another cartridge is opposite the chamber. The feed arm is beveled on its end so that it can readily move the strip to the left but will offer little resistance to being moved to the right over the strip. The spring which acts on the feed arm is divided and a part of it forming a finger engages in one of a number of holes in a row near the front edge of the strip and holds it from moving while the feed arm is moved to the right. The pressure of this part of the spring is, however, not so great as to interfere with the feeding of the strip into the receiver when the feed arm moves to the left. The holes in which the finger of the spring engages are those formed by

Digitized by Google

punching clips in the strips, in this case to hold the forward ends of the cartridges in place.

When all the cartridges of a strip are fired the action of the spring on the feed arm is to force it downward since it is no longer held up by the strip. The vertical shaft to which it is attached has a vertical play in its bearings so that it is forced downward also. This brings one of the arms at its lower end in front of a shoulder on the actuator and holds the actuator to the rear even though the trigger be pulled or the rifle is set for automatic firing. This arrangement serves two useful purposes. It notifies the man firing the rifle when all the cartridges in a strip have been fired, and it prevents the firing to be continued without cocking the piece by hand every time a new strip is inserted. The feed arm is raised slightly when the new strip is inserted and the actuator is held back by the sear, but the finger also must be removed from the trigger since raising the feed arm raises the arm on the lower end of the vertical shaft and removes it from the shoulder on the actuator.

362. To Cock for First Shot.—To cock the rifle for the first shot the cocking piece 50 is provided. This consists of a rod, with a handle 48 and a disk at its rear end, projecting through the guard, and the actuator spring and nut inside the actuator, and furnished at its forward end with two lugs. By pulling on the handle the cocking piece is drawn to the rear and the lugs at its front end bearing against the nut on the inside of the actuator cause the latter to move to the rear until the sear catches in the notch on its under side.

Kinds of Fire.—The rifle is set at safety or for automatic or single fire as follows: The trigger 65, and sear 68, are of the ordinary type and the trigger when pulled ordinarily moves directly to the rear. A horizontal arm projects to the rear from the trigger; hence, if the rifle is set for safety this arm will strike the disk on the cocking piece before the sear is revolved to the rear out of its notch in the under side of the actuator so that the rifle cannot be fired. To set the rifle for safety the cocking piece is revolved until the letter "S" on the disk is opposite the arrow marked on the rear of the guard.

Digitized by Google

By turning the cocking piece until the letter " A " on the disk is opposite this arrow a slot in the disk is brought opposite the rearward projecting arm of the trigger so that it may project through this slot and allow the trigger to be pulled and held far enough to the rear to keep the sear away from the notch in the actuator and permit continuous fire so long as cartridges are fed into the rifle. By turning the cocking piece until the letter " R " on the disk is opposite the arrow a second slot will be brought opposite the rearward projecting arm of the trigger, but this slot is shallower than the first and its upper surface is beveled downward and to the rear. This will permit the arm of the trigger to project through it as the trigger is pulled to the rear but will force the arm downward when this is done. As the arm is rotated downward the part of the trigger that engages the sear will slip off its end, but before this occurs the sear will be moved out of the notch in the actuator and the rifle will be fired. The sear being now released from the trigger it will be rotated to the front by the action of the sear spring and will catch and hold the actuator on its return to the rear. The trigger being out of engagement with the sear the rifle cannot again be fired until the pressure on the trigger is removed, when the trigger will move forward and its front end will re-engage the sear. Another pull on the trigger will again fire the rifle, again release the sear, and so on. The part of the trigger that engages the sear has a hook that slips off the sear when the rear of the trigger is sufficiently depressed. The front of this hook is beveled so that when the trigger is released and moves to the front under the action of the spring, which acts both on the sear and on the trigger, the hook will rise over the end of the sear and re-engage it.

Two small projections on the front of the disk of the cocking piece rest in notches cut in the rear of the actuator seat inside the receiver. Two notches correspond to the safe position, two to the position for automatic fire, and two to the position for single fire. These notches hold the disk firmly against accidental rotation The cocking piece being always urged to the front by the actuator spring acting on it through the nut inside the actuator and the lugs

Digitized by Google

on the front end of the cocking-piece rod, the projections on the disk press firmly into the notches in the actuator seat and the cocking piece must be drawn slightly to the rear to free the projections from these notches before the disk can be turned.

The sights provided for this rifle are similar to those on the Springfield rifle. The telescopic sight, model of 1908, is also provided for this rifle.

The Lewis Machine Gun

363. The Lewis Machine Gun.—This gun, designed by Col. I. N. Lewis, U. S. A., Retired, is a gas-operated gun of the air-cooled type. It is being used largely by the British army as their type of light machine gun, their heavy type being the Maxim. It is shown in Fig. 315.

Air Cooling.—The distinguishing feature of this gun is the cooling system. Surrounding the barrel is a jacket of aluminum extended by fins placed lengthwise on the barrel to a diameter of about $3\frac{1}{2}$ ins. A steel jacket, open at the rear end and somewhat contracted at the front end fits over the fins and extends beyond the muzzle. The gases issuing from the muzzle for each shot produce a partial vacuum at the front end of this jacket drawing air from the rear end of the jacket over the aluminum fins. In continuous fire, the stream of air drawn through the jacket, together with the high conductivity of aluminum is expected to keep the barrel at sufficiently low temperature so that it will not be damaged.

Operating Parts.—The operating parts of the gun consists of the operating rod which fits in a cylinder under the barrel and in a cylindrical guideway in extension of this in the receiver, the main-spring and gear, which meshing in a rack on the under side of the operating rod, gives forward motion to the parts, the firing pin, fitted into a lug called the operating post on the operating rod, the bolt, the magazine, and the feed-operating arm. In firing, motion to the rear is given to the operating rod by venting the barrel near the muzzle into an expansion chamber, which also opens into the forward end of the operating rod cylinder through either of the two

Digitized by Google

f this
arked
ining.
o the

r the
arging
post
ich is
cam.
ich is
mag-
r and
sear
g the
g the
n the
When
sition
bolt
bolt
and
gh its
imer.
a the
and
the
ace a

sear
eady
isted
nust

l the

Digitized by Google

on the
press f
piece 1
from t
Th
Spring
vided

363
I. N.
cooled
type o
is show
Ai
cooling
extend
about
contra
muzzle
partial
the rea
fire, th
high c
sufficie
Op
operat
cylind
spring
operat
fitted
bolt, t
to the
the m
forwar

Digitized by Google

holes in the lining of the expansion chamber. The end of this lining extends through the steel jacket of the radiator and is marked "S" and "L" to indicate the small and the large hole in the lining. The letter indicating the hole it is desired to use is turned to the rear and the sleeve is locked by the gas regulator key.

364. Action.—The action of the gun is as follows: For the first shot the operating rod is drawn back by means of the charging handle. During the first part of the motion the operating post moves back through a cam in the bolt and rotates the bolt which is unlocked when the operating post reaches the rear end of the cam. The bolt now moves to the rear with the operating rod which is caught by the sear as it reaches the end of its travel. The magazine is now put on the magazine post on top of the receiver and the gun is ready to be fired. When the trigger is pulled the sear releases the operating rod which moves to the front carrying the bolt with it. The bolt is prevented from turning and allowing the operating post to move forward through its cam by guides in the receiver which engage with the locking lugs on the bolt. When the end of these guides is reached the bolt is in its closed position and when it is turned the locking lugs engage and lock the bolt against motion to the rear. In its forward motion the bolt strikes the rim of a cartridge and pushes it out of the magazine and into the chamber. As the operating post moves forward through its cam, locking the bolt, it carries the firing pin against the primer. The bolt remains locked until the bullet has passed the vent in the barrel. The powder gases then enter the expansion chamber and push the operating rod to the rear, withdrawing and ejecting the fired cartridge and moving the feed operating arm so as to place a new cartridge in front of the bolt.

If the trigger is released before the magazine is empty, the sear catches the operating rod and holds the mechanism open, ready to fire again, upon pulling the trigger. If the magazine is exhausted the bolt closes on the empty chamber and the charging handle must be drawn back and a new magazine put on.

Magazine. The magazine is a stamping with recesses around the

Digitized by Google

outer edge which serve to hold and space the cartridge heads, and as a rack on which the pawls of the feed-operating arm engage. A series of studs space the necks of the cartridges. In the center of the stamping is a cylinder with grooves cut around it, fitting the bullets and guiding the cartridges in two parallel circles. At one point the upper circle joins the lower one and the lower one is run out to the bottom surface of the cylinder so that as the housing is turned with respect to the cylinder the cartridges are fed out one at a time while at the same time cartridges from the upper row are guided into the lower row. A central hole with a keyway is cut in this cylinder, to fit on a post on top of the receiver in such a position that the cartridges will be fed down in front of the bolt as the gun operates. Magazines with one, two or three rows of cartridges can be used on the gun, those with two rows containing forty-eight cartridges being ordinarily furnished.

Feed.—The feed-operating arm is a plate fitting over the same post as the magazine and below it. It extends farther to the rear than the magazine and has cut in its lower surface a groove which causes it to be moved back and forth across the gun by a feed-operating stud attached to the bolt and extending up into this groove. A pawl on the upper surface of the feed-operating arm catches the recesses in the magazine and moves it around as the gun is fired.

The gun complete weighs about 25 lbs. It can be provided with either a stock like a rifle for field work or a spade handle stock where the type of mount permits.

Digitized by Google

TABLES

Digitized by Google

TABLE I.—ATOMIC WEIGHTS

Name.	Symbol.	Atomic Weight.		Name.	Symbol.	Atomic Weight.	
		O = 16	H = 1			O = 16	H = 1
Aluminum	Al	27.1	26.78	Molybdenum	Mo	96.0	95.23
Antimony	Sb	120.2	119.24	Neodymium	Nd	144.3	142.5
Argon	A	39.88	39.56	Neon	Ne	20.2	20.04
Arsenic	As	74.96	74.21	Nickel	Ni	58.68	58.21
Barium	Ba	137.37	136.27	Niobium	Nb	Another name for Columbium	
Beryllium	Be	Another name for glucinum		Niton	Nt	222.4	220.6
Bismuth	Bi	208.0	206.34	Nitrogen	N	14.01	13.9
Boron	B	11.0	10.9	Osmium	Os	190.9	189.38
Bromine	Br	79.92	79.28	Oxygen	O	16.00	15.87
Cadmium	Cd	112.40	111.5	Palladium	Pd	106.7	105.85
Caesium	Cs	132.81	131.75	Phosphorus	P	31.04	30.79
Calcium	Ca	40.07	39.77	Platinum	Pt	195.2	193.65
Carbon	C	12.00	11.9	Potassium	K	39.10	38.79
Cerium	Ce	140.25	139.0	Praseodymium	Pr	140.6	139.48
Chlorine	Cl	35.46	35.17	Radium	Ra	226.4	224.1
Chromium	Cr	52.0	51.58	Rhodium	Rh	102.9	102.08
Cobalt	Co	58.97	58.4	Rubidium	Rb	85.45	84.77
Columbium	Cb	93.5	92.75	Ruthenium	Ru	101.7	100.9
Copper	Cu	63.57	63.06	Samarium	Sa	150.4	149.2
Dysprosium	Dy	162.5	161.2	Scandium	Sc	44.1	43.75
Erbium	Er	167.7	166.07	Selenium	Se	79.2	78.6
Europium	Eu	152.0	150.8	Silicon	Si	28.3	28.07
Fluorine	F	19.0	18.8	Silver	Ag	107.88	107.02
Gadolinium	Gd	157.3	156.05	Sodium	Na	23.00	22.81
Gallium	Ga	69.9	69.34	Strontium	Sr	87.63	86.93
Germanium	Ge	72.5	71.9	Sulphur	S	32.07	31.82
Glucinum	Gl	9.1	9.03	Tantalum	Ta	181.5	179.6
Gold	Au	197.2	195.63	Tellurium	Te	127.5	126.49
Helium	He	3.99	3.93	Terbium	Tb	159.2	158.
Holmium	Ho	163.5	162.2	Thallium	Tl	204.0	202.38
Hydrogen	H	1.008	1.00	Thorium	Th	232.4	230.57
Indium	In	114.8	113.8	Thulium	Tm	168.5	166.8
Iodine	I	126.92	125.91	Tin	Sn	119.0	118.05
Iridium	Ir	193.1	191.56	Titanium	Ti	48.1	47.7
Iron	Fe	55.84	55.406	Tungsten	W	184.0	182.54
Krypton	Kr	82.92	82.34	Uranium	U	238.5	236.6
Lanthanum	La	139.0	137.9	Vanadium	V	51.0	50.65
Lead	Pb	207.10	205.45	Xenon	Xe	130.2	129.16
Lithium	Li	6.94	6.88	Ytterbium	Yb	172.0	170.73
Lutecium	Lu	174.0	172.5	Yttrium	Yt	89.0	88.3
Magnesium	Mg	24.32	24.12	Zinc	Zn	65.37	64.85
Manganese	Mn	54.93	54.4	Zirconium	Zr	90.6	89.88
Mercury	Hg	200.6	198.41				

Digitized by Google

TABLE II.—PHYSICAL PROPERTIES OF CERTAIN GASES AT 0° C. AND 760 mm. PRESSURE

Gas.	Formula.	Density, Air = 1.	Pounds per Cubic Foot.	Cubic Feet Per Pound.
Acetylene	C_2H_2	0.92	.07254	13.78
Air	*	1.000	.08071	12.390
Ammonia	NH_3	0.597	.04818	20.766
Bromine	Br_2	5.524	.44584	2.243
Carbon dioxide	CO_2	1.5291	.12341	8.103
Carbon monoxide	CO	0.9672	.07807	12.809
Chlorine	Cl_2	2.491	.20105	4.999
Coal gas		0.504	.04065	24.60
Cyanogen	C_2N_2	1.806	.14522	6.886
Ethane	C_2H_6	1.0494	.08470	11.806
Ethylene	C_2H_4	0.9784	.07898	12.661
Fluorine	F_2	1.26	.1059	9.443
Hydrobromic acid	HBr	2.71	.2258	4.429
Hydrochloric acid	HCl	1.2684	.10237	9.768
Hydrofluoric acid	HF	0.7126	.05581	17.918
Hydriodic acid	HI	4.4172	.35655	2.805
Hydrogen	H_2	0.0696	.005621	177.904
Hydrogen sulphide	H_2S	1.1895	.09508	10.517
Methane	CH_4	0.5576	.04470	22.371
Nitric oxide	NO	1.0367	.08367	11.952
Nitrous oxide	N_2O	1.5298	.12347	8.099
Nitrogen	N_2	0.9673	.07807	12.809
Nitrogen dioxide	NO_2	1.5906	.12839	7.789
Nitrogen tetroxide	N_2O_4	3.1812	.25679	3.894
Oxygen	O_2	1.053	.08922	11.208
Steam (at 100° C.)	H_2O	0.469	.0363	27.548
Sulphur dioxide	SO_2	2.2639	.18271	5.473
Water gas		0.684	.05528	18.09

* Dry atmospheric air has approximately the following composition by weight:

Nitrogen	75.5%
Oxygen	23.2%
Argon	1.3
Carbon dioxide	0.05 to 0.4
Rare gases	0.034

Digitized by Google

TABLE III.—SPECIFIC HEATS

SOLIDS

Name.	Formula.	Molecular Weight.	Specific Heats Referred to	
			One Gram.	Molecular Weight.
Sulphur (fused)	S_2	64	0.203	12.8
Phosphorus	P_4	124	0.190	11.8
Arsenic	As_2	150	0.081	12.1
Antimony	Sb_2	244	0.051	12.4
Carbon	C_2	24	0.202	4.8
Mercury	Hg	200	0.033	32.56
Lead	Pb_2	414	0.031	13.2
Silver	Ag_2	216	0.057	12.4
Magnesia	MgO	40	0.244	9.76
Chromic oxide	Cr_2O_3	152.8	0.190	29.00
Aluminum oxide	Al_2O_3	103	0.217	22.40
Ammonium chloride	NH_4Cl	53	0.373	20.00
Potassium chloride	KCl	74.6	0.173	12.89
Sodium chloride	NaCl	58.5	0.214	12.5
Barium chloride	$BaCl_2$	207	0.090	18.6
Calcium chloride	$CaCl_2$	111	0.104	18.4
Silver chloride	AgCl	143	0.091	13.1
Potassium sulphide	K_2S	110	0.091	19.00
Sodium sulphide	Na_2S	78	0.091	19.00
Iron sulphide	FeS	88	0.136	11.94
Potassium ferro cyanide	$K_4Fe(CN)_6$	430	0.280	118.00
Potassium nitrate	KNO_3	101.1	0.239	24.20
Sodium nitrate	$NaNO_3$	85	0.278	23.70
Barium nitrate	$Ba(NO_3)_2$	261	0.150	38.00
Strontium nitrate	$Sr(NO_3)_2$	211	0.180	38.00
Lead nitrate	$Pb(NO_3)_2$	330	0.110	36.4
Silver nitrate	$AgNO_3$	170	0.143	24.4
Ammonium nitrate	NH_4NO_3	80	0.455	36.4
Potassium sulphate	K_2SO_4	174	0.190	33.2
Sodium sulphate	Na_2SO_4	142	0.229	32.4
Calcium sulphate	$CaSO_4$	136	0.180	25.4
Strontium sulphate	$SrSO_4$	183.5	0.140	24.8
Copper sulphate	$CuSO_4$	159.5	0.134	21.4
Potassium bichromate	$K_2Cr_2O_7$	294	0.187	36.4
Potassium carbonate	K_2CO_3	138	0.210	30.0
Sodium carbonate	Na_2CO_3	106	0.270	29.0

Digitized by Google

TABLE III—*Continued*

Name.	Formula.	Molecular Weight.	Specific Heats Referred to	
			One Gram.	Molecular Weight.
Calcium carbonate	$CaCO_3$	100.	0.200	21.0
Barium carbonate	$BaCO_3$	197.	0.110	21.4
Lead carbonate	$PbCO_3$	260.	0.141	39.4
Potassium chlorate	$KClO_3$	122.5	0.210	25.7
Potassium perchlorate	$KClO_4$	138.5	0.190	26.3
Water	H_2O	18.	1.000	18.0
Nitric acid	HNO_3	63.	0.445	28.0
Sulphuric acid	H_2SO_4	98.	0.340	33.4
Benzene	C_6H_6	78.	0.440	34.0
Alcohol	C_2H_5OH	46.	0.595	27.3
Glycerine	$C_3H_5(OH)_3$	92.	0.591	54.4
Antimony oxide	Sb_2O_3	287.2	0.090	25.85
Silica	SiO_2	60.3	0.195	11.76

TABLE IV.—SPECIFIC HEATS

GASES

Gas.	Formula.	Molecular Weight.	Specific Heat.		Specific Molecular Heat.		
			Constant Pressure.	Constant Volume.	Constant Pressure.	Constant Volume.	Difference.
Air	.....	.....	0.238	0.168			
Ammonia	NH_3	17	0.508	0.391	8.64	6.65	1.99
Carbon dioxide	Co_2	44	0.187	0.172	8.23	6.34	1.91
Carbon disulphide	CS_2	76	0.157	0.131	11.92	9.99	1.93
Carbon monoxide	CO	28	0.245	0.174	6.85	4.86	1.99
Chlorine	Cl_2	71	0.121	0.093	8.59	6.60	1.99
Ethylene	C_2H_4	28	0.404	0.324	11.31	9.07	2.24
Hydrochloric acid	HCl	36.5	0.185	0.130	6.73	4.76	1.97
Hydrogen	H_2	2	3.410	2.411	6.82	4.82	2.00
Hydrogen sulphide	H_2S	34	0.243	0.184	8.27	6.26	2.01
Methane	CH_4	16	0.592	0.468	9.47	7.49	1.98
Nitric oxide	NO	30	0.232	0.165	6.95	4.95	2.00
Nitrogen	N_2	28	0.243	0.173	6.83	4.84	1.99
Nitrous oxide	N_2O	44	0.226	0.181	9.94	7.96	1.98
Oxygen	O_2	32	0.218	0.155	6.96	4.96	2.00
Sulphur dioxide	SO_2	64	0.154	0.123	9.86	7.87	1.98
Water vapor	H_2O	18	0.480	0.370	8.64	6.66	1.98

Digitized by Google

TABLE V.—HEATS OF FORMATION FROM THE ELEMENTS AT 15° C. AND ATMOSPHERIC PRESSURE, 760 MM.

Substance.	Formula.	Molecular Wt.	Density Water = 1 or Air = 1	Melting-point Centigrade.	Boiling-point Centigrade under 1 Atmosphere unless Otherwise Specified.	Heat Given Off (Large Calories), the Product Being.			
						Gaseous.	Liquid.	Solid.	Dissolved.
Acetaldehyde (aldehyde)	$CH_3.CHO$	44	.80	−125	21	51.1	57.1	.....	60.7
Acetanilide	C_6H_5NO	135	1.21	−120	304	.....	.....	54.1	
Acetone	$CH_3.CO.CH_3$	58	.80	− 95	56	58.8	66.3	.....	68.8
Acetylene	C_2H_2	26	.91 (gas)	− 82	.....	−58.1	64		
Aluminum oxide	Al_2O_3	102	3.75	.....	.....	.....	.....	380.2	
Ammonia	NH_3	17	0.59 (gas)	−77	−38	12.2	16.6	.....	21.0
Ammonium carbamate	$CO_2N_2H_6$	78	.....	subl.	.....	.....	.....	158.0	
Ammonium carbonate	$(NH_4)_2CO_3$	96	.....	.....	.....	.....	.....	.....	221.6
Ammonium chloride	NH_4Cl	53.5	1.52	.....	.....	.....	.....	76.7	72.7
Ammonium nitrate	$(NH_4)NO_3$	80	1.71	166	200 app.	.....	.....	88.6	82.4
Ammonium picrate	$C_6H_2(NO_2)_3O.NH_4$	246	.....	.....	.....	.....	.....	81.9	73.2
Ammonium sulphide	$(NH_4)_2S$	68	.....	.....	.....	.....	.....	.....	56.8
Amyl alcohol	$CH_3(CH_2)_4.OH$	88	.82	.....	138	80.9	91.6	.....	94.4
Amyl nitrate	$C_5H_{10}(NO_2)(OH)$	133	.....	.....	.....	7	71		
Aniline	$C_6H_5.NH_2$	93	1.02	−8	183	.....	−11.2		−11.4
Anisol	$C_6H_5.O.CH_3$	108	.991	.....	152	.....	30.6		
Antimonic oxide	Sb_2O_5	329.2	3.78	300 app.	.....	.....	.....	228.8	
Antimonous oxide	Sb_2O_3	288.4	5.53	.....	subl. 156°	.....	.....	167.4	
Antimony sulphide	Sb_2S_3	336.6	.....	.....	.....	.....	.....	34.4	
Barium chlorate	$BaCl_2O_6$	304.1	.....	.....	.....	.....	.....	175.2	179.7
Barium chloride	$BaCl_2$	208.1	3.70	.....	.....	.....	.....	197.1	199.0
Barium oxide	BaO	153.1	5.5	.....	.....	.....	.....	133.4	161.5
Barium nitrate	$Ba(NO_3)_2$	261.4	3.25	593	.....	.....	.....	227.2	
Benzene	C_6H_6	78	.89	5.58	80.36	−11.3	−4.1	−1.8	
Butane	C_4H_{10}	58	2.046 (gas)	.....	0.6	35.0			
Calcium carbide	C_2Ca	64	2.3	.....	.....	.....	.....	−6.25	
Calcium chloride	$CaCl_2$	110	2.26	780	.....	.....	.....	173.4	190.9
Calcium oxide	CaO	56	3.4	.....	.....	.....	.....	145	153.1
Calcium picrate	$[C_6H(NO_2)_3(OH)]_2Ca$	496	.....	.....	.....	.....	.....	185.4	187.6
Camphene	$C_{10}H_{16}$	136	.879–60°	51	160	.....	.....	27.2	.....

Digitized by Google

Camphor	$C_{10}H_{16}O$	152	.811-205.3°	176.4	209.1	.....	.....	77.7	
Cane sugar	$C_{12}H_{22}O_{11}$	342	1.5881	160	.....	.....	.....	535.6	
Carbon dioxide	CO_2	44	1.5291 (gas)	−57–5.3 atm.	0–36 atm.	94.31	.....	100.3	99.99
Carbon disulphide	CS_2	76	.....	.....	.....	−25.4	−19.0		
Carbon monoxide	CO	28	.967 (gas)	−207–100 mm.	−190	26.1			
Cellulose	$C_{24}H_{40}O_{20}$.	648	1.525	.....	.....	.....	.....	921.6	
Copper picrate	$[C_6H(NO_2)_3(OH)]_2Cu$	519.3	.....	.....	.....	.....	.....	60.4	63.7
***o*-Cresol**	$C_6H_4.CH_3.OH$	108.	1.039	31	.....	.....	.....	56.3	54.2
***m*-Cresol**	$C_6H_4.CH_3.OH$	108	1.033	subl.	.....	.....	.....	55.1	
***p*-Cresol**	$C_6H_4.CH_3.OH$	108	1.033	56	198	.....	50.9	55.7	53.6
Cupric oxide	CuO	79.3	6.43	1064	.....	.....	.....	39.7	
Cuprus oxide	Cu_2O	142.6	5.8	.....	.....	.....	.....	43.8	
Cyanogen	C_2N_2	52	.....	.....	.....	−73.9	−68.5	.....	−67.1
Dextrine	$C_6H_{10}O_5$	162	1.03845	.....	.....	.....	.....	243.6	
Diazobenzolnitrate	$C_6H_4N_2.NO_2.OH$	167	.....	.....	.....	.....	.....	−81.8	
Dibenzyl	$C_6H_5CH_2.CH_2.C_6H_5$	182	.....	52	284	.....	.....	−27.0	
***o*-Dinitrobenzene**	$C_6H_4(NO_2)_2$	168	1.59–18°	117.9	319–773.5 mm.	.....	.....	0.3	
***m*-Dinitrobenzene**	$C_6H_4(NO_2)_2$	168	1.369–80°	90	297	.....	.....	6.8	
***p*-Dinitrobenzene**	$C_6H_4(NO_2)_2$	168	1.625–18°	172	sub.	.....	.....	8.4	
Dinitroglycol	$(C.H.OH.NO_2)_2$	152	.....	.....	.....	.....	66.9		
Dinitronaphthalene	$C_{10}H_6(NO_2)_2$	218	.....	185°	.....	.....	.....	− 5.7	
Diphenyl	$C_6H_5.C_6H_5$	154	.....	70.5	254.9	.....	.....	−33.5	
Diphenylamine	$C_6H_5.NH.C_6H_5$	169	1.158	54	302	.....	−22.2	−25.8	
Ethane	C_2H_6	30	1.036	−172	−89–735 mm.	23.3			
Ethyl acetate	$C_4H_8O_2$	88	0.9238	− 82	77	.....	114.7		
Ethyl alcohol	$C_2H_5.OH$	46	0.8002–0°	−130	78.4	59.8	69.9	.....	72.4
Ethylene	C_2H_4	28	0.9784	−169	−103	−14.6			
Ethyl ether	$C_2H_5.O.C_2H_5$	74	0.736–0°	−112.6	35	62.8	70.5	.....	76.4
Ethyl nitrate	$C_2H_5.ONO_2$	91	1.1123–15°	.....	86.3	.....	49.3	.....	50.3
Formaldehyde	CH_2O	30	1.6 (gas)	−92	−21	25.4	.....	.....	40.4
Glucose	$(CH_2OH)(CHOH)_4CH : O$	180	.....	.....	.....	.....	.....	302.6	300.4
Glycerine (glycerol)	$C_3H_5(OH)_3$	92	1.27–100°	20	290	.....	161.7	165.6	167.1
Glycogen	$C_6H_{10}O_5$	162	.....	.....	.....	.....	.....	228.9	
Glycol	$(CH_2.OH)_2$	62	1.125–0°	11.5	107.5–765 mm.	106.2	112.3	.....	114.0
Guandine	$C(NH)(NH_2)_2$	59	.....	.....	.....	.....	.....	19.2	28.4
Guanidine nitrate	$CH_5N_3.NO_3H$	122	.....	.....	.....	.....	.....	93.5	83.4
Hexahydrobenzol	C_6H_{12}	84	0.76–0°	.....	69–71	.....	46.6		
***n*-Hexane**	C_6H_{14}	86	0.663–17	.....	71.5	.....	57.6		
Hydriotic acid	HI	127.9	4.38 (gas)	−55	−36.7	−6.2	.....	.....	13.2
Hydrobromic acid	HBr	81.0	2.79 (gas)	−88	−68	9.5	.....	.....	29.5

Digitized by Google

TABLE V.—*Continued*

Substance.	Formula.	Molecular Wt.	Density Water = 1 or Air = 1	Melting-point Centigrade.	Boiling-point Centigrade under 1 Atmosphere unless Otherwise Specified.	Heat Given Off (Large Calories), the Product Being.			
						Gaseous.	Liquid.	Solid.	Dissolved.
Hydrochloric acid	HCl	36.5	1.27 (gas)	−112	−83	22.0	.....	.....	39.9
Hydroflouric acid	HF	20	0.713 (gas)	−102	19.4	38.5	45.7	.....	50.3
Hydrogen peroxide	H_2O_2	34	1.499	− 2	84–68 mm.	.....	.....	.....	47.3
Hydrogen sulphide	H_2S	34.0	1.19 (gas)	− 85	−62	4.6	.....	.....	9.2
Hydroxylamine	NH_3OH	33	.....	.....	.....	.....	.....	27.6	23.8
Lead oxide	PbO	221.9	9.0	.....	.....	.....	.....	50.8	
Lead nitrate	$Pb(NO_3)_2$	330.9	4.58	.....	.....	.....	.....	105.4	97.2
Lead picrate	$[C_6H(NO_2)_3(OH)]_2Pb$	661.9	.....	.....	.....	.....	.....	82.2	75.1
Magnesia	MgO	40	3.07–3.65	.....	.....	.....	.....	143.4	
Magnesium picrate	$[C_6H(NO_2)(OH)]_2Mg$	480	.....	.....	.....	.....	.....	172.6	187.3
Mannite	$(CH_2.OH)_2(CHOH)$	182	1.489	166	200	.....	.....	320.3	315.7
Mercuric oxide	HgO	216	11.136	.....	.....	.....	.....	21.5	
Mercury fulminate	$C_2N_2O_2Hg$	284	4.4	186° det.	.....	.....	.....	−62.9	
Mercury picrate	$[C_6H(NO_2)_3(OH)]_2Hg$	656	.....	.....	.....	.....	.....	42.8	38.1
Methane	CH_4	16	.....	−184	−164	18.9			
Methyl alcohol	CH_3OH	32	0.789–0°	−97.8	66–67	53.3	61.7	.....	63.7
Methyl ether	$CH_3.O.CH_3$	46	1.617 (gas)	.....	−23.7	51.4	.....	.....	59.7
Methyl nitrate	$CH_3.O.NO_2$	77	1.182–20°	.....	.....	.....	39.9		
Mononitrobenzene	$C_6H_5(NO_2)$	123	1.2	6	213	−2	+5.1	7.8	
Mononitronaphthalene	$C_{10}H_7(NO_2)$	173	1.331–4°	61	304	.....	−2.2	−6.5	
Mononitrotoluol	$C_6H_4(NO_2)(CH_3$	137	.....	.....	.....	.....	20.1		
Naphthalene	$C_{10}H_8$	128	1.145–4°	79–80	218.2	−27.4	27.4	−22.8	
Nitric acid	HNO_3	63	1.559–0°	−40°	86	34.4	41.6	42.2	48.8
Nitric oxide	NO	30	1.039 (gas)	.....	....−154	−21.6	.....		
Nitric peroxide	NO_2	46	.....	.....	.....	−2.5	+1.8		
Nitroacetanilide	$C_8H_7(NO_2)NO$	180	.....	.....	.....	.....	.....	61.5	
Nitrobenzaldehyde	$C_7H_5(NO_2)O$	151	.....	.....	.....	.....	101.3		
α-Nitrocamphor	$C_{10}H_{15}(NO_2)O$	197	.....	100–101	.....	.....	.....	89.1	
Nitrocamphor (phenol)	$C_{10}H_{15}(NO_2)O$	197	.....	.....	.....	.....	.....	125.2	
Nitrocellulose (octo)	$C_{24}H_{29}(NO_2)_8O_{20}$	1008	.....	.....	.....	.....	.....	700.	

Digitized by Google

Nitrocellulose (ennea)	$C_{24}H_{31}(NO_3)_9O_{10}$	1053						678	
Nitrocellulose (deca)	$C_{24}H_{30}(NO_3)_{10}O_{10}$	1098						651	
Nitrocellulose (endeca)	$C_{24}H_{29}(NO_3)_{11}O_{10}$	1143						624	
Nitroethane	$C_2H_5NO_2$	75	1.0582–13°		113–114-737mm.	31.9	38.8		
Nitrogen monoxide	N_2O	44	1.52 (gas)	−102	−87	−20.6	−18.8		−14.4
Nitrogen pentoxide	N_2O_5	108		30		−1.2	+3.6	11.9	28.6
Nitroglycerine	$(C_3H_5)(NO_3)_3(OH)_3$	227	1.6	12.2	257 expl.		98		
Nitromannite	$[C(NO_3)_2OH]_2[C.NO_3OH]_2[CH.OH]_2$	452	1.604	108	120 expl.			179.1	
o-Nitrophenol	$C_6H_4.NO_2.OH$	139					46.4	50.1	688.2
p-Nitrophenol	$C_6H_4.NO_2.OH$	139						49.2	689.1
Nitrogen sulphide	NS	46				−19.0	−25.4	−32.3	
Nitrogen trioxide	N_2O_3	76				−21.4			−8.4
Nitroguandine	$C(NH)(NH_2)(NH.NO_2)$	104						22.0	
Nitromethane	CH_3NO_2	61	1.1639–0°		101–765 mm.	21.8	28.8		
Ozone	O_3	48			−119°	−30.7			
Phenol	$C_6H_5.OH$	94	1.08	41°	183°		34.5	36.8	34.2
Phenol ether	$C_2H_5.O.C_6H_5$	122					42.2		
Picric acid (trinitrophenol)	$C_6H_2(NO_2)_3(OH)$	229	1.74	122.5	300° expl.			46.8	39.7
Potassium carbonate	K_2CO_3	138.2	2.3	880				278.8	285.3
Potassium chlorate	$KClO_3$	122.6	2.326	334				93.8	83.8
Potassium chloride	KCl	74.6	1.995	790°	subl.			105	100.8
Potassium nitrate	KNO_3	101.1	2.0187	338				119.0	110.7
Potassium oxide	K_2O	94.2	2.56					98.2	165.2
Potassium perchlorate	$KClO_4$	138.6	2.54	610				113.5	101.4
Potassium picrate	$C_6H(NO_2)_3(OH)K$	267.1						110.1	100.1
Potassium sulphate	K_2SO_4	174.2	2.648	1052.°	subl.			344.3	337.7
Potassium sulphide	K_2S	110.2	2.13					102.2	112.4
Propane	C_3H_8	44				30.5			
Propyl alcohol	$C_3H_7.OH$	60	.8066–15°		97.4	68.6	78.6		81.7
Propylene	$CH_2.CH=CH_2$	42	1.498 (gas)		−50.2–749 mm.	−9.4			
Silver oxide	Ag_2O	231.8						7.0	
Silver nitrate	$AgNO_3$	169		218				28.7	23.0
Sodium carbonate	Na_2CO_3	106	2.5	853				270.8	276.4
Sodium chlorate	$NaClO_3$	106.5	2.29	248				84.8	79.2
Sodium chloride	NaCl	58.5	2.16	776				97.3	96.2
Sodium nitrate	$NaNO_3$	85		318				110.7	106.0
Sodium oxide	Na_2O	62						100.9	155.8
Sodium perchlorate	$NaClO_4$	122.5						100.3	96.8
Sodium picrate	$C_6H(NO_2)_3(OH)Na$	251						103.4	97.0
Sodium sulphide	Na_2S	78						88.4	103.2

Digitized by Google

TABLE V.—*Continued*

Substance.	Formula.	Molecular Wt.	Density Water = 1 or Air = 1	Melting-point Centigrade.	Boiling-point Centigrade under 1 Atmosphere unless Otherwise Specified.	Heat Given Off (Large Calories), the Product Being			
						Gaseous.	Liquid.	Solid.	Dissolved.
Starch	$C_6H_{10}O_5$	162	.....	.....	.....	.....	.....	225.9	
Strontium oxide	SrO	103.5	.....	.....	.....	.....	.....	131.2	158.4
Strontium picrate	$[C_6H(NO_2)_3(OH)]_2Sr$	543.5	.....	.....	.....	.....	.....	196.0	196.8
Sulphur dioxide	SO_2	64	.....	−76	−8	69.3	74.7	.....	77.6
Sulphuric acid	H_2SO_4	98	1.85	10	317° −750 mm.	.....	193.0	193.8	210.0
Sulphur trioxide	SO_3	80	.....	18	46	92.0	.....	103.8	141.1
Terpene	$C_{10}H_{16}$	136	.....	.....	158	−5.2	+4.2		
Toluol	$C_6H_5.CH_3$	92	.882 −0°	.....	.....	−5.4	+2.3		
Trimethylene	C_3H_6	42	.....	.....	.....	−17.1	.....	9.2	
Trinitrobenzene, 1–2–4	$C_6H_3(NO_2)_3$	213	.....	121–122	.....	.....	.....	5.5	
Trinitrobenzene, 1–3–5	$C_6H_3(NO_2)_3$	213	.....	214°	.....	.....	.....	+3.3	
Trinitronaphthalene	$C_{10}H_5(NO_2)_3$	263	.....	.....	.....	.....	.....	46.8	39.7
Trinitrophenol	$C_6H_2(NO_2)_3.OH$	229	1.74	122.5	exp.	.....	.....	7.7	
Trinitrotoluol	$C_6H_2(NO_2)_3(CH_3)$	227	.....	.....	.....	.....	.....	80.8	77.2
Urea	$CO.(NH_2)_2$	60	1.323	132	.....	.....	.....	136.8	126
Urea nitrate	$CH_4N_2O.NO_3.OH$	123	.....	.....	.....	.....	.....	70.4	
Water	H_2O	18	1.000	0	100	58.3	69.0	1500.	
Wood meal	$C_{36}H_{72}O_{36}$	1200	.....	.....	.....	.....	.....	84.8	
Zinc oxide	ZnO	81	5.78	.....	.....	.....	.....	102.8	114.3
Zinc picrate	$[C_6H(NO_2)_3(OH)]_2Zn$	521	.....	.....	.....	.....	.....		

Digitized by Google

TABLE VI.—MOLECULAR SPECIFIC HEATS AS A FUNCTION OF TEMPERATURE OF CERTAIN GASES AT CONSTANT VOLUME

t = temperature centigrade

Substance.	Formula.	Molecular Weight.	Mean Molecular Specific Heat. (Small Calories.)
Ammonia *	NH_3	17.03	$6.70+0.0005t$
Carbon dioxide †	CO_2	44.	$6.26+0.0037t$
Carbon monoxide †	CO	28.	$4.80+0.0006t$
Hydrogen †	H_2	2.016	$4.80+0.0006t$
Hydrogen sulphide *	H_2S	34.09	$6.30+0.0005t$
Methane *	CH_4	16.03	$7.10+0.0005t$
Nitric oxide *	NO	30.01	$4.80+0.0006t$
Nitrogen †	N_2	28.02	$4.80+0.0006t$
Oxygen †	O_2	32.	$4.80+0.0006t$
Sulphur dioxide †	SO_2	64.07	$6.26+0.0037t$
Water vapor †	H_2O	18.016	$5.61+0.0033t$

* Bureau of Mines Bulletin, 15.
† Mallard and Le Chatlier.

TABLE VII.—RATIO OF THE SPECIFIC HEATS OF CERTAIN GASES AT ORDINARY TEMPERATURES AND ATMOSPHERIC PRESSURE

The "observed" values given represent the means of the results obtained by numerous experimenters using several different methods. The "theoretical" values are those due to the kinetic theory of gases.

Gas.	Formula.	$k=\frac{C_p}{C_v}$		
		Observed.	Theoretical.	Difference.
Air	.....	1.404	1.400	+0.004
Ammonia	NH_3	1.297	1.333	−.036
Carbon dioxide	CO_2	1.299	1.333	−.034
Carbon monoxide	CO	1.405	1.400	+.005
Hydrogen	H_2	1.404	1.400	+.004
Methane	CH_4	1.315	1.333	−.018
Nitrogen	N_2	1.407	1.400	+.007
Oxygen	O_2	1.403	1.400	+.003
Sulphur dioxide	SO_2	1.259	1.333	−.074
Water vapor	H_2O	1.299	1.333	−.034

Digitized by Google

TABLE VIII.—RATIO OF THE SPECIFIC HEATS OF CERTAIN GASES AT VARIOUS TEMPERATURES

Substance.	Formula.	Temperature Centigrade.	$k=\frac{C_p}{C_v}$	Authority.
Air.....	.....	5 to 14	1.4025	Lummer & Pringsheim
			1.4004	Lummer & Pringsheim
		10–22	1.405	Müller
		" Ordinary Temp."	1.4053	Röntgen
		0°	1.40526	Wüllner
		100°	1.40513	Wüllner
			1.4106	Kaysir
		" Ordinary Temp."	1.3968	Low
		0°	1.4040	Leduc
		100°	1.4031	Leduc
Ammonia.....	NH_3	17–30	1.262	Müller
		0	1.3172	Wüllner
		100	1.2791	Wüllner
		" Ordinary Temp."	1.328	Cazin
Carbon dioxide....	CO_2	4–11	1.2995	Lummer & Pringsheim
			1.300	Lummer & Pringsheim
		"Ordinary Temp."	1.2914	Low
		0°	1.3113	Wüllner
		100°	1.2843	Wüllner
		9.6–33.4	1.265	Müller
			1.277	Masson
			1.292	Lucchi
		" Ordinary Temp."	1.3052	Röntgen
			1.308	Capstick
			1.326	Dulong
			1.319	Leduc
			1.306	Hartmann
		500	1.26	Fürstenan
		" Ordinary Temp."	1.291	Cazin
		0°	1.3190	Leduc
		100°	1.2827	Leduc
Carbon monoxide..	CO	0	1.4032	Wüllner
		100	1.3970	Wüllner
			1.401	Leduc
			1.410	Dulong
			1.413	Masson

Digitized by Google

TABLE VIII.—*Continued*

Substance.	Formula.	Temperature Centigrade.	$k=\frac{C_p}{C_v}$.	Authority.
Hydrogen.....	H_2	0–200	1.396	Regnault
		4–16	1.4080	Lummer & Pringsheim
			1.394	Dulong
			1.405	Masson
			1.419	Hartmann
Methane.....	CH_4	19–30	1.316	Müller
			1.313	Capstick
		100–200	1.315	Masson
Nitrogen.....	N_2	"Ordinary Temp."	1.41	Cazin
			1.405	Masson
		−30 to + 200	1.405	Regnault
Nitric oxide.....	NO	10–170	1.394	Masson
Oxygen.....	O_2	5–14	1.3977	Lummer & Pringsheim
		0–200	1.40	Regnault
			1.402	Dulong
		16–21	1.403	Müller
			1.405	Masson
		"Ordinary Temp."	1.41	Cazin
Water vapor.....	H_{20}	78	1.274	Beyme
		94	1.33	Jaeger
		105	1.305	Makower
		130–250	1.287	Cohen
Sulphur dioxide...	SO_2	"Ordinary Temp."	1.262	Cazin
		16–34	1.256	Müller

Digitized by Google

TABLE IX.—CHARACTERISTICS OF RIGHT PRISMATIC GRAINS FOR DIFFERENT VALUES OF x AND y

$y=\frac{w}{D}$	$x=\frac{w}{L}$ .002	.003	.004	.005	.01	.02	.05	.1
1.	$a=$ 2.002	2.003	2.004	2.005	2.01	2.02	2.05	2.10
	$-n=$ .50150	.50225	.50299	.50374	.50746	.51485	.53659	.57143
	$q=$ .00100	.00150	.00200	.00249	.00498	.00990	.02439	.04762
.5	$a=$ 1.502	1.503	1.504	1.505	1.51	1.52	1.55	1.60
	$-n=$ .33489	.33566	.33644	.33721	.34106	.34868	.37097	.40625
	$q=$ .00067	.00100	.00133	.00166	.00331	.00658	.01613	.03125
.2	$a=$ 1.202	1.203	1.204	1.205	1.21	1.22	1.25	1.30
	$-n=$ .16839	.16924	.17010	.17095	.17521	.18361	.20800	.24615
	$q=$ .00033	.00050	.00066	.00083	.00165	.00328	.00800	.01538
.1	$a=$ 1.102	1.103	1.104	1.105	1.11	1.12	1.15	1.20
	$-n=$ .09274	.09365	.09457	.09548	.10000	.10893	.13478	.17500
	$q=$ .00018	.00027	.00036	.00045	.00090	.00179	.00435	.00833
.05	$a=$ 1.052	1.053	1.054	1.055	1.06	1.07	1.10	1.15
	$-n=$ .04952	.05047	.05142	.05237	.05708	.06636	.09318	.13479
	$q=$ .00010	.00014	.00019	.00024	.00047	.00093	.00227	.00435
.02	$a=$ 1.022	1.023	1.024	1.025	1.03	1.04	1.07	1.12
	$-n=$ .02157	.02244	.02352	.02449	.02932	.03885	.06636	.10893
	$q=$ .00004	.00006	.00008	.00010	.00019	.00038	.00093	.00179

Digitized by Google

TABLE X.—VALUES OF y' CORRESPONDING TO z FOR RIGHT PRISMATIC GRAINS FOR DIFFERENT VALUES OF x AND y

$$x=\frac{w}{L},\quad y=\frac{w}{D}.$$

$y=1.$

z	$x=.002$	$x=.003$	$x=.004$	$x=.005$	$x=.01$	$x=.02$	$x=.05$	$x=.1$
.1	.19016	.19024	.19032	.19041	.19081	.19162	.19405	.19810
.2	.36026	.36038	.36051	.36064	.36128	.36256	.36640	.37280
.3	.51029	.51044	.51059	.51074	.51147	.51294	.51735	.52470
.4	.64029	.64043	.64058	.64072	.64144	.64288	.64720	.65440
.5	.75025	.75038	.75050	.75063	.75125	.75250	.75625	.76250
.6	.84019	.84029	.84038	.84048	.84096	.84192	.84480	.84960
.7	.91013	.91019	.91025	.91032	.91063	.91126	.91315	.91630
.8	.96006	.96010	.96013	.96016	.96032	.96064	.96160	.96320
.9	.99002	.99003	.99004	.99005	.99009	.99018	.99045	.99090
1.0	1.	1.	1.	1.	1.	1.	1.	1.

$y=.5$

.1	.14517	.14526	.14534	.14543	.14586	.14671	.14928	.15355
.2	.28029	.28043	.28058	.28072	.28144	.28288	.28720	.29440
.3	.40536	.40554	.40571	.40589	.40679	.40857	.41393	.42285
.4	.52038	.52058	.52077	.52096	.52192	.52384	.52960	.53920
.5	.62538	.62557	.62575	.62594	.62688	.62875	.63438	.64375
.6	.72034	.72050	.72067	.72084	.72168	.72336	.72840	.73680
.7	.80527	.80541	.80555	.80568	.80637	.80773	.81183	.81865
.8	.88019	.88029	.88038	.88048	.88096	.88192	.88480	.88960
.9	.94510	.94515	.94520	.94525	.94550	.94599	.94748	.94995
1.0	1.	1.	1.	1.	1.	1.	1.	1.

$y=.2$

.1	.11818	.11826	.11835	.18441	.11888	.11976	.12241	.12682
.2	.23231	.23246	.23261	.23277	.23354	.23507	.23968	.24736
.3	.34241	.34259	.34279	.34299	.34397	.34595	.35187	.36174
.4	.44846	.44866	.44888	.44910	.45021	.45242	.45904	.47008
.5	.55048	.55068	.55090	.55113	.55225	.55450	.56125	.57250
.6	.64845	.64863	.64884	.64906	.65011	.65222	.65856	.66912
.7	.74239	.74254	.74272	.74290	.74381	.74561	.75103	.76006
.8	.83229	.83240	.83254	.83267	.83334	.83469	.83872	.84544
.9	.91816	.91822	.91830	.91837	.91874	.91948	.92169	.92538
1.0	1.	1.	1.	1.	1.	1.	1.	1.

Digitized by Google

TABLE X.—*Continued*

$y = .1$

z	$x = .002$	$x = .003$	$x = .004$	$x = .005$	$x = .01$	$x = .02$	$x = .05$	$x = .1$
.1	.10918	.10927	.10936	.10945	.10989	.11078	.11346	.11791
.2	.21631	.21647	.21663	.21678	.21757	.21914	.22384	.23168
.3	.32141	.32161	.32181	.32202	.32304	.32507	.33119	.34137
.4	.42446	.42469	.42492	.42515	.42630	.42861	.43552	.44704
.5	.52548	.52571	.52595	.52619	.52738	.52975	.53688	.54875
.6	.62445	.62468	.62490	.62513	.62626	.62851	.63528	.64656
.7	.72139	.72159	.72178	.72198	.72295	.72491	.73077	.74053
.8	.81629	.81644	.81659	.81674	.81747	.81894	.82336	.83072
.9	.90916	.90925	.90933	.90941	.90982	.91064	.91310	.91719
1.0	1.	1.	1.	1.	1.	1.	1.	1.

$y = .05$

.1	.10468	.10477	.10486	.10495	.10540	.10629	.10898	.11346
.2	.20832	.20848	.20863	.20879	.20958	.21117	.21592	.22384
.3	.31091	.31112	.31133	.31153	.31257	.31464	.32084	.33119
.4	.41247	.41271	.41294	.41318	.41435	.41670	.42376	.43552
.5	.51299	.51323	.51348	.51372	.51494	.51738	.52469	.53688
.6	.61247	.61270	.61293	.61316	.61433	.61666	.62364	.63528
.7	.71091	.71111	.71131	.71151	.71253	.71455	.72063	.73077
.8	.80831	.80846	.80861	.80877	.80954	.81107	.81568	.82336
.9	.90467	.90476	.90484	.90493	.90536	.90622	.90898	.91310
1.0	1.	1.	1.	1.	1.	1.	1.	1.

$y = .02$

.1	.10198	.10207	.10216	.10225	.10270	.10360	.10629	.11078
.2	.20352	.20368	.20384	.20400	.20479	.20639	.21117	.21914
.3	.30462	.30483	.30503	.30524	.30629	.30837	.31464	.32507
.4	.40528	.40555	.40575	.40599	.40718	.40956	.41670	.42861
.5	.50550	.50574	.50599	.50624	.50748	.50995	.51738	.52975
.6	.60527	.60551	.60575	.60599	.60717	.60954	.61666	.62851
.7	.70461	.70482	.70503	.70524	.70627	.70834	.71455	.72491
.8	.80351	.80367	.80383	.80399	80477	.80635	.81107	.81894
.9	.90198	.90207	.90215	.90224	.90268	.90357	.90622	.91064
1.0	1.	1.	1.	1.	1.	1.	1.	1.

Digitized by Google

TABLE XI.—CHARACTERISTICS OF CYLINDRICAL MULTIPERFORATED GRAINS OF SEVEN CYLINDRICAL PERFORATIONS FOR DIFFERENT VALUES OF x AND y

Values of $x=\frac{D}{d}$			Values of $y=\frac{L}{D}$.				
			1.5	2.0	2.5	3.0	3.5
	8	a	.76206	.73602	.72041	.70997	.70254
		n	.12590	.15363	.17123	.18340	.19231
		$-q$	.02248	.01746	.01427	.01207	.01045
	9	a	.75975	.73198	.71532	.70421	.69627
		n	.14526	.17538	.19458	.20789	.21765
		$-q$	.02668	.02077	.01700	.01439	.01248
	10	a	.75647	.72728	.70978	.69812	.68979
		n	.16252	.19470	.21527	.22956	.24006
		$-q$	.03047	.02377	.01949	.01651	.01432
	11	a	.75278	.72249	.70431	.69218	.68352
		n	.17797	.21192	.23370	.24885	.26000
		$-q$	.03390	.02649	.02174	.01843	.01600
	12	a	.74986	.71784	.69925	.68659	.67766
		n	.19184	.22736	.25020	.26611	.27835
		$-q$	.03700	.02896	.02379	.02018	.01756
	13	a	.74549	.71343	.69421	.68138	.67222
		n	.20435	.24127	.26504	.28165	.29390
		$-q$	.03981	.03120	.02565	.02178	.01892

Digitized by Google

TABLE XII.—VALUES OF y' CORRESPONDING TO z FOR CYLINDRICAL MULTIPERFORATED GRAINS OF SEVEN CYLINDRICAL PERFORATIONS FOR DIFFERENT VALUES OF x AND y

$x=8$

z	$y=1.5$	$y=2.$	$y=2.5$	$y=3.0$	$y=3.5$
.1	.07715	.07472	.07327	.07229	.07160
.2	.15611	.15162	.14893	.14713	.14585
.3	.23678	.23064	.22695	.22373	.22269
.4	.31905	.31166	.30726	.30363	.30220
.5	.40325	.39469	.39011	.38649	.38415
.6	.48810	.47955	.47444	.47103	.46860
.7	.57463	.56616	.56123	.55796	.55552
.8	.66165	.65435	.65119	.64699	.64476
.9	.75038	.74456	.74076	.73824	.73621
1.0	.84085	.83628	.83345	.83176	.83023
1.1	.902	.898	.896	.895	.894
1.2	.942	.939	.937	.936	.935
1.4	.983	.982	.981	.980	.980
1.638	1.00	1.00	1.00	1.00	1.00

$x=9$

z	$y=1.5$	$y=2.0$	$y=2.5$	$y=3.0$	$y=3.5$
.1	.07707	.07447	.07291	.07187	.07114
.2	.15264	.15141	.14887	.14662	.14524
.3	.23732	.23071	.22677	.22417	.22228
.4	.32027	.31235	.30762	.30447	.30221
.5	.40294	.39620	.39203	.38743	.38495
.6	.49129	.48213	.47666	.47306	.47044
.7	.57902	.57009	.56475	.56122	.55873
.8	.66804	.65996	.65418	.65187	.64953
.9	.75280	.75170	.74769	.74497	.74307
1.0	.84784	.84516	.84242	.84047	.83907
1.1	.910	.908	.906	.904	.903
1.2	.948	.946	.944	.943	.942
1.4	.988	.987	.986	.985	.985
1.591	1.00	1.00	1.00	1.00	1.00

Digitized by Google

TABLE XII.—*Continued.*

$x = 10$

z	$y=1.5$	$y=2.0$	$y=2.5$	$y=3.0$	$y=3.5$
.1	.07686	.07414	.07249	.07140	.07063
.2	.15601	.15099	.14796	.14595	.14450
.3	.23738	.23048	.22631	.22356	.22157
.4	.32108	.31246	.30748	.30416	.30177
.5	.40608	.39687	.39206	.38770	.38508
.6	.49317	.48373	.47788	.47408	.47131
.7	.58184	.57240	.56697	.56325	.56062
.8	.67205	.66359	.65852	.65518	.65271
.9	.76348	.75718	.75240	.74972	.74777
1.0	.85625	.85157	.84873	.84688	.84547
1.1	.910	.906	.903	.902	.901
1.2	.950	.947	.945	.944	.943
1.4	.988	.986	.985	.985	.984
1.557	1.00	1.00	1.00	1.00	1.00

$x = 11$

z	$y=1.5$	$y=2.0$	$y=2.5$	$y=3.0$	$y=3.5$
.1	.07659	.07376	.07206	.07093	.07012
.2	.15569	.15047	.14761	.14522	.14373
.3	.23719	.23002	.22570	.22316	.22076
.4	.32080	.31226	.30708	.30359	.30113
.5	.40631	.39713	.39139	.38755	.38482
.6	.49440	.48447	.47854	.47457	.47170
.7	.58375	.57422	.56845	.56452	.56177
.8	.67395	.66621	.66094	.65784	.65497
.9	.76740	.76033	.75603	.75303	.75114
1.0	.86125	.85631	.85361	.85167	.850 0
1.1	.920	.916	.914	.912	.911
1.2	.958	955	.953	.952	.951
1.4	.992	.990	.989	.989	.988
1.532	1.00	1.00	1.00	1.00	1.00

Digitized by Google

TABLE XII.—*Continued.*

$x=12$

z	$y=1.5$	$y=2.0$	$y=2.5$	$y=3.0$	$y=3.5$
.1	.07640	.07340	.07166	.07046	.06964
.2	.15554	.14993	.14672	.14451	.14298
.3	.23719	.22919	.22518	.22205	.21995
.4	.32117	.31192	.30663	.30298	.30048
.5	.40744	.39715	.39127	.38724	.38450
.6	.49572	.48513	.47895	.47472	.47193
.7	.58590	.57544	.56953	.56534	.56268
.8	.67777	.66811	.66283	.65913	.65673
.9	.77117	.76487	.75891	.75584	.75400
1.0	.86594	.85955	.85755	.85542	.85459
1.1	.924	.919	.917	.915	.914
1.2	.960	.956	.954	.953	.952
1.4	.995	.993	.992	.991	.991
1.512	1.00	1.00	1.00	1.00	1.00

Digitized by Google

TABLE XIII.—VALUES OF y' CORRESPONDING TO z FOR SINGLE PERFORATED GRAINS AND VALUES OF CHARACTERISTICS OF SAME GRAINS.

$$x = \frac{w}{L}.$$

	z	$x = .002$	$x = .005$	$x = .01$	$x = .02$	$x = .05$
	.1	.10018	.10045	.10090	.10180	.10450
	.2	.20032	.20080	.20160	.20320	.20800
	.3	.30042	.30105	.30210	.30420	.31050
	.4	.40048	.40120	.40240	.40480	.41200
	.5	.50050	.50126	.50249	.50500	.51250
	.6	.60048	.60120	.60239	.60480	.61200
	.7	.70042	.70105	.70210	.70421	.71051
	.8	.80031	.80079	.80160	.80319	.80800
	.9	.90018	.90045	.90089	.90180	.90450
	1.0	1.0000	1.00000	1.00000	1.00000	1.00000
Characteristics.	a	1.002	1.005	1.010	1.02	1.05
	$-n$	.001996	.004975	.009901	.019608	.047619

	z	$x = .08$	$x = .10$	$x = .15$	$x = .20$	$x = .25$	$x = .30$
	.1	.10720	.10900	.11350	.11799	.12250	.12700
	.2	.21280	.21600	.22400	.23198	.24000	.24800
	.3	.31680	.32100	.33150	.34196	.35250	.36299
	.4	.41920	.42400	.43600	.44793	.46000	.47200
	.5	.52000	.52500	.53750	.54977	.56250	.57500
	.6	.61921	.62400	.63600	.64783	.66000	.67200
	.7	.71680	.72122	.73150	.74177	.75250	.76299
	.8	.81279	.81600	.82400	.83171	.84000	.84795
	.9	.90721	.90900	.91350	.91763	.92250	.92702
	1.0	1.00000	1.00000	1.00000	1.00000	1.00000	1.00000
Characteristics.	a	1.08	1.10	1.15	1.20	1.25	1.30
	$-n$	.074064	.09091	.13043	.16705	.200	.23077

Digitized by Google

TABLE XIV.—VALUES OF δ_1/δ FOR TEMPERATURE AND PRESSURE OF ATMOSPHERE 78% SATURATED WITH MOISTURE. (From Artillery Note No. 25.)

Ther. F.°	Barometer 28″	29″	30″	31″	Ther. F.°	Barometer 28″	29″	30″	31″
−20	0.890	0.861	0.831	0.806	41	1.017	0.982	0.951	0.919
−19	0.892	0.863	0.833	0.808	42	1.019	0.984	0.953	0.921
−18	0.894	0.864	0.835	0.809	43	1.021	0.987	0.955	0.923
−17	0.896	0.866	0.837	0.811	44	1.023	0.989	0.957	0.925
−16	0.898	0.868	0.839	0.813	45	1.026	0.991	0.959	0.927
−15	0.901	0.870	0.841	0.815	46	1.028	0.993	0.961	0.929
−14	0.903	0.872	0.843	0.816	47	1.030	0.995	0.963	0.931
−13	0.905	0.874	0.845	0.818	48	1.033	0.997	0.964	0.933
−12	0.907	0.876	0.847	0.820	49	1.035	0.999	0.966	0.935
−11	0.910	0.878	0.848	0.822	50	1.037	1.002	0.968	0.937
−10	0.912	0.880	0.850	0.824	51	1.040	1.004	0.970	0.939
− 9	0.914	0.881	0.852	0.826	52	1.042	1.006	0.972	0.941
− 8	0.916	0.883	0.854	0.827	53	1.044	1.008	0.974	0.943
− 7	0.918	0.885	0.856	0.829	54	1.046	1.010	0.976	0.945
− 6	0.920	0.887	0.858	0.831	55	1.048	1.012	0.978	0.947
− 5	0.922	0.889	0.860	0.833	56	1.050	1.014	0.980	0.949
− 4	0.924	0.891	0.862	0.835	57	1.053	1.016	0.982	0.951
− 3	0.926	0.893	0.864	0.836	58	1.055	1.018	0.984	0.952
− 2	0.928	0.895	0.866	0.838	59	1.057	1.020	0.986	0.954
− 1	0.930	0.897	0.868	0.840	60	1.059	1.022	0.988	0.956
0	0.932	0.899	0.870	0.842	61	1.062	1.025	0.990	0.958
1	0.934	0.901	0.871	0.844	62	1.064	1.027	0.992	0.960
2	0.936	0.903	0.873	0.845	63	1.066	1.029	0.994	0.962
3	0.938	0.905	0.876	0.847	64	1.068	1.031	0.996	0.964
4	0.940	0.907	0.878	0.849	65	1.071	1.033	0.998	0.966
5	0.942	0.909	0.880	0.851	66	1.073	1.035	1.001	0.968
6	0.944	0.911	0.881	0.853	67	1.075	1.037	1.003	0.970
7	0.946	0.913	0.883	0.855	68	1.078	1.040	1.005	0.973
8	0.948	0.915	0.885	0.856	69	1.080	1.042	1.007	0.975
9	0.950	0.917	0.887	0.858	70	1.082	1.044	1.009	0.977
10	0.952	0.919	0.889	0.860	71	1.085	1.046	1.011	0.979
11	0.954	0.921	0.890	0.862	72	1.087	1.048	1.013	0.981
12	0.956	0.923	0.892	0.864	73	1.089	1.050	1.015	0.983
13	0.958	0.925	0.894	0.866	74	1.092	1.053	1.017	0.985
14	0.960	0.927	0.897	0.867	75	1.094	1.055	1.019	0.987
15	0.962	0.929	0.899	0.869	76	1.096	1.057	1.022	0.989
16	0.964	0.931	0.901	0.871	77	1.099	1.059	1.025	0.992
17	0.966	0.933	0.903	0.873	78	1.101	1.062	1.027	0.994
18	0.968	0.935	0.905	0.875	79	1.104	1.064	1.029	0.996
19	0.971	0.937	0.907	0.877	80	1.106	1.066	1.031	0.998
20	0.973	0.939	0.909	0.879	81	1.109	1.068	1.033	1.000
21	0.975	0.941	0.911	0.881	82	1.111	1.071	1.035	1.002
22	0.977	0.943	0.912	0.883	83	1.114	1.074	1.038	1.005
23	0.979	0.945	0.914	0.885	84	1.116	1.076	1.041	1.007
24	0.981	0.947	0.916	0.887	85	1.119	1.079	1.043	1.009
25	0.983	0.949	0.918	0.888	86	1.121	1.081	1.045	1.011
26	0.985	0.951	0.920	0.890	87	1.124	1.083	1.047	1.013
27	0.987	0.954	0.922	0.892	88	1.126	1.086	1.049	1.016
28	0.990	0.955	0.924	0.894	89	1.129	1.089	1.053	1.018
29	0.992	0.958	0.926	0.896	90	1.131	1.092	1.055	1.020
30	0.994	0.960	0.928	0.898	91	1.134	1.094	1.057	1.022
31	0.996	0.962	0.930	0.899	92	1.136	1.096	1.059	1.025
32	0.998	0.964	0.932	0.902	93	1.139	1.099	1.062	1.027
33	1.000	0.966	0.934	0.903	94	1.142	1.102	1.064	1.029
34	1.003	0.968	0.936	0.906	95	1.144	1.105	1.066	1.031
35	1.005	0.970	0.938	0.907	96	1.147	1.107	1.068	1.033
36	1.007	0.972	0.940	0.909	97	1.149	1.110	1.071	1.035
37	1.009	0.974	0.943	0.911	98	1.152	1.112	1.074	1.037
38	1.011	0.976	0.945	0.913	99	1.155	1.115	1.076	1.040
39	1.013	0.978	0.947	0.915	100	1.157	1.117	1.079	1.042
40	1.015	0.980	0.949	0.917					

Digitized by Google

INDEX

A

Accuracy and probability of fire, 482–491
Action of powder in gun, 135–161
Aiming devices, 568–596
  correction for drift, 571
  correction for inclination of trunnion axis, 571
  direct-laying sights, 569
  graduation of sights, 570
  gunner's quadrant, 595
  independent line of sight, 573
    quadrant and, 585
  indirect laying of mobile artillery guns, 576
    graduated scale, 579
    improved panoramic sight, 581
    panoramic sight, 576
    panoramic sight as range finder, 581
    rotating prism, 577
  laying in elevation, 568
  location of sights, 572
  purpose, 568
  quadrant, use of, 584
  range level, 584
  range quadrants for mobile artillery guns, 582
  seacoast guns, 585
    erecting prisms, 586
    telescope, 591
    telescopes, power and field of, 593
    telescopic sight, model 1904, 589
    telescopic sight, model 1912, 592
  seacoast mortars, 594
  sights for mobile artillery, 574
    adjustable or tangent, 574
  telescopic sight, model 1898, 586
Alger, Professor Philip R., ref., 485n.
Amagat's table of co-volume of gases, 59
Ammunition, proof of, 639
Armor, 525–535
  ballistic test of, 531
    characteristic perforations, 531
  bolts, 530
  classification of, 529
  composition of, 526
  gun shields, 533
  Harvey and Krupp, 526
  history of, 525
  manufacture of, 526
    carbonizing, 527
    hardening, 529
    reforging and bending, 529
  perforation of, 461, 481
  -piercing projectiles, 500
  projectiles, and, 492–535
  protection for ships, 532
  shields for 15-pdr. guns, 534
  shields for mobile artillery, 534
Armored motor cars, 419
Artillery, 353–423
  armored motor cars, 419
  classification, 353
    artillery of position, 353
    seacoast guns, 353
    seacoast mortars, 353
  drill cartridges and projectiles, 421
  dummy powder charges, 423
  method of mounting, 354
  mobile, 385–423
    4.7-inch heavy field gun, 398
      carriage, the, 398
      gun limber and caisson, 404

Digitized by Google

Artillery, mobile, 4.7-inch heavy field gun, limber, the, 402
pintle yoke, 399
wheels and trail, 400
guns, 385
high-angle fire field guns, 387
howitzers, 386
howitzers of large caliber, 418
mountains guns, 387
6-in. heavy field howitzer, 404
axle, 412
breech mechanism, 417
cradle, 405
elevating mechanism, 406
firing mechanism, 417
loading position, 406
recoil controlling system, 412
recoil springs and buffer, 405
rocker, 406
shield, 412
sights, 410
top carriage, 405
trail, 412
traveling position, 417
traversing mechanism, 406
3-in. field gun, model 1904, 388
breech mechanism, 389
caisson and other wagons, 397
carriage, 393
cradle, the, 393
firing mechanism, 389
limber, the, 396
rocker, the, 393
safety devices, 391
shield, the, 395
sights, 395
trail the, 394
wheels and axle, 394
3-in. field gun, 1916 model, 398
transportation, 387
range finders for mobile, 608
seacoast guns and mortars, data of, 355
ammunition truck, 383
anti-aircraft guns, 384
balanced pillar mount, 359
Artillery, seacoast guns and mortars, barbette carriages for larger guns, 361–363
barbette carriages for 6-in. guns, 359
base ring; racer; chassis, 375
breech mechanism, 383
characteristics, 355
counter-recoil buffers and springs, 379
cradle, 377
disappearing carriages, 364
elevating mechanism, 379
elevating system, 366
gun-lifting system, 366
masking parapet mount, 359
mortar carriages, 372
operation for firing, 368
pedestal mounts, 356
quick-loading mechanism, 381
railroad mounts, 385
recoil cylinders, 379
recoil system, modification of, 368
retracting system, 367
sighting system, 367
6-inch disappearing carriage, 369
sleigh, 377
traversing mechanism, 379
traversing system, 367
turret mounts, 384
12-in, mortar carriages, 372, 373, 375
sub-caliber tubes, 419
trench mortars, 419
Weldon range finder, 608
Atomic weights, table of, 672
Automatic machine rifle, 1909 model, 658–665
Automatic pistol, .45 caliber, 1911 model, 643–647
Automatic shoulder rifles, 640
Avogadro's law, 53

B

Babbitt, Colonel E. B., 511
Ball cartridge, 633–637

Digitized by Google

Ballistics, exterior, 424–491
accuracy and probability of fire, 482–491
absolute deviation, 483
center of impact, 483
mean absolute deviation, 483
accuracy of guns, comparison of, 490
altitude factor, 432
ballistic coefficient, 430
computation of C without firing, 449
computations of the functions, 440
conditions for 12-in. steel mortar, 475
curvature of earth, 459
curved and high-angle fire, 469
danger range, 466
danger space in coast artillery work, 465
danger spaces, 462
definitions, 424
deflection corrections, 460
due to drift, 460
due to wind, 460
for travel of target, 461
determination of C from firings, 447
deviations due to drift and wind, 482
differential equations of motion, 435
formulas for velocities less than 825 f. s., 468
formulas for whole range, 439
high-angle fire ratios, 470
computation of elements of table, 470
Ingalls' secondary functions, 442
integrating factor, 433
Mayevski's formulas for resistance of air, 429
oblong projectile, motion of, 426
drift, 427
observed ranges, formulas for correction of, 473
perforation of armor, 461, 481
probability curve, 486
characteristics, 487
equation of, 487
probability of fire, 485
probability of hitting any area, 490
probable zones and rectangles, 489
Ballistics, exterior, range board corrections, 452
range correction for change in weight of projectile, 457
for tide, 458
for travel of target, 459
for variations in C, 453
for variations in δ_1/δ, 454
for variations in temperature of powder charge, 458
for variations in V, 456
for wind, 455
range-elevation and range-velocity curves, 473
range table, computation of without firings, 479
range table conditions, 452
range table data for high-angle fire, 471
range table value of C, 434
reducing factor, 433
resistance of air, determination of, 428
solution of equation, 437
table of probability of deviation, 489
trajectory in air, 434
trajectory principle of rigidity of, 445
wind factor, 432
zones in mortar fire, 471
zone velocities, 475
Ballistics, interior, 108–115
action of powder in gun, 135–161
application of formulas, 162–175
burning surface, 129
cylindrical multi-perforated grains, 127
design of a gun, 174
design of powder grain of a given gun, 172
determination of pressure, 160
determination of travel after powder is burned, 154
determination of travel during time powder is burning, 151
differential equation of travel, 151
distribution of energy of powder in gun, 135
early investigation, 109

Digitized by Google

Ballistics, exterior, effect of moisture and volatiles, 115
energy lost to the gun as heat, 144
energy of combustion of nitrocellulose, 111
energy of translation of gun, 137
energy of translation of projectile, 136
energy of translation of unburnt charge and gases, 137
energy remaining in gas, 147
energy used in overcoming passive resistance, 138
ennea-nitrocellulose, 113
gauge maximum pressure, 161
granulation, effect of, 121–134
granulation, forms of, 121
best form of grain, 133
burning grains of different forms, 132
initial burning surface per pound, 123
initial surface of grain, 122
initial volume of grain, 122
measure of progressiveness, 131
mode of burning, 122
number of grains per pound, 123
progressive and degressive granulations, 131
seven perforated, 134
single perforated cylindrical grains, 126
volume burned, 123
volume of one pound of solid powder, 123
Le Duc's formulas, 158
multiperforated cylindrical grains, 156
muzzle velocity, 157
octa-nitrocellulose, 114
pressures, 142
rate of combustion as variable pressures, 118
reduced length of initial air space, 145
reduced length of powder chamber, 145
specific rate of combustion, 116
statement of equations of condition for the problem, 148
total amount of energy converted into work, 139
velocity, determination of, 148
Ballistic test of armor, 531
Ballistic test of projectiles, 522
Base percussion fuse, 549
Battery commander's ruler, 615
Battery commander's telescope, 612
Bayonet, U. S. rifle, 630
Berthelot's principle of initial and final states of heat, 49
Bichel apparatus for measuring gun pressure, 104
Birnie, Colonel Rogers, 225
Blank cartridge, 636
Blank charge, 45
Bomb calorimeter, 47
Bombs, 512
gas, 513
Breech mechanism, 293–314
Bréger, Captain, 85

C

Cannon, primers and fuses for, 536–567
Capped and uncapped projectiles, table of comparatives tests of, 503
Cap, projectile, action of the, 501
Cartridge, bags, 41
ball, 633
blank, 636
body, 634
bullets, 636
case, 633
dummy, 638
guard, 638
head space, 634
powder charge, 636
primer, 635
Cast-iron projectiles, 518
Cast-steel projectiles, 520
Central core igniting charge, 43
Centrigufal fuses, arming resistance of, 555
Centrifugal percussion fuses, 552
Chain and bar shot, 493

Digitized by Google

Characteristics of right prismatic grains for different values of x and y, table of, 684
Charcoal powders, 12
Chemical composition, uses and treatment of metals, 184–204
Chlorate of potash as a detonator, 7
Chronograph, Le Boulengé, 85
adjustments and use, 91
disjunctor, the, 88
measurements of small time intervals, 93
measuring rule, 91
rheostat, 87
targets, 86
Chronoscope, Schultz', 93
Clausius, gas equation of, 58
Closed chamber, temperature of explosion and pressure in, 69–84
measured and theoretical pressures in, 107
quantity of heat at constant volume, 69
Combination fuse, old pattern, 562
Combination time and percussion fuses, 557
Construction of guns, 270–279
Correction for inclination of trunnion axis, 591
Crozier, General William, designs wire guns, 272
Cylindrical multiperforated grains of seven cylindrical perforations for different values of x and y, values of y' corresponding to z for, table of, 688
Cylindrical multiperforated grains of seven cylindrical perforations for different values of x and y, characteristics, table of, 687

D

D'Arcy, Chevalier, experiments in determining pressures, 110
Deflection board for guns, 605
Dehydrating smokeless powder, 27
Density of explosives, 76–78
Depression position finder, Lewis, 600
Swasey, 599
Direct-laying sights, 569
Disappearing gun carriages, 364
Drill cartridges and projectiles, 421
Dummy cartridge, 638

E

Elastic strength of guns, 221–269
Electric primer for guns using separate loading ammunition, 540
Explosion, conditions that influence, 5
effects of, 3
gas evolved, 3
heat given off, 3
potential, 3
reaction, rapidity of, 3
work, 3
exciting cause, 6
Explosives, adiabatic expansion of gases, 65
adiabatic expansion and explosive gases, 68
adiabatic expansion pressure, volume and temperature in, 66
classes of, 2
definitions, 1–3
density of loading, 78
density of, 76
determination of heat at constant pressure, 46–51
British thermal unit, 47
calorie, 47
exothermic and endothermic reactions, 47
initial and final state, 49
molugram, 46
solid products, when formed, 51
theoretical calculations, theory of, 46
thermal unit, 46
expansion, determination of external work of, 63
gases, specific volume, 52

Digitized by Google

Explosives, gases, actual characteristic equations of, 57
and thermodynamics, 52–68
characteristic equation of, 54
mechanical equivalent of heat, 61
modification of laws of perfect, 59
molecular volume, 53
specific heat, 62
general requirements as propelling charge, 8
ballistic requisites, 8
nitrocellulose powder, 9
safety and insensitveness, 8
stability, 9
gravimetric density, 77
heat and, 1
heat and work, determination of relation between, 64
heat at constant pressure, 50
heat, practical determination of quantity of, 47
heats of formation, 49
high, effects of, 5
low, effects of, 5
measurement of volume of gas, 72
potential, 72
pressure in closed chamber, 79
properties, manufacture, care and uses, 1–45
properties of gases, 52
requirements of high, for projectiles, 9
detonation and strength, 9
explosive D, 10
safety and insensitiveness, 9
stability, 10
trinitrotoluol, 10
types used in U. S. service, 10
temperature of explosion, 73
temperature of explosion and pressure in closed chamber, 69–84
temperature when solid products are formed, 75
theory of, 46–84
thermodynamics of gases, 61
two classes, examples of, 4
Explosives, uses of the two classes, 7
Exterior ballistics, 424–491

F

Field artillery, plotter, model 1907, 617
Field guns, projectiles for, 503
Fire control instruments, 597–622
aiming circle, 615
battery commander's ruler, 615
battery commander's telescope, 612
definition, 597
deflection board guns, 605
field artillery plotter, model 1907, 617
Lewis depression position finder, 600
musketry rule, 621
parallax tables, 619
plotting board, model 1915, 601
plotting room, 601
Pratt range board, 602
predictor, 608
prediction-scale, 608
range finders for mobile artillery, 608
range finders, types of, 597
self-contained range finder, 610
set-forward ruler, 608
Swasey depression position finder, 599
time-interval recorder, 608
Weldon range finder, 608
wind-component indicator, 608
Fixed ammunition, primers for, 542
electric primer for, 110-grain, 544
Fixed projectiles, 520
Friction primers for cannon, 536
Fuses for cannon, 546–567
arming resistance of split ring, 550
base percussion, 549
centrifugal, arming resistance of, 555
centrifugal percussion, 552
classification, 546
combination, old pattern, 562
combination time and percussion, 557
detonating, for high-explosive shell, 555
fuse setter, 565
"link lift," centrifugal, 552
mechanical time, 563

Digitized by Google

Fuses for cannon, percussion, 548
percussion plunger, 561
percussion primer of, 547
point percussion, 547
ring resistance, 547
safety position, 561
Semple centrifugal plungers, 553
service combination, 557
shrapnel, combination, for high-explosive, 563
time train, 558
to set, 560
vents, 560

G

Gases and thermodynamics, 52–68
adiabatic expansion, 65, 66, 68
Amagat's table of co-volumes, 59
characteristic equation of actual, 57
co-volume, 59
Gay-Lussac's law, 53
heat and work, determination of relation between, 64
law of Avogadro, 53
Mariotte's law, 53
modification of laws of perfect, 59
pressure of, in closed chamber, 79
physical properties of certain, 673
thermodynamics of, 61
Gatling gun, 648
Gauge pressures, accuracy of, 102
comparison of methods of measuring, 103
dynamic method of measuring, 103
Gay-Lussac's law, 53
Granulation, effect of, 121–134
Grenades, dummy, 512
hand, 510
rifle, 511
Guard cartridge, 638
Gunpowder, brown or cocoa, 12
historical sketch of, 11
smokeless, 12
Guns, 221–314
breech mechanism, 293–314
Guns, breech mechanism, automatic and semi-automatic, 311
Bofors mechanism, 301
characteristics, 293
De Bange obturator, 304
firing mechanism, 306
Krupp sliding wedge, 309
mortars, older form of slotted screw for, 299
new field gun, 314
obturation, 302, 310
obturator, De Bange, 304
Freyre, 306
older form of slotted screw, 298
sliding wedge, 309
slotted screw, for heavy guns, 295
Welin blocks, 300, 301
construction of, 270–279
operations in manufacture, 274
assembling, 277
boring and turning mill, 275
boring tools, 275
gun lathe, 274
machines, 274
rifling the bore, 279
wire guns, 272
elastic strength of, 221–269
application of formulas to gun in action, 251
applied stresses in cylinder, 230
applied stresses, relations between, 228
basic principles of construction, 221
closed cylinder under pressure, 225
compound cylinders, built-up guns, 248
compound cylinders, wire-wrapped guns, 249
compression and expansion due to shrinkage, 259
curves of elastic resistance, 261
distribution of resultant stresses, 232
both interior and exterior pressures, 239
exterior pressures only, 236

Digitized by Google

Guns, elastic strength of, distribution of resultant stresses, interior pressures only, 233
equations, discussion of, 231
Freyre obturator, 306
gun at rest, 255, 266
gun in action, 265
guns composed of three or more cylinders, 263
guns of two cylinders, 250
inner cylinder or tube, 253
Lamé's laws, 228–230
limit of maximum powder gas pressure, 224
limiting interior pressures, 241
limiting value of interior pressure acting alone, 235
maximum tangential strength, 267
outer cylinder or jacket, 251
outside layer of hoops, 264
over-compression of tube, 254
prescribed shrinkage, 260
principal stresses and strains, 225
relation between stress and strain, 222
resultant longitudinal stress, 246
resultant stresses in cylinder, 231
shrinkage, 251
strains perpendicular to direction of applied stress, 222
stresses and strains in closed cylinder, 226
tangential and radial conditions for safety, 247
tangential resultant stress in section, 261
thickness of wall, 235
when resultant radial stress reaches elastic limit, 244
when resultant tangential stress reaches elastic limit, 242
manufacture of steel forgings for, 205
measurements, 280–285
calipers, 284
measuring points, 281
Guns, measurements, necessity of accuracy, 280
standard comparator, 286
star gauge, 283
Vernier caliper, 281
rifling of, 286–292
developed curve of, 289
form of, in army guns, 292
pressure on the lands, 287
purpose; twist, 286
twist, best form of, 288
velocity of translation and rotation, 287
wire-wrapped, elastic strength of, 268
Gun shields, 533, 534

H

Hamilton, Colonel Alston, empirical formula of, 433, 434
Exterior Ballistics, 470
perforation formulas of, 462
Hand arms and small arms, 623–647
ammunition, proof of, 639
accuracy test, 639
bullet jacket, test for stripping of, 640
equipment for accuracy test, 639
pressure test, 639
velocity test, 639
waterproof test, 640
automatic pistol, .45 caliber, model of 1911, 643
ammunition and ballistics, 647
ammunition tests, 647
firing mechanism, 645
magazine, 646
nomenclature of parts, 644
operation in firing, 644
principal parts, 643
safety features, 646
automatic shoulder rifles, 640
ball cartridge, 633–637
bullets, 636
bearing surface, 636
case, 633
head space, 634

Digitized by Google

Hand arms and small arms, ball cartridge, powder charge, 636
primer, the, 635
blank cartridge, 636
deviation; drift, 632
dummy cartridge, 638
gallery practice rifle, 632
guard cartridge, 638
life of the rifle; erosion, 625
requirements, 624
defective cartridge test, 625
dust test, 625
endurance test, 625
excessive charge test, 625
rust test, 625
service small arms, 623
flat trajectories, 623
jacketed bullet, 624
magazine, the, 624
military rifles, 623
U. S. magazine rifle, model 1903, 626
model 1905, aiming device, 631
appendages, 631
bayonet, 630
barrel, 629
cones, 627
rapidity of fire, 630
receiver, 627
sights, 625
trigger, pull, 627
Hastings-Brashear compound erecting prism, 586
Heat, determination of at constant pressure, 46–51
Heats of formation from the elements, table of, 672
High temperature, effect of, on smokeless powder, 38
Howe, Henry Marion, quoted, 202
Howitzers, 404–418
Hutton, Dr. Charles, improves ballistic pendulum, 109

I

Igniting primers, 545
Incendiary projectiles, 512
Indirect laying of mobile artillery guns, 576
Ingalls, Colonel James M., secondary functions, 442
Table II. Artillery Circular M, 445
Initial compression of copper cylinder, 101
Interior ballistics, 108–175
early investigations, 109
energy of combustion of nitrocellulose, 111
method of investigation, 111
scope, 108

L

Lamé's laws, 228–230
Le Duc's formulas, 158
Lewis, Colonel I. N., 666
Lewis depression position finder, 600
Lewis machine gun, 666–668

M

Machine guns, 648–669
automatic machine rifle, 1909 model, 658–665
actuator, 660
feed arm, 662
fermeture nut and breech block, 660
firing pin, 661
gas operation, 660
kinds of fire, 664
operation of, 662
parts, 659
service, 658
to cock for first shot, 664
classification, 648
Gatling, 648
feed, the, 651
operation, 650
Lewis, 666–668
action, 667
air cooling, 666
feed, 668
magazine, 668
operating parts, 666

Digitized by Google

Machine guns, Maxim, 1904 model, 651–657
breech mechanism, 654
cartridge belt, 657
firing mechanism, 656
method of action, 653
recoiling parts, 653
water jacket, 657
Vicker's model of 1915, 658
Mallard and Le Chatelier's method of calculating explosion temperature, 73
Marcel Deprez register, 94
Mariotte's law, 53
Maxim machine gun, 651–657
Mayevski's formulas for resistance of air, 429
Measurements of guns, 280–285
Metals, strength of, 176
Mettagang recorder, 95
Micrometer caliper, 99
Mobile artillery, 385–423
range quadrants for, 582
shields for, 534
Moisture, effect of, on explosives, 37, 38
Molecular specific heats as a function of temperature of certain gases, table of, 679
Motor cars, armored, 419
Mountain and field guns and howitzers, data of, 386

N

Nitrocellulose, boiling processes, 20, 22
pulping process, 22
wringing out the water, 22
cotton, preparation of acid, 17
energy of combustion of, 111
nitrating processes, 19
centrifugal, 20
displacement, 19
raw materials, acid, 16
alcohol, 16
cotton, 15
ether, 17
Nitrocellulose smokeless powder, manufacture of, 14–38
Nitrocelluloses, formation and classification of, 14
Vielle's classification of, 15
Nulton, Commander Lewis M., 225

O

Ogival projectiles, volumes of, 513
O'Hern, Lt. Col. Edward P., quoted, 424
Ordnance construction, metals used in, 176–220
chemical composition of metals, 184-204
allotropic modifications, 191
thermal critical points of pure iron, 191
thermal critical points of steel, 192
alloy steel, 204
cast iron, 193
changes as cooling is continued below solidus, 193
constituents of iron and steel, 188
austenite, 188
pearlite, 189
copper, brass, bronze, aluminum, 184
effect of heat, 189
effect of time, 194
gun steel, 205
hardening, 196
iron and steel, 186
uses, 187
malleable cast iron, 194
microscopic examination of steel, 195
other substances in steel, 204
tempering, 202
uses, 187
chemical requirements, 182
elongation at rupture, 180
metals used in, 176–220
moduli of elasticity, 177
physical qualities of metals, 178
physical requirements, 180
steel forgings for guns, manufacture of, 205–220

Digitized by Google

Ordnance construction, steel forgings for guns, annealing, 218
Bessemer process, 210
casting, 211
crucible process, 210
defects in ingots: blowholes, 212
defects in ingots: pipes, 212
defects in ingots: segregation, 212
duplex process, 210
forging, 215
furnace, the, 207
gas producer, 206
hardening in oil and water, 219
heating, 214
hollow forgings, 216
molds, 211
open-hearth process, 205
operation of furnace, 208
processes after casting, 214
regenerators, 206
sinking head, 211
strength of parts of guns, 220
tempering, 220
Whitworth's process of fluid compression, 213
strength of metals, 176–183
elasticity, 176
elastic limit, 179
stress and strain, 176
tensile strength, 180
testing machine, 183
yield point, 184

P

Panoramic gun sight, 576
use of as range finder, 581
Parallax table, 619
Percussion fuses, 546
Petravel's time-pressure gauge, 105
Physical properties of certain gases, table of, 673
Plotter, field artillery, 617
Plotting room, 601
Powder, action of, in the gun, 135
nitrocellulose, manufacture of, 14–33
Powders, charcoal, 12
manufacture, 13
composition, 12
Powders, smokeless, 13
ballistic test, 37
blending and boxing, 33
comparison of nitroglycerine and nitrocellulose, 13
dehydrating, 27
dry-houses, 32
drying, 31
graining press and cutting machine, 29
high temperature, effect of, on, 38
magazines, 39
storage, 38
macaroni and final blocking press, 29
measurement of grains, 36
physical tests, 36
mixing, 27
moisture and volatiles, determination of, 34
moisture, effect of, 37
preliminary blocking press, 29
principle underlying manufacture of, 22
proof and care of, 34–38
solvent recovery process, 31
stability, special tests for, 34
German tests, 35
KI starch paper test, 34
Ordnance Department 115° C. test, 35
surveillance test at 65.5° C., 35
test for, in service, 35
Pratt range board, 602
Pressure and mean passive resistance, values of, 141
Pressure, Bichel apparatus for measuring, 104
direct measurement as function of time, 103
measured and theoretical, in closed chamber, 107
Pressures, gauge, accuracy of, 102
comparison of methods of measuring, 103

Digitized by Google

Pressures, dynamic method of measuring, 103
Primers, fuses and detonating caps, 6
Primers and fuses for cannon, 536–567
classification, 536
combination electric and percussion, 544
common friction primers, 536
electric elements, 539
electric primers, currents for firing, 540
electric primer for guns using separate loading ammunition, 540
for fixed ammunition, 542
friction elements, 538
friction primers, 536
igniting, 545
percussion, 20, 110
grain, 542, 543
percussion element, operation of, 543
saluting, 20-grain, 544
service combination friction electric primer, 537
Probability of fire, 485
Projectiles and armor, 492–535
armor-peircing, 500
banding, 495
bombs, 512
cap, action of the, 501
carcasses, 493
chain and bar shot, 493
classification, 492
comparative tests of capped and uncapped, table of, 503
for field guns, 503
form of, 497
for seacoast guns, 498
gas bombs, 513
grenades, dummy, 512
grenades, hand, 510
grenades, rifle, 511
Hotchkiss, 495
incendiary, 512
manufacture of, 518–524
ballistic test, 522
cast-iron projectiles, 518
Projectiles and armor, manufacture of, cast steel, 520
common steel shell for mobile artillery, 523
eccentricity, 521
inspection of, 521
painting, 524
pressure test, 521
requirements in, 520
shell, armor-piercing, test of, 523
shot, armor-piercing, test of, 523
shrapnel, common, test of, 524
shrapnel, high-explosive, test of, 524
test for detection of initial strains, 522
modern, 495
old forms of, 492
requirements of high explosives for, 9
sectional density of, 517
gun, effect on the, 518
trajectory, effect on the, 517
shell, high-explosive, 509
shell tracers, 509
shrapnel, common, 503
bursting of, 505
fuse, 507
hits, table of, 507
interval of burst, 506
point of burst, 506
shrapnel, high-explosive, 508
thickness of walls of, 514
volumes of ogival projectiles, 513
weights of, 514
Whitworth, 493
Propelling charges, preparation of, 39–45
blank charge, 45
cartridge bags, 41
flareback, 41
central core and igniting charge, 43
12-in. mortar charges, 44
forms of, 39–41
general requirements, 8
preparation of, 39–45
Properties of gases and thermoydnamics, 52–68

Digitized by Google

Q

Quadrant, gunner's, 595

R

Range board, Pratt, 602
Range corrections, 453–459
Range finders for mobile artillery, 608–611
Range quadrants for mobile artillery guns, 582
Ratio of specific heats of certain gases at ordinary temperatures and atmospheric pressure, table of, 679
Ratio of specific heats of certain gases at various temperatures, table of, 680
Recoil and recoil brakes, 313–352
  air and spring counter recoils compared, 330
  area of orifice, 333
  brake with constant pressure, 335
  brake with variable hydraulic pressure, 334
  connected recoil and counter recoil systems, 328
  constant hydraulic pressure, 334
  counter-recoil mechanism, 327
  counter-recoil buffer, 337
  determination of free recoil, 316
  differential recoil, 338
  horizontal chassis, 335
  horizontal recoil on seacoast carriages, 340
  hydraulic brake with variable orifice, 326
  hydraulic brakes, 325
  hydro-pneumatic recoil systems, 328
  independent recoil and air counter recoil systems, 329
  initial strength of counter recoil springs or air cylinders, 349
  length of recoil and total constant resistance, 322
  length of recoil in artillery of position, 339
Recoil and recoil brakes, length of recoil of guns on wheeled carriages, 345
  maximum velocity of free recoil, 319
  neglected resistances, 337
  pressure, area of orifice, and velocity of recoil, 332
  recoil system of disappearing gun carriages, 343
  recoil systems, 325
  resistance by hydraulic brake, 332
  resistance of counter-recoil spring or air cylinders, 383
  retarded recoil, 321
  stresses on gun carriage, 315
  3-in. field carriage system, 350
  throttling bar, profile of, 336
  total resistance to recoil, 331
  total resistances to recoil constant, 321
  variable recoil, 338
  velocity of free recoil, 315
  velocity of projectile as function of time, 317
  velocity of retarded recoil, as function of time and space, 323
  wheeled carriages, limiting value of total resistance to recoil in, 346
Rheostat, the, 87
Rifle, automatic machine, 1909 model, 658–665
  automatic shoulder, 640
Rifle erosion, 625
Rifling of guns, 286–292
Right prismatic grains for different values of x and y, characteristics of, table of, 682
Right prismatic grains for different values of x and y, values of y' corresponding to z for, table of, 683
Ring resistance fuses, 547
Robins, Benjamin, experiments in musket ball velocities, 109
Rodman, General, devises pressure gauge for measuring gas pressure, 110

Digitized by Google

Rodman, General, discovers principle of progressive combustion of powder, 11
Rumford, Count, determines relation between pressure and density of gases, 110
Sarran's formulas, 111

S

Seacoast guns and mortars, data of, 355
aiming, 585, 594
general characteristics, 356
gunner's quadrant, 595
projectiles for, 498
quadrant for 12-in., 595
telescopic sight, 586
model 1904, 589
model 1912, 592
telescopes, power and field of, 5923
Sebert velocimeter, 97, 316
Semple centrifugal plunger, 553
Semple night shell tracer, 509
Service combination friction electric primer, 537
Service small arms, 623
Shell, armor-piercing, test of, 523
common steel, for mobile artillery, 523
high-explosive, 509
painting, 524
tracers, 509
Shot, armor-piercing, test of, 523
Shrapnel, Colonel, 492
Shrapnel, combination fuse for high-explosive, 563
common, 503
bursting of, 505
fuse, 507
hits, table of, 507
interval of burst, 506
point of burst, 506
test of, 524
high-explosive, 508
test of, 524
Sights for mobile artillery, 574
Siemens open-hearth furnace, 205
Single perforated grains and values of characteristics of same grains, values of y' corresponding to z for, table of, 691
Smokeless powders, 13
calculation of energy per pound, 111–120
dehydrating, 27
manufacture of nitrocellulose, 14–38
principles underlying manufacture of, 22
proof and care of, 34–38
Specific heats, gases, table of, 673
molecular, as function of temperature of certain gases, table of, 679
ratio of, of certain gases at ordinary temperature and atmospheric pressure, table of, 679
ratio of, of certain gases at various temperatures, table of, 680
solids, table of, 672
Split-ring fuses, arming resistance of, 550
Starting pressure and mean passive resistance, table of, 141
Steel forgings for guns, manufacture of, 205–220
Steels, chemical composition of, 182
Strength of metals, 176–183
Sub-caliber tubes, 419
Swasey depression position finder, 599

T

Tarage table, 101
initial compression of copper cylinder, 101
Telescope, battery commander's, model 1915, 612
power and field of view, 593
Telescopic sight for seacoast guns, 586
Temperature of explosion and pressure in closed chamber, 69–84
Temperature of explosion, Mallard and Le Chatielier method, 73
Temperature of explosion when solid products are formed, 75

Digitized by Google

Thermodynamics of gases, 61
Time train of service fuse, 558
Trench mortars, 419
Trauzl lead block test, 106

U

United States magazine rifle, model 1903, 626
  model 1905, sights, 625

V

Values of δ_1/δ for temperature and pressure of atmosphere 78 per cent saturated with moisture, table of, 690
Values of y' corresponding to z for right prismatic grains for different values of x and y, table of, 683
Velocities and pressures, measurement of, 85–107
  accuracy of gauge pressures, 102
  Bichel apparatus, 104
  direct measurement of pressure as function of time, 103
  initial compression of copper cylinder, 101
Velocities and pressures, interior velocities, methods of measuring, 98
  Le Boulengé chronograph, 85
    adjustments and use, 91
    disjunction, 89
    rheostat, the, 87
  measured and theoretical pressures in closed chamber, 107
  Mettagang recorder, 95
  Petravel's time pressure gauge, 105
  pressure in guns, 99
  Schultz' chronoscope, 93
  Sebert velocimeter, 97
  tarage table, 101
  Trauzl lead block test, 106
Vicker's machine gun, model of 1915, 658
Vielle's classification of nitrocelluloses, 15

W

Weldon range finder, 608
Whitworth process of fluid compression, 213
Wire-wrapped guns, elastic strength of, 268

Digitized by Google

Digitized by Google

Digitized by Google

Digitized by Google

Digitized by Google

Digitized by Google

Digitized by Google

Digitized by Google

UNIVERSITY OF MICHIGAN
3 9015 02423 6104

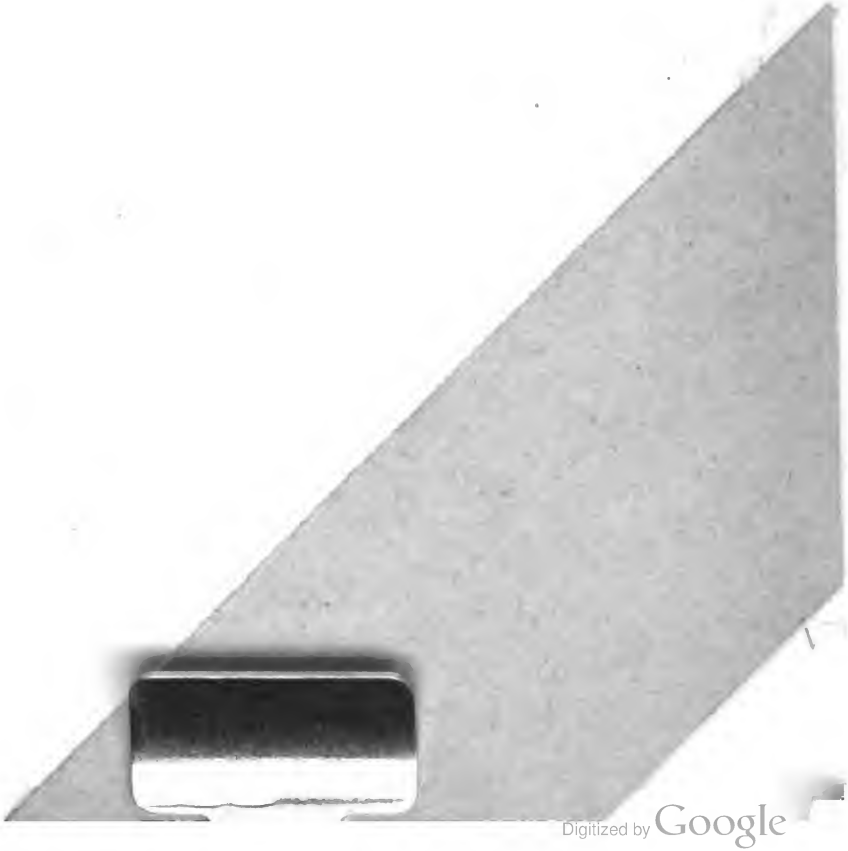

Digitized by Google